Bridge Office Policies and Procedures

BOPP 2014

Nebraska Department of Roads
Bridge Division

Last updated: October 2014

Introduction

Purpose

The "BRIDGE OFFICE POLICIES AND PROCEDURES" manual (BOPP) is intended to serve as a standard or guide for the preparation of plans and specifications for bridges to be constructed in Nebraska. It is to be used for reference by bridge designers to assure consistent application of the Bridge Division's policies and procedures and to achieve uniformity in the preparation of bridge plans. Although this manual's purpose is to clarify NDOR bridge design policies and procedures, it does not preclude exceptions based on sound engineering principles. All bridge designs are the responsibility of the bridge designer and the NDOR Bridge Division cannot accept responsibility for any errors or oversights in the use of this material.

BOPP Format

The BOPP manual starting with the August 12, 2005 version will be in Adobe PDF format as a single file. Chapter 6 Base Sheets will initially be external and linked to the Chapter 6 table of contents. This may change in the future with all Chapter 6 pages included in the main BOPP PDF file.

Page Format

All policies are dated with their origination or first publication date in the lower left corner of the page and the revision date, if any, in the lower left corner. In general, shaded text will be used in the revised portion of any policy or procedure to draw the user's attention and to help make them aware of specific policy changes.

Publication and Maintenance

The Bridge Division shall revise this manual as new policies are initiated or when changes are made to existing policies. It is incumbent on BOPP users to incorporate these revisions immediately, as they are required to employ current policies and procedures in all of their designs.

Consulting Engineers are responsible for all policies in effect when the **Notice to Proceed** is issued for a project.

Consulting Engineers shall be notified by mail and/or e-mail when changes to the manual have been made.

All BOPP users should check the Bridge Division website in order to download the latest version of the manual.

The "Bridge Office Policies and Procedures" PDF file can be downloaded from the Nebraska Department of Roads' website at: http://www.dor.state.ne.us/design/bridge/index.htm#bopp

The Consultant should contact the appropriate Assistant Bridge Engineer if there are concerns regarding the changes and their affect on the scope of the project.

If any BOPP user has a revision or addition they wish to propose, they may use the form at the beginning of this manual entitled "Proposed Revision/Addition to the BOPP Manual". The form is self-explanatory and should be submitted to:

State Bridge Engineer
Bridge Division
Nebraska Department of Roads
1500 Hwy 2
Lincoln NE 68509-4759
(402) 479-4701

BOPP Manual Chapter Listing

Introduction I

BOPP Manual Chapter Listing II

Preliminary Design 1

General Bridge Design 2

Bridge Superstructure 3

Bridge Substructure 4

Special Provisions 5

Bridge Base Sheets 6

Revisions 7

Original Date Published: January 20, 2000

Current Publication: February 2014

Section 1

Preliminary Design

SECTION 1.1: Data Sheets
1.1.1 - Data Sheet Preparation 1.02
1.1.2 - Data Sheet Example # 1 ..... 1.03
1.1.3 - Data Sheet Example # 2 ..... 1.07

SECTION 1.2: Railroad Grade Separation
1.2.1 - Railroad Policy 1.11
1.2.2 - Railroad Track Protection Shoring 1.15

SECTION 1.3: Historic Bridges
1.3.1 - Historic Bridge Management 1.16

SECTION 1.1 – DATA SHEETS

1.1.1 - Data Sheet Preparation

Definitions

Critical Berm	The soil line in front of the abutment, after considering the Q100 scour and channel behavior. The elevation is used to determine the minimum design depth of the abutment sheet piles.
Berm Elevation	The level ground elevation at the abutment for the top of the concrete slope protection; or the bottom of riprap. This elevation must be shown on the General Plan and Elevation Sheet.
Design Standard	A number that indicates the type of roadway cross-section, (DR1, DR2, and DR7). Normally, this is based on the vehicle traffic, (ADT or DHV). (Board of Classifications)
Freeboard (ft)	The clear distance between low superstructure elevation and high water elevation.
Minimum Grade (ft)	The lowest point of grade line elevation at the CL Roadway between CL abutments used by the Hydraulic Section for the hydraulic study. Actual grade line profiles for the Bridge Design should use the minimum grade or higher in order to avoid decreasing the freeboard.
Sufficiency Rating	A rating factor between 1 and 100 that indicates the overall condition of the bridge structure.
TS&L	The preliminary plan showing Type, Size, and Location of the bridge.
Ordinary High Water	The point at which natural vegetation shifts from predominately water dependent species to terrestrial species.

General Format

All Data Sheets shall be written using the format of this policy in order to maintain uniformity.

The following two Data Sheet examples should be used as the standard format. Data Sheet Example # 1, X-X (XXX), is for a project with an existing structure that will not be removed. Data Sheet Example # 2, Y-Y (YYYY), is for a project with an existing structure that will be removed.

The amount of information on your Data Sheets is not limited to what is shown on the two examples. You may need to add more information to make your intentions clear. The examples show the minimum information, which must be included. As in the examples, if certain information is not applicable, write N/A, do not delete the heading.

The writer of the Data Sheet should review the correspondence file, utility requirements and any other preliminary reports. For existing structures, the Bridge Inventory file should be reviewed.

Painting

If any structural steel will be painted or removed on the existing bridge structure, Jeff Handeland should be consulted about the paint issues when the Data Sheet is being written. The following criteria will be considered:

- Removal of girders, rails, piling, etc.
- Modifying of existing girders by drilling or cutting.
- Over coating and EPA regulations.

1.1.2 - Data Sheet Example # 1

Bridge Design Data Sheet

Project Name

Project No.: X-X (XXX)

Control No.: XXXXXX

County: Fillmore

Structure #: SXXX_XXXXXL

Written by: .....

Hydraulics Review by: .....

Approved by:

Mark Traynowicz, Bridge Engineer ..... Date.....

(*), Assistant Bridge Engineer ..... Date.....

* Insert name of appropriate Section Leader.

May 4, 2010		Project No.:	X-X (XXX)
Sheet: 1 of 3		Control No.:	XXXXXX
By:		Structure No.:	SXXX_XXXXXL
		County:	Fillmore
		Section Location:	10-T13M R13F

General Work Description:

Existing Structure: At Sta. 1030+48.00 (RT)

Plan:	XX-X (131)
Year:	1980
Type:	Concrete Slab Bridge
No. of Spans:	3
Bridge Length:	102’ - 0 1/2”
Span Lengths:	30’ - 0”; 40’ - 0”; 30’ - 0”
Width:	39’ - 0” Clear Roadway
Skew:	15° RHB
Sufficiency Rating:	80.0
HS (Inventory) Rating:	20
HS (Operating) Rating:	33
Low Structure Elev.:	1552.75

Existing structure will remain in place. New structure will be built adjacent to existing.

Proposed New Structure: At Sta. 1030+48.00 (LT)

Clear Roadway:	40 ft.
Type:	Concrete Slab
Live Load:	HL-93
Span Lengths:	30’ - 0”; 40’ - 0”; 30’ - 0”
Bridge Length:	102’ - 0 1/2”
Skew:	15° RHB
Rails:	Open concrete rail
Horizontal Alignment:	Tangent
Design Specifications:	AASHTO LRFD Bridge Design Specifications

Approach Slabs:

50 ft. standard with 1 in. preformed joint.

Abutments:

Combination HP pile and sheet pile wall with U-shaped wings.
Critical Berm Elevation = 1536.00 ft
Bottom of sheet piles to extend to at least Elev. 1526.0

Bents:

Open pile bents.
Batter end piles 1½” to 12”

Piles:

Bents: HP 12x53 steel piling, XX kip/pile.
Abutments: HP 12x53 steel piling, XX kip/pile.

May 4, 2010
Sheet: 2 of 3
By:

Project No.: X-X (XXX)
Structure No.: SXXX_XXXXXL

Traffic Data:

Year:	2010	2030
ADT:	2565	4490
DHV:	280	490
% Heavy Trucks:	25	25
Design Standard:	DR-2	

Traffic:

Traffic will be maintained on existing bridge during construction of new bridge.

Utilities:

There are no utilities.

Lighting & Sign Structures:

N/A

Bridge Constructability Notes:

Existing structure to be used as work platform for Phase I.

Other Notes:

New bridge will be twin to existing structure.

Bridge Hydraulic Information:

Stream:	Dry Creek
DA:	21.3 sq. mi.
Q100:	4000 CFS (Base Flood)
Q100 HW Elev.:	1550.5 ft. (DS)
Overtopping Frequency:	45 yrs.
Q(Overtopping Flood):	2000 cfs
Low Road Elev.:	1555.0 ft.
WWA below Q100 HW Elev.:	720 sq. ft.
Q100 General Scour:	0.0 ft.
Q100 Local Scour:	3.0 ft.
Q500 Scour Elev.:	1500.8 ft.
FL Elev.:	1531.8 ft.
Q(Ordinary High Water):	3000 cfs
Ordinary High Water Elev.:	1540.5 ft.

Grade:

Minimum Bridge Grade:	1555.043 ft.
Crown (+) Superstructure:	1.70 ft.
Low Structure Elev.:	1553.00 ft.
Freeboard Available:	4.70 ft.
Freeboard Required:	1.0 ft.
Grade Raise:	N/A

Channel:

Shape channel and place broken concrete riprap 27 ft. upstream and downstream. See attached Preliminary Layout Sheet.

May 4, 2010
Sheet: 3 of 3

Project No. X-X(XXX)
Structure No. SXXX_XXXXXL

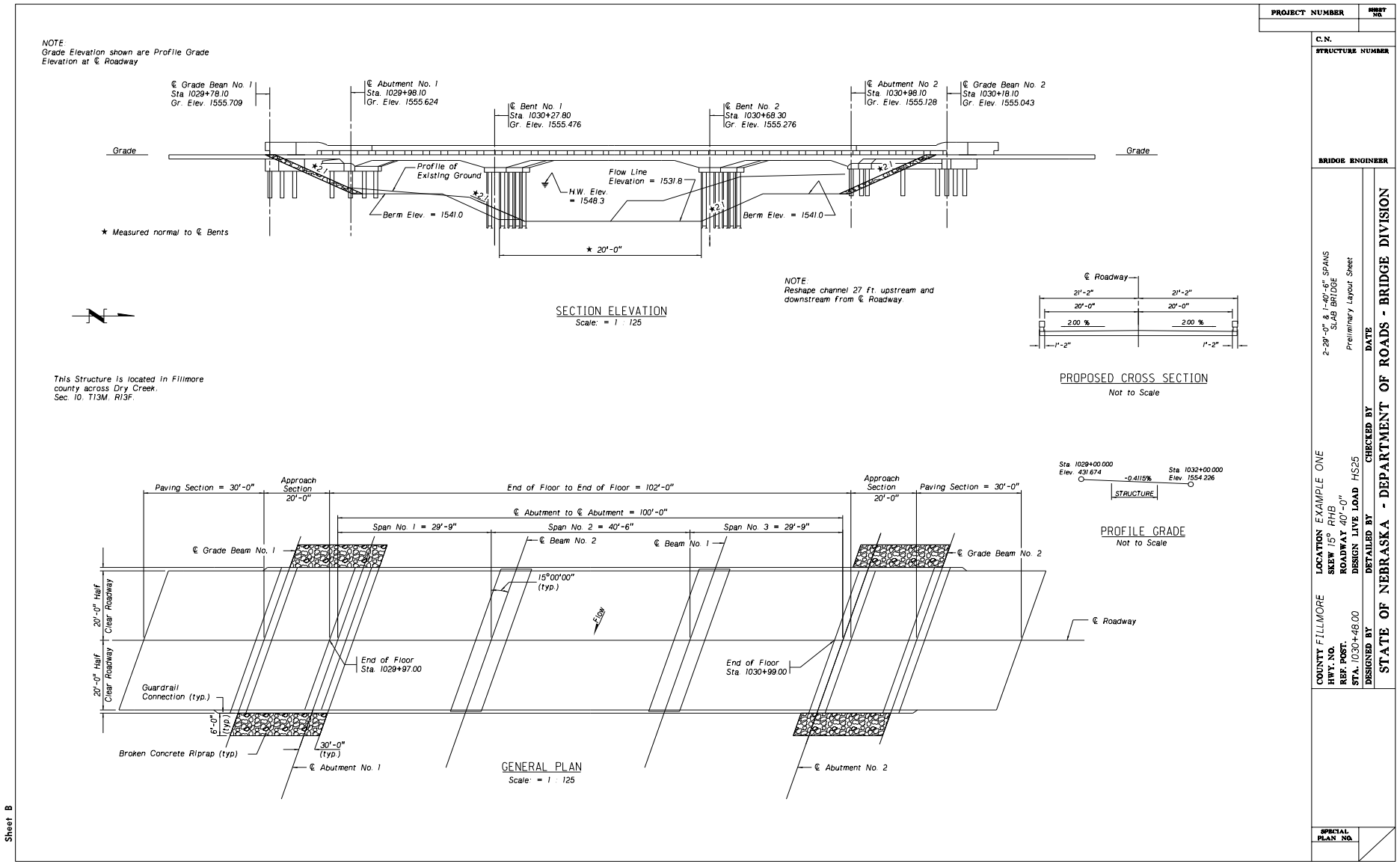

1.1.3 - Data Sheet Example # 2

Bridge Design Data Sheet

Project Name

Project No.: Y-Y (YYYY)

Control No.: YYYYYY

County: Fillmore

Structure #: SYYY_YYYYYR

Written by: .....

Hydraulics Review by: .....

Approved by:

Mark Traynowicz, Bridge Engineer ..... Date.....

(*), Assistant Bridge Engineer ..... Date.....

* Insert name of appropriate Section Leader.

May 20, 2010		Project No.:	Y-Y (YYYY)
Sheet: 1 of 3		Structure No.:	SYYY_YYYYYR
By:		County:	Fillmore
		Section Location:	10-T13M R13F

General Work Description:

Existing Structure:

Plan:	77-2 (131)
Year:	1933
Type:	Concrete Slab Bridge
No. of Spans:	3
Length:	82’ - 1 3/4”
Span Lengths:	25’ - 0”; 34’ - 0”; 25’ - 0”
Width:	26’ - 0” Clear Roadway
Skew:	20° LHB
Sufficiency Rating:	70.1
HS (Inventory) Rating:	18.1
HS (Operating) Rating:	30.2
Low Structure Elev.:	1571.6

Reason for Removal:

Roadway Grade Raise.

Proposed New Structure: At Sta. 438+13

Clear Roadway:	44’ - 0”
Type:	
Original Design:	Prestressed Concrete Girder NU1600
Alternate Design:	Weathering Steel Welded Plate Girder (60” web depth)
Live Load:	HL-93
Span Lengths:	115’ - 0”
Bridge Length:	117’ - 1 3/4”
Skew:	20° LHB
Rails:	Open Concrete Rail
Horizontal Alignment:	Tangent
Bridge Slab:	Empirical Design
Design Specifications:	AASHTO LRFD Bridge Design Specifications

Approach Slabs:

50 ft. standard with 1 in. preformed joint.

Abutments:

Concrete cap on sheet pile wall with U-shaped wings. Use slab turndown.
Critical Berm Elevation = 1561.0 ft.
Bottom of sheet piles to extend to at least Elev. 1547.0.

Bents:

N/A

Piles:

Use HP 12x53 steel piling, XX kip/pile.

May 20, 2010
Sheet: 2 of 3

Project No.: Y-Y (YYYY)
Structure No.: SYYY_YYYYYR

Traffic Data:

Year:	2010	2030
ADT:	4430	7025
DHV:	490	775
% Heavy Trucks:	10%	10%
Design Standard:	DR-3	

Traffic:

Traffic will be detoured.

Utilities:

There are no utilities.

Lighting & Sign Structures:

N/A

Bridge Hydraulic Information:

Stream:	Dry Creek
DA:	21.3 sq. mi.
Q100:	4000 CFS (Base Flood)
Q100 HW Elev.:	1550.5 ft.
Overtopping Frequency:	45 yrs.
Overtopping Q:	2000 CFS
Low Road Elev.:	1555.0 ft.
WWA below Q100 HW Elev.:	720 sq. ft.
Q100 General Scour:	0.0 ft.
Q100 Local Scour:	3.0 ft.
Q500 Scour Elev.:	1500.8 ft.
FL Elev.:	1531.8 ft.
Q(OHW):	3000 CFS
Ordinary High Water Elev.:	1540.5 ft.

Grade:

Minimum Grade:	1578.1 ft.
Crown (+) Superstructure:	6.44 ft.
Low Structure Elev.:	1571.86 ft.
Freeboard Available:	7.2 ft.
Freeboard Required:	2.0 ft.
Grade Raise:	5.2 ft.

Channel:

Shape channel and place broken concrete riprap from existing bridge removal 26 ft. upstream and downstream. Transition from graded section to match natural channel inside the Right of Way. Place filter fabric under riprap. See attached Preliminary Layout Sheet.

Bridge Constructability Notes:

Other Notes

May 20, 2010
Sheet: 3 of 3

Project No. Y-Y(YYYY)
Structure No. SYYY_YYYYYR

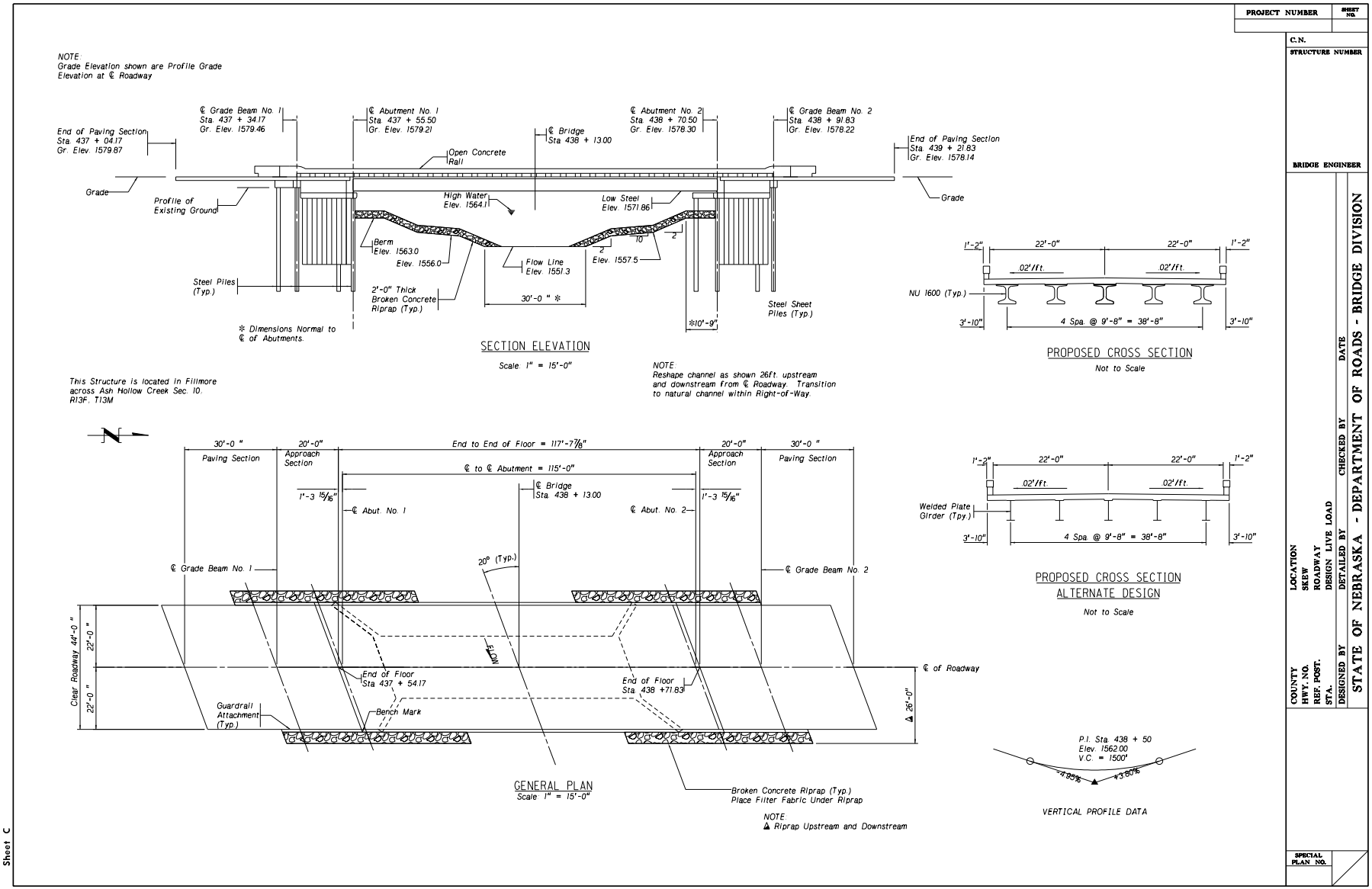

SECTION 1.2 – RAILROAD GRADE SEPARATION

1.2.1 – Railroad Policy

The information in this policy is based on the BNSF Railway – Union Pacific Railroad, Guidelines for Railroad Grade Separation Projects and written correspondence with both companies.

Plan Submittals to Railroad (RR)

Preliminary Design

When the preliminary layout (TS&L -Type, Size & Location) has been determined, the TS&L will be submitted to the Railroad Liaison for approval. The submittal should include a Plan View (including the Railroad's Right-of-Way), an Elevation View showing the layout criteria, and the Bridge Cross-Section.

Final Design

Final Plans (4 copies) shall be submitted to the Railroad Liaison for approval.

Layout Criteria

The following sketch illustrates the general layout criteria for UPRR & BNSF.

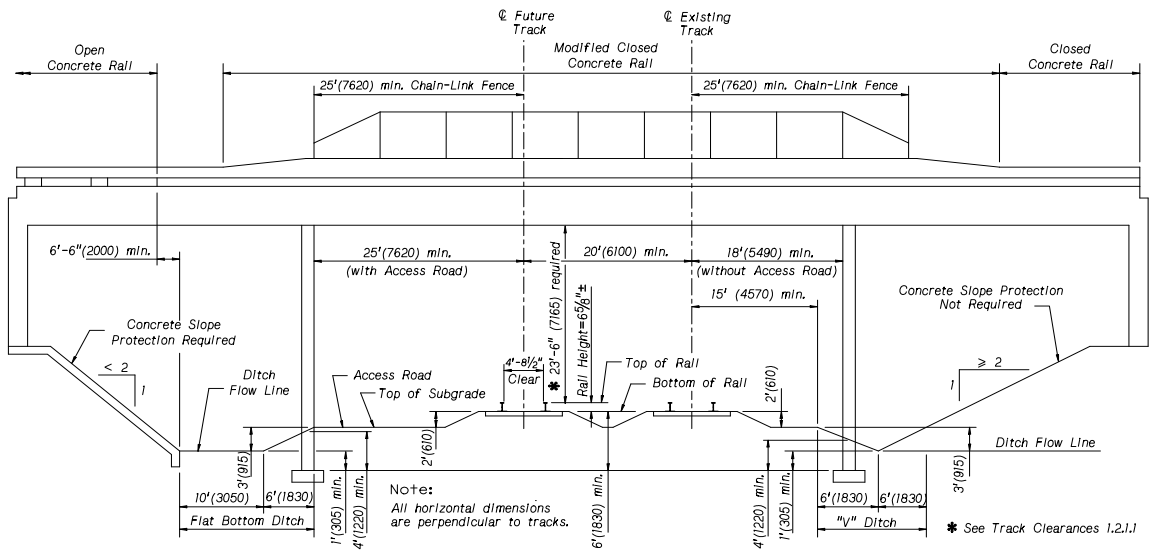

Concrete Slope Protection

Concrete slope protection shall be provided for all slopes.

Future Tracks

UPRR or BNSF may require space be provided for additional future tracks or access roads. Additional clearance may be required for future adjustments in track sag or vertical curve or if future track may be changed for flood considerations. This information should be obtained by the Bridge Division through the Railroad Liaison from UPRR or BNSF before the TS&L stage of planning.

Note: For future tracks, the horizontal spacing between two tracks shall be measured at a right angle from the centerline of the tracks. The spacing shall be 20 ft. for freight tracks and 25 ft for commuter tracks.

Track Profiles

- Surveys for the profile of the existing top of rail 1000 ft. each side of the proposed structure need to be performed only on one rail for each mainline track and shall be shown with the TS&L and on both the preliminary and final submittals to the Railroad. The profile is to be done by Roadway Design.
- A profile is not needed for industrial tracks unless it is a more restrictive condition.
- The high rail (in a curve) shall be used for the profile. In straight-through tracks, the right rail shall be used. The right rail is defined as the rail on the right side of the track when looking towards increasing railroad milepost number. Railroad milepost numbers usually increase from South to North and East to West, Designers need to verify the direction of milepost numbers increase with the Railroad Liaison.
- Profiles are to be superimposed together onto one sheet.

  The following Note (# 660) shall be placed on the Final Bridge Design Plans:

  The top of rail elevations shall be verified in the field before beginning construction of the bridge. If the rail elevations are not as shown on the plans, the Project Manager shall contact the Bridge Division.

Track Clearances

- The required vertical clearances shall be 23 ft. - 6 in. above the plane of the top-of-rails. If the required vertical clearances cannot be met, Designers can use a minimum of 23 ft. - 4 in. with the Assistant Bridge Engineer's approval. The required vertical clearances must not be violated due to deflection of the superstructure from live loads. Separate shots shall be taken from the high rail(s) to measure vertical clearance and shall be shown on the TS&Ls.
- Horizontal clearances are measured perpendicular to the CL of tracks from CL of track to the face of column or wall.
- Where provision is made for more than 2 tracks, space is to be provided for access roads on both sides of the track.
- Required horizontal clearances are to be increased 1½ in. per degree of curve where the structure is located adjacent to or within 80 ft. of the curve limits.

Construction Clearances

Minimum construction clearances shall be as follows:

- 21 ft. 6 in. vertical above the plane of top-of-rails.
- 12 ft. for UPRR & 15 ft. for BNSF, horizontal at right angle from centerline of track.

Drainage

Drainage from the overpass must be diverted away from the railroad tracks and not discharged onto the tracks or roadbed. The direction of drainage flow will be shown on the Plans (consult with the Assistant Bridge Engineer and Roadway Designer). Drainage at the abutments or approach slabs will be diverted perpendicular to the roadway and flow to the roadway ditch, in coordination with the Roadway Designer.

A "V"-shape or flat-bottom ditch will be provided on each side of the tracks to match the existing ground or as required by the RR company. Culverts may be installed on the opposite side of the pier from the track in lieu of ditches when approved by the Railroad's Chief Engineer Design.

The plans should include a general note if the proposed bridge structure will not change the quantity and characteristics of the flow in the railroad ditches.

- Bridge Deck Drainage

  When floor drains are required, a flat bottom ditch will be required by the Railroad to carry any increased drainage from the embankment slope. The Bridge Designer shall take the necessary precaution to minimize erosion and prevent erosion deposits from building up in the ditch. This will interfere with the proper track ballast drainage and lead to settlement of the tracks.

Railroad Barriers

Bridges without sidewalks

BNSF & UPRR: As a minimum, a 3 ft. - 6 in. high closed modified concrete rail with a chain link fence extending 9 ft. - 6 in. above the bridge deck shall extend to the limits of the Railroad Right-of-Way or a minimum of 25 feet beyond the centerline of the outermost existing track, future track, or access road, whichever is greater. Fence is not required past the end of floor. See Railroad Base Sheets in Section 6 (6.71 – 6.75).

In locations where switching or other frequent railroad activities are performed, Union Pacific and Burlington Northern Santa Fe may have additional special requirements.

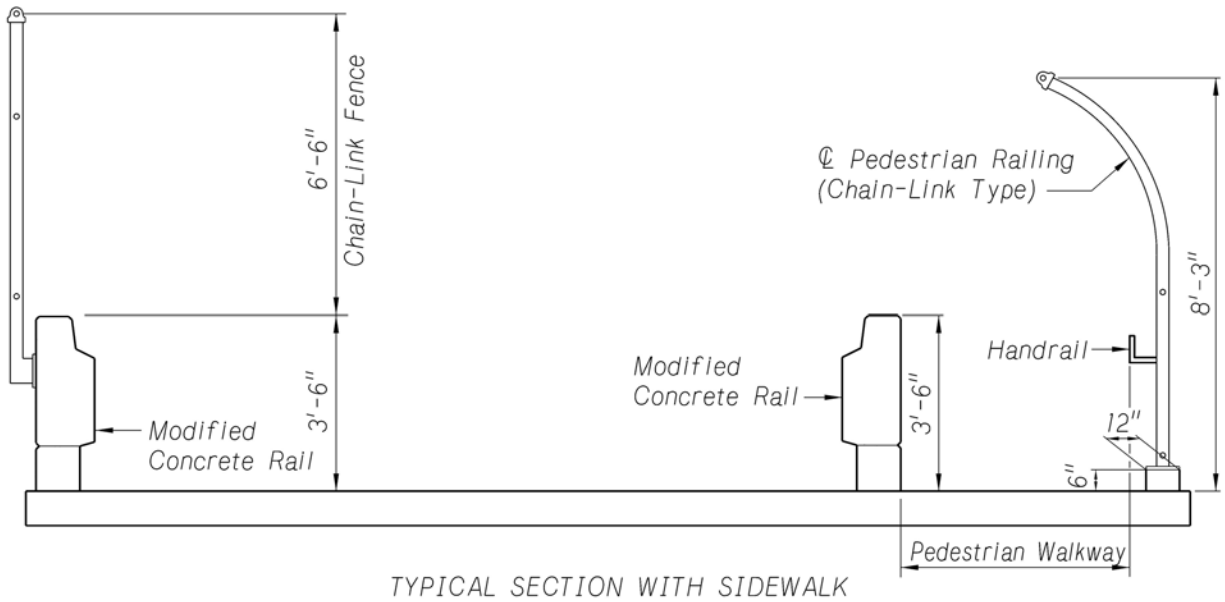

Footings

The top of the footings will be a minimum of 6 feet below the base of the track rail, 4 feet below the natural ground, and a minimum of 1 foot below flow line of ditches for footings located within 25 feet of the centerline of track.

Lighting

Lights are to be installed on the underside of the viaduct for bridges over 80 ft. in width.

Pier Protection

Adjacent to Railroad Tracks

All structures shall comply with the current edition of the American Railway Engineering and Maintenance-of-Way Association Manual for Railroad Engineering (AREMA) requirements for pier protection walls.

To limit damage by the redirection and deflection of railroad equipment, piers supporting bridges over railways and with a clear distance of less than 25 feet from the centerline of a railroad track shall be of heavy construction (defined below) or shall be protected by a reinforced concrete crash wall. Crash walls for piers from 12 to 25 feet clear from the centerline of track shall have a minimum height of 6 feet above the top of rail. Piers less than 12 feet clear from the centerline of track shall have a minimum crash wall height of 12 feet above the top of rail.

The crash wall shall be at least 2 feet 6 inches thick and at least 12 feet long. When two or more columns compose a pier, the crash wall shall connect the columns and extend at least 1 foot beyond the outermost columns parallel to the track. The crash wall shall be anchored to the footings and columns, if applicable, with adequate reinforcing steel and shall extend to at least 4 feet below the lowest surrounding grade.

Piers shall be considered of heavy construction if they have a cross-sectional area equal to or greater than that required for the crash wall and the larger of its dimensions is parallel to the track. For a single column the minimum cross-sectional area is 30 square feet. Columns with 30 square feet of cross-sectional area must have the larger dimension parallel to the track.

Consideration may be given to providing protection for bridge piers over 25 feet from the centerline of track as conditions warrant. In making this determination, account shall be taken of such factors as horizontal and vertical alignment of the track, embankment height, and an assessment of the consequences of serious damage in the case of a collision.

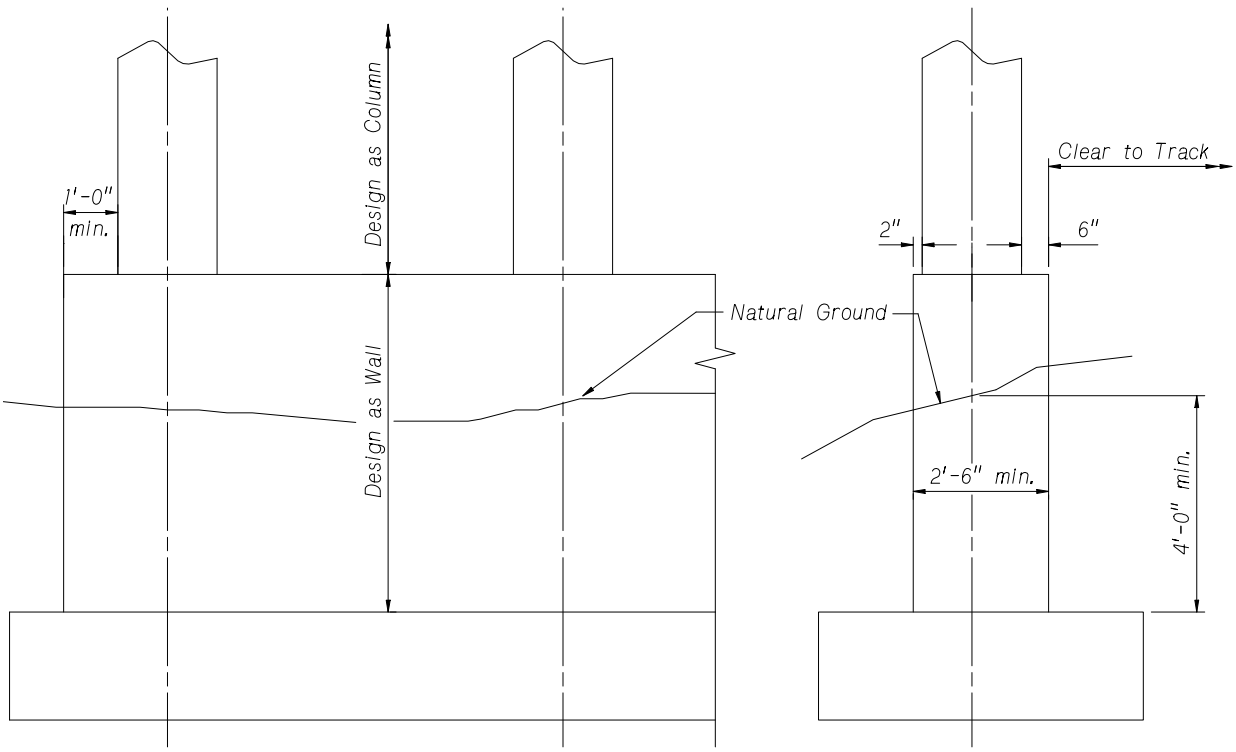

Note: When drilled shafts are used in lieu of footings, the crash wall shall be anchored to the columns with adequate reinforcing steel and shall extend to at least 1 foot below the lowest surrounding grade.

1.2.2 - Railroad Track Protection Shoring

Excavations more than 12 feet from CL Track

In most railroad viaducts, shoring shall not be allowed within 12 feet of CL track. The following cell shows RR shoring requirements. Designers should show railroad shoring requirements. Therefore, Base Sheet 6.74 should be included in the bridge plans.

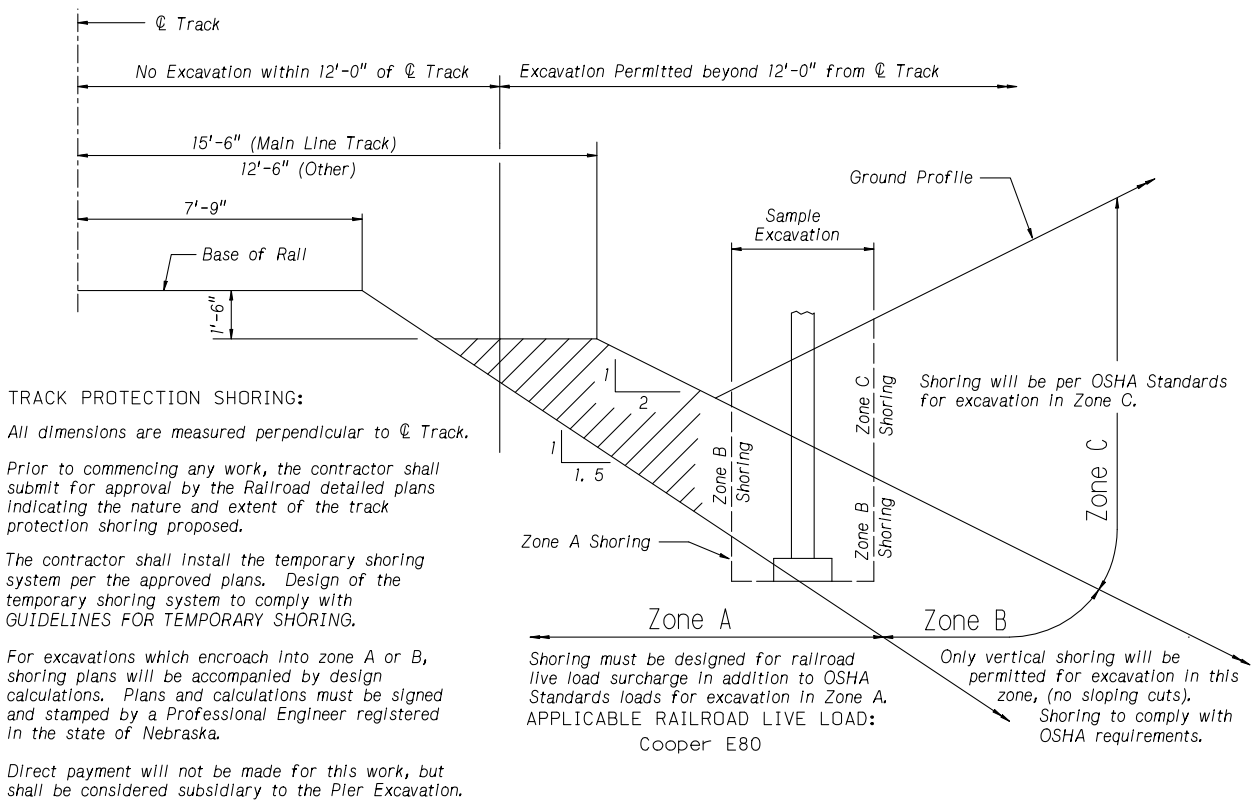

TRACK PROTECTION SHORING REQUIREMENTS

SECTION 1.3 – HISTORIC BRIDGES

1.3.1 - Historic Bridge Management

Background

In compliance with the Section 106 of the National Historic Preservation Act which declares that any project involving Federal funds must take into consideration the impact that the project might have on properties eligible for, or listed on the National Register of Historic Places. Since Federal funds are often involved in aid to highway and road improvements in Nebraska, the provisions of Section 106 apply to most highways and many county bridges in the state.

Responsibility for administering Section 106 rests with Nebraska State Historical Preservation Office (SHPO), and when Federal funds are involved, negotiation is conducted between the FHWA and the SHPO to verify resource consideration and protection. Even if Federal funds are not involved in a project, it is good stewardship of these important historic resources to preserve them for future generations.

In addition, Section 4(f) of the U.S. Department of Transportation Act protects historic sites from highway project effects unless there is “no feasible and prudent alternative”. If the project cannot avoid affecting a historic property, the project must be planned to minimize the damage. The Surface Transportation and Uniform Relocation Assistance Act of 1987 goes further. Asserting that it is “in the national interest to encourage the rehabilitation, reuse, and preservation of bridges significant in American history, architecture, engineering, and culture”. The Act permits the Federal Government to reimburse costs associated with preserving historic bridges or mitigating unavoidable damage.

Priorities for Treatment of Historic Bridges

1. The preferred treatment for a historic bridge is to have it continue to carry vehicular traffic at its original site with minimal modification.
2. If it is not feasible to keep the bridge at its original site, every effort should be made to find an appropriate site to which it could be relocated for vehicle use. There is a marketing and advertising requirement in the agreement between the FHWA, NDOR, and the SHPO to notify the public and other government entities of the availability of the bridge for reuse.
3. If the bridge can no longer carry vehicular traffic, or could do so only at the expense of its historic integrity, the next best solution to evaluate is nonvehicular use at its original site with minimal modification (e.g.; pedestrian or bike bridge).
4. If the bridge can no longer carry vehicular traffic, no “as is” use is feasible, or it cannot be left in place, adaptive uses should be evaluated, with preference given to reuse that retains the bridge at its original location. If no suitable in-situ adaptive use can be found, the bridge can be relocated to a less demanding vehicular crossing or adapted for nonvehicular use at the new location (preferably in the public domain).
5. If the bridge cannot remain at its original site and cannot be moved, it shall be documented to the standards of the Historic American Engineering Record before demolition, disassembly, or modifications that will destroy its historic integrity. If possible, the structure should be disassembled carefully and stored until a new location for it can be found or significant components should be incorporated into any new bridge at the site or salvaged for educational purposes.

Alternative Evaluation and Documentation – A Requirement

When a project will affect a historic bridge, the FHWA and the State Historic Preservation Officer will judge whether the project will adversely affect the structure, and whether adequate alternative evaluations have been conducted to avoid or minimize the effect. It is the responsibility of the NDOR and/or the county to provide a report containing a full description of all alternatives considered, to avoid, minimize or mitigate affects to the structure. (Example of such analysis is available upon request from NDOR). When documenting the need for replacing or preserving a bridge, technical, legal, financial, and safety considerations must be weighed in reaching the final decision. The problem with the structure must be clearly stated, be it structural or functional.

The following range of alternatives (listed by priority) must be considered carefully before plans to alter or remove a historic bridge are finalized.

1. **Continued use of the bridge for vehicle traffic at its original location, with restoration and rehabilitation.**
   - Passive, non-structural actions to lower the live load on a bridge should be considered as a first alternative when load is of concern. Lowering the posted load limit and restricting traffic to one direction are examples of ways to retain a bridge in service without structural modification.

2. **Use of the bridge for non-vehicular traffic at the site.**
   - Issues involved with this option include what to do with vehicular traffic. This may be a considerable problem at an important crossing when there are no alternate bridges convenient or capable of handling greater traffic loads.
   - It may also be problematic if physical or economic considerations require use of the existing bridge site for a new bridge.
   - One alternative that has been used is to build a new bridge alongside the old one, altering alignment to properly accommodate the new location.
   - The existing bridge may be closed to vehicular traffic, but is reserved in place for public viewing.
   - Some counties have been provided historical markers and hiker/biker pathways to display the bridge.
   - One suggestion has been made that the bridge can be retained for vehicle crossing if it meets structural sufficiency, so that the traveling public can experience driving over the old bridge if they so choose.
   - Every effort should be made to keep the bridge in public ownership, either through continued use by the current owner or another government agency.
   - If marketing of the bridge to private ownership is necessary, protective covenants must be put in place for the bridge's preservation.

3. **Relocation of the bridge.**
   - When a bridge must be moved to a new site, provisions must be made for maintenance, damage protection (natural and manmade), and public accessibility.
   - The abutments or piers at the new site should match the original configuration, if possible.
   - Issues of ownership and marketing, as described above, must be considered.

4. **Destruction of historic character, demolition.**
   - This option includes rehabilitation without consideration of historic integrity. Work that harms the historic integrity of the bridge should be undertaken only if it is not possible to make the bridge safe and efficient and it cannot be moved.
   - In this event, the bridge shall be documented for the Historic American Engineering Record prior to the onset of work, unless an emergency situation exists.
   - If demolition is to occur, significant and ornamental features should be salvaged and reused to assist the preservation of a similar structure or for educational purposes, or should be mothballed for reuse in the future.

The information presented herein is offered to assist early evaluation of alternatives for historic bridge preservation. The Nebraska Department of Roads offers assistance in this process through our Historic Bridge Program Office. If Federal funding is to be used in the proposed project, its availability will be dependent upon proper completion of the paperwork and processes described in this document. For additional information or assistance, please contact Environmental Section Manager (currently Jason Jurgens, phone (402) 479-4418).

Maintenance Activities on Historical Bridges

The following repairs and bridge maintenance, necessary to keep the bridge functioning, will not change the appearance or character of a bridge.

1. Bridge deck patching or placing of concrete overlay.
2. Replacing of truss or other structural members in kind.
3. Replacing bridge rail.
4. Painting of structural steel or railing.
5. Redecking or replacing rails.
6. Rebuilding of abutment or pier caps.
7. Replacing of bearing devices in kind.
8. Replacing of bridge expansion or fixed devices.
9. Backfilling erosion around abutments.
10. Providing scour protection at piers or abutments.
11. Providing additional bracing to bents.
12. Reestablishing berm, as needed.
13. Repairing collision damage, as needed.

Section 2
General Bridge Design

SECTION 2.1: General Plan Items

2.1.1 - Bridge Plan Procedures Policy 2.02
2.1.2 - Design Documentation..... 2.04
2.1.3 - Plan Title Block Policy..... 2.05
2.1.4 - Front and General Plan and Elevation Sheet Policy..... 2.08
2.1.5 - Plan Revision Procedures..... 2.10
2.1.6 - Bridge Quantity Tolerance Policy..... 2.12
2.1.7 - Channel Work 2.13
2.1.8 - Shop Plans Review Policy 2.15
2.1.9 - Quality Control and Quantity Assurance (QC/QA) Practices….. ..... 2.20
2.1.10 - Bridge Division CAD File Naming Convention 2.22

SECTION 2.2: General Design Items

2.2.1 - Definition of Bridge Terms 2.23
2.2.2 - Bridge Loading Policy 2.24
2.2.3 - Structural Steel Connections Policy..... 2.26
2.2.4 - Approach Slab Policy..... 2.27
2.2.5 - Construction Joint Policy..... 2.29
2.2.6 - Temperature Movement Policy 2.30
2.2.7 - Utility Policy..... 2.31
2.2.8 - Lighting Policy..... 2.33
2.2.9 - Phased Construction Policy 2.35
2.2.10 - Mechanically Stabilized Earth *(MSE)* Wall Policy 2.41
2.2.11 - NDOR Retaining Wall Design Guidelines 2.43
2.2.12 - Coordinate Guidelines 2.45
2.2.13 - Concrete Coating…….... 2.46

SECTION 2.3: Standard Notes

2.3.1 - General Notes..... 2.47
2.3.2 - Rolled Beam Girder Bridge Notes..... 2.49
2.3.3 - Welded Plate Girder Notes 2.50
2.3.4 - Concrete Notes 2.52
2.3.5 - Structural Steel Notes 2.54
2.3.6 - Geology Sheet Notes..... 2.55
2.3.7 - Miscellaneous Notes..... 2.58
2.3.8 - Pay Item Policy 2.61

SECTION 2.4: Concrete Reinforcement

2.4.1 - Concrete Reinforcement Policy 2.69
2.4.2 - Rebar Data Table..... 2.71
2.4.3 - Bars Development/Splices Tables 2.73

SECTION 2.5: Slope Protection Details

2.5.1 - Concrete Slope Protection Policy 2.75
2.5.2 - Riprap Policy..... 2.78

SECTION 2.1: GENERAL PLAN ITEMS

2.1.1 - Bridge Plan Procedures Policy

Data Sheet

A Data Sheet will be prepared as prescribed in the *Data Sheet Preparation* policy.

Design

All Bridge Plans shall be designed or checked for structural integrity by an experienced Engineer, registered by the State of Nebraska.

Ductility factor (n_D), Redundancy factor (n_R) and Operational Importance factor (n_I) shall be taken as 1.0. Any deviation from this policy should be shown on the Data Sheet or approved by the Assistant Bridge Engineer.

Plan Sheets

Plan Sheets should be assembled in the order of construction and include the plan items listed below. Phasing or large scale projects may require more than one sheet to properly detail plan items.

- Front Sheet
- General Plan & Elevation Sheet
- Bridge Coordinate Sheet
- Geology Sheet
- Abutment Sheet
- Pier/Bent Sheet
- Girder Sheet
- Roadway Cross-Section Sheet
- Slab Reinforcement Sheet
- Approach Slab Sheet
- Concrete Rail/Barrier Sheet
- Bill of Bar Sheet with Bending Diagrams (Other Bill of Bars shall be included with Abutment, Pier/Bent, and Slab Sheets)

Rating

All superstructures (State and County projects) shall be rated well ahead of the turn-in-date. Superstructure Sheets should be submitted for rating as soon as the design is completed. Consultants shall supply the required information to the Rating Section at first review. The intent is for the superstructure to be evaluated by the Rating Section while the Designer continues with the substructure design.

Assistant Bridge Engineer Review

After a design check is completed and the Bridge Plans are detailed, the Assistant Bridge Engineer shall review the plans. When applicable, a set of prints shall be transmitted to the Railroad office.

Two *(2)* sets of quantity calculations shall be prepared after all review comments have been resolved and/or incorporated into the plan.

Turn-in

Structure Numbers can change from the time the preliminary Data Sheet is written to the time the project is turned in. Structure Numbers need to be verified before the project is turned in; especially on new alignments.

The Assistant Bridge Engineer shall prepare special provisions for work and / or Pay Items not covered by the Standard Specifications. Items such as “Preparation” or “Removal” will need to

be written to meet the individual structure requirements. Other standardized “special provisions” are available on tape from the Information Processing Center, and published in Section 5 of the BOPP manual.

The Assistant Bridge Engineer shall prepare a Bridge Quantity Summary using the Trans.Port Letting and Award System (LAS) computer program.

The Assistant Bridge Engineer shall transmit the Bridge Plan originals, special provisions, and a copy of the quantity summary to the appropriate Roadway Design Section Leader or the Secondary Roads Engineer.

The Assistant Bridge Engineer, Bridge Designer, or Consultant shall sign and date their stamp on each sheet of the Bridge Plans. The Geology Sheets and the Pile Layout Sheets shall also be stamped, signed, and dated by the Geotechnical Engineer. The stamp of the Assistant Bridge Engineer, Bridge Designer, or Consultant shall be placed in the title block. The Geotechnical Engineer’s stamp shall be placed outside the title block adjacent to the P.E. stamp in the title block.

Before the originals leave the Bridge Office, one set of prints shall be produced, marked, and dated as “Letting Prints” and filed by project number.

Project Letting

After the project has been let, a 1/2 size of paper print will be filed by project number. *(*All alternate designs may be discarded at this time.) Full-size originals and shop plans are filed by project number in the vault.

Completed Project

‘As-built’ plans are provided by the Construction Office after the construction is complete. All ‘as-built’ modifications are transferred to the full-size original plans and then sent to Archives, with the shop plans, to be microfilmed by Structure Number. Shop plans and the full-size originals are then destroyed, unless they are a special structure (*). As-built plans are then sent to the Planning Division, which in turn sends them to the District in charge of the project for storage.

(*) Special structures include:

(1) Missouri River Bridges

(2) Detour or temporary Bridges

(3) All Bridges on Interstate 80, 129, 180, 480 & 680

(4) All Bridges 500 ft. long or longer

2.1.2 - Design Documentation

General

The intent of this policy is to establish uniformity in compiling design calculations.

In order to maintain effective Bridge Division archives for future use, design calculations should be properly identified and assembled so that important information can be retrieved with relative ease.

In the event a single page becomes separated from the package, every page of your design, including calculations, sketches or notes, shall be identified using the basic information shown below.

Sample Page

	PROJ. LOC. *Doors Creek*	PROJ. NO.	*F-7-4(1002)*
		STATION	*629+52*
STATE OF NEBRASKA	COUNTY *Small*	DATE	*5-4-93*
DEPARTMENT OF ROADS		BY	*U.R.*
Trustworthy BRIDGE DIVISION		STRUCTURE	*S007*
02395 SHEET *31* OF *54*			

Design Calculation Outline

Preliminary Data

1. Preliminary Data Sheet
2. Data Sheet
3. Notes from Correspondence & Hydraulics Files
4. Notes from Roadway Design Discussions
5. Notes from Geology
6. Typical Cross-Section
7. Plan and Profile Grade
8. Horizontal and Vertical Alignment

Superstructure

1. Loads
2. Concrete Slab Design
   Reinforcing Steel Typical Section
3. Girder Design
4. Expansion Joint Calculations
5. Bearing Devices
6. Girder Seat Elevations
   Piers/Bents
   Abutments

Substructure

1. Loads on Substructure
   Piers/Bents
   Abutments
2. Pier/Bent Design
   Cap and Pedestal Dimensions
   Flexural Reinforcing Steel
   Shear Reinforcing Steel
   Wall or Column Design
   Footing Design
   Pile Design
3. Abutment Design
   Cap and Bearing Dimensions
   Abutment Beam Design
   Wing Design
   Abutment and Wing Pile Design
   Sheet Pile Design

Rail Dimensions
Approach Slab Design
Shim Information

2.1.3 - Plan Title Block Policy

General

Bridge Division Plans must have the following items contained in the title block on each sheet.

Project Number	CL Bridge Station	Detailer
Control Number	Location	Checker
Structure Number	Skew	Date
Bridge Engineer's Seal	Roadway Width	Nebraska Logo
County Name	Design Live Load	Engineer's Seal/Date
Highway Number	Bridge Description	Special Plan Number
Reference Post	Designer	

Consultant Plans

Consultants will place their logo in the lower right-hand corner of the plans outside the title block provided by the Bridge Division on State and County Bridge Plans they design.

Project Number

The purpose of project numbering is to provide a numbering system for highway construction projects. For example, projects on the State highway system are numbered using a prefix (one to ten letters) indicates the highway system, the highway number, zone and sequential number (in parenthesis), such as NH-2-3(112).

Project Number may change if there is a highway system change or funding change for the project (Federal to State funds).

The Bridge Division policy is to omit lettering that indicates funding (before the project number) on all Bridge Plan Sheets.

Control Number

Control Number is a 7 position field that uses a 5 position number assigned to a project based upon the District in which the project is located and will not change during the life of the project. The first number of the Control Number stands for the District in which the project is located, the remaining numbers are sequential.

Structure Number

The following format must be used for Structure Numbers:

County Bridges – STRUCTURE NO. XXXXXXXXXX	Example:	C002004305
State System Bridges – STRUCTURE NO. XXXX XXXXX	Example:	S077 12668
Pedestrian Bridges – Structure NO. XXXXXXXXXX	Example:	M032000P01

State system structure numbers consist of the highway number and reference post number. The first one or two characters will be a letter designating the type of road. ("S" = state, "C" = county, "U" = urban, "M" = municipal, "SS" = state spur, "SL" – state link, "SR" = state recreation.) The next three or four characters designate the location by county, city, or highway number. The next five numbers indicate the reference post, which is unique to the bridge, and give its exact location. Except for links and spurs, most reference posts increase from West to East and South to North. The very last character is usually left blank. In the case of twin structures, an "L" or "R" may appear as a letter on the end to designate right or left structure. The letter "P" may also be used as the last character and indicates a County Bridge not on a section line. Other letters may be used to designate ramp structures at interchanges. If a structure number has a reference post with a letter on the end, then the letter must be included with the reference post in the title block. If information on Bridge Plans Sheets applies to both a Left and a Right structure, then add "L & R" to the end of the structure number, (S077 12668L&R). The first letter of the pedestrian structure is "M" or "U". The next four numbers are the Municipality Code. The next

two numbers are the County Number. The County Numbers and Municipal Codes can be found in Appendix F of the NDOR Bridge Inspection Manual & Coding Guide. The letter “P” is used to denote a pedestrian structure and the final two numbers are the number of pedestrian bridges in the municipality.

Twin Structure
Generally, twin structures have concrete barriers that are separated by a large or small distance, regardless of whether or not the abutments or piers are common to both structures.

Single Structure
Generally, single structures have a 6 in. median curb or solid median barrier separating lanes of traffic. In other words, the superstructure is one piece.

CL Bridge Station

The CL bridge station is the station at the midpoint along the CL of the roadway between the two abutments. Twin structures shall use the midpoint station along the CL project.

Location

Location is normally the Project Name.

Skew

In general, if all supports are not parallel, then the skew shown in the title block will indicate “VARIES”.

Straight Alignments: The angle between the CL of supports and a line perpendicular to the CL of roadway.

Curved Alignments: The angle between the CL of supports and a line perpendicular to the chord line, based off the CL of roadway.

Curved Twin Structures: The angle between the CL of supports and a line perpendicular to the chord line, based off the CL of project. The chord line is from CL abutment to CL abutment.

Sheet Description

Sheet description should indicate the type of items shown on the sheet and should match the Plan Sheet Index shown on the Front Sheet.

Special Plan Number

Each bridge design, including alternates, shall have a unique special plan number starting with 1, 2, 3, etc. for bridges with the same project number. Identical twin structures that have one Bridge Plan for two structures would be the only exception.

Bridge Description

The bridge description includes the following three types of information:

1. **Span description**
   Length of bridge from CL abutment to CL abutment and number of spans
   Use the format, XXX-XX” X-Span
   Examples:
   100’ - 0” SIMPLE SPAN
   200’ - 0” 2-SPAN
   300’ - 0” 3-SPAN
2. **Bridge type**
   CONCRETE SLAB BRIDGE
   STEEL ROLLED BEAM GIRDER BRIDGE
   STEEL WELDED PLATE GIRDER BRIDGE
   PRESTRESSED CONCRETE GIRDER BRIDGE (NU XXXX)

3. **Description of work**

NEW	A new bridge on a new alignment. This description shall not be indicated in the title block.
RECONSTRUCTED	A new bridge on an existing alignment. This description shall not be indicated in the title block.
REHAB	Replacement of the existing deck and all of the superstructure. This can include repairs to the existing substructure. .
REDECK	Replacement of the existing deck to the same clear roadway width. Girders can be made composite, continuous or converted from pin and hanger. May also include partial superstructure replacement.
WIDEN	Addition of a section of bridge that increases the bridge clear roadway width. This may include widening the existing substructure and / or adding a line of girders.

Descriptions of work may be combined.

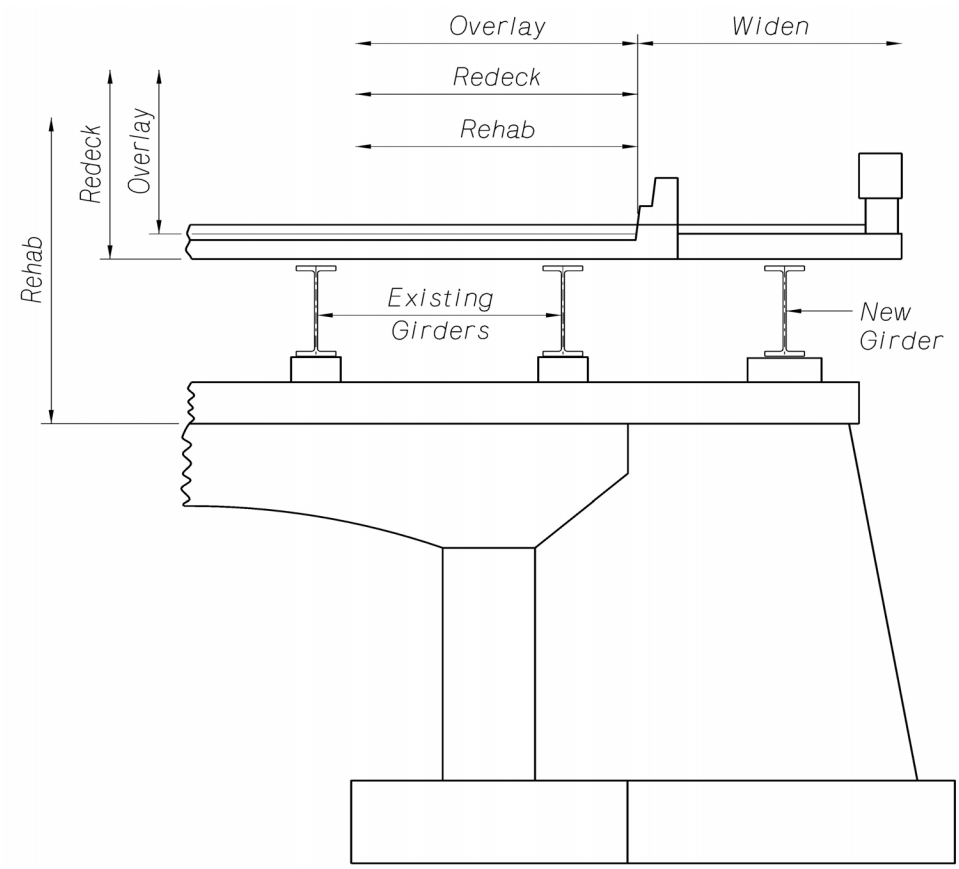

DESCRIPTION OF BRIDGE WORK
SKETCH

REMAIN IN PLACE	All other work less than rehab. Some examples for the Title Block may include REDECK, REPAIR, OVERLAY, and BRIDGE RAIL REMODEL

2.1.4 - Front and General Plan and Elevation Sheet Policy

The first sheet in the Bridge Plans must be a Front Sheet that shows: General Notes, Quantities, and a Plan Sheet Index. When Standard Plans are used in the Bridge Plans, a reference to the Standard must be shown in the lower right corner of the Front Sheet.

The following items listed in this policy must be included on the General Plan and Elevation Sheet of Bridge Division plans, when applicable.

Plan View

- End of floor to end of floor dimension and stations.
- CL to CL of abutment length.
- Span numbers and lengths.
- Deck joint location.
- Concrete Rail/Barrier.
- Floor drains and station.
- Light base and station.
- CL of Utilities.
- Slope protection (may be shown elsewhere).
- Clear roadway.
- Phasing.
- Skew.
- Reference Roadway Plans for inlets.
- Benchmark location.

NDOR Standard Specifications call for placing a benchmark (brass marker), near the end of the structure. For uniformity's sake, the plan General Plan and Elevation Sheet will indicate the location of the benchmark on the right-hand side, center of rail at centerline of Abutment # 1.

Elevation View

- Station and profile grade elevation at supports.
- CL of Bridge Station.
- Bearing connection designations of expansion (E) or fixed (F) at supports. The E and F labels will be omitted at integral abutments and for slab bridges. The E and F do not refer to the stiffness of the substructure.
- Concrete rail/barrier.
- Footing elevations (at bottom of footing).
- Berm elevation.
- Natural Ground Profile.
- New Grading Profile and limits left and right of CL of roadway.

Note

- Profile grade line (PGL) location (upper left corner of page).
- Structure location note (lower left corner of elevation view).
- Utility notes.
- Deck pouring sequence note and diagram.
- Reference to Standard Plans in the lower right corner.
- Upstream and downstream limits of channel excavation.
- North Arrow.

Crossing Data

Streams

- Low steel/concrete elevation
- Flow line elevation
- Direction of flow
- Ordinary High Water elevation and location
- Limits of riprap

Roadways

- Stationing & CL of roadway below.
- Actual minimum vertical clearance to roadway below. 16 ft. minimum. 16.5 ft. recommended for future resurfacing. 17 ft. minimum and 17.6 ft. recommended for pedestrian overpasses.

Railroads

- Name of railroad.
- Horizontal clearance to obstruction.
- Actual minimum vertical clearance to railroad below.

Curve Information

- Vertical curve data and profile sketch.
- Horizontal curve layout data.

Traffic Data

Traffic data will be shown by using the cell (AC=TRDATA)

TRAFFIC DATA		
YEAR	.	.
ADT	.	.
DHV	.	.
HEAVY TRUCKS	. %	. %

AC=TRDATA

Hydraulic Information

Hydraulic information for all stream crossings shall be provided by the Bridge Hydraulic Section and shown by using one of the three available cells (AC=HYDRA1, AC=HYDRA2, AC=HYDRA3) shown below.

Format to be used without road overflow:

BRIDGE HYDRAULIC INFORMATION
STREAM:
D.A. = SQ. MI.
Q100 = CFS (BASE FLOOD)
H.W. ELEV. = FT. (D. S. SIDE)
W.W.A. BELOW H. W. = SQ. FT.
Q (OHW) = CFS
ORDINARY HIGH WATER ELEV. = FT.
Q100 GENERAL SCOUR = FT.
Q100 LOCAL SCOUR = FT.
Q500 SCOUR ELEV. = FT.

AC=HYDRAI

Format to be used with road overflow:

BRIDGE HYDRAULIC INFORMATION
STREAM:
D.A. = SQ. MI.
Q100 = CFS (BASE FLOOD)
Q100 = CFS (BRIDGE - BASE FLOOD)
H.W. ELEV. = FT. (D. S. SIDE)
W.W.A. BELOW H. W. = SQ. FT.
Q = CFS (OVERTOPPING FLOOD)
LOW ROAD ELEV. = FT.
Q (OHW) = CFS
ORDINARY HIGH WATER ELEV. = FT.
Q100 GENERAL SCOUR = FT.
Q100 LOCAL SCOUR = FT.
Q500 SCOUR ELEV. = FT.

AC=HYDRA2

Format to be used with an overflow structure:

BRIDGE HYDRAULIC INFORMATION
STREAM:
D.A. = SQ. MI.
Q100 = CFS (BASE FLOOD)
Q100 = CFS (BRIDGE - BASE FLOOD)
H.W. ELEV. = FT. (D. S. SIDE)
W.W.A. BELOW H. W. = SQ. FT.
Q (OHW) = CFS
ORDINARY HIGH WATER ELEV. = FT.
Q100 GENERAL SCOUR = FT.
Q100 LOCAL SCOUR = FT.
Q500 SCOUR ELEV. = FT.

AC=HYDRA3

2.1.5 - Plan Revision Procedures

Advertised Projects

If a project has been advertised and has not been awarded, original Plan Sheets are available through PS&E. Plan changes will be made through PS&E, and a Contract Addendum will be sent out to bidders by the Contracts Section. Bidders are responsible for passing Addendums on to their subcontractors. Normally, revisions at this stage in the contract letting are limited to changes that affect the bidding.

Award Contract

The original Title Sheet and Summary of Quantities Sheet are available in the Roadway vault after a contract has been awarded (Let). Bridge Plan Sheets are available in the Bridge Division vault. All projects with Federal funding that require a plan revision shall follow the following process:

Items that require a plan revision need to be discussed with the FHWA prior to the revision and FHWA approval is required before proceeding. Roadway Design will be the liaison with the FHWA.

Upon initial approval from the FHWA, all revised plan sheets shall be labeled “Draft Plan Revision X” in red. The revised plans in a .pdf format and a letter summarizing the revision description, justification, and quantity changes shall be sent to Roadway Design. Roadway Design will create and submit the FHWA Plan Revision Letter.

After receiving the FHWA approval of the draft revision, the “Draft” shall be removed from the label and full sized bridge plans sent to Roadway Design.

On projects without federal funding, the above process shall be followed excluding the “Draft” label and the FHWA involvement.

Roadway Design will submit the full sized plans, and in the case of federally funded projects, the Approved Plan Revision Letter to the Construction Office. The Construction Office will provide the required prints for all parties

Consultant Revisions

Consultants will **not** make revisions to the Title Sheet, Summary of Quantities, nor provide a letter to the Construction Engineer. This will be done by the Bridge Division.

Revision Detailing

Plan changes are to be made only on the full size original Plan Sheets. Full size Plan Revisions may be submitted on CAD reproductions in place of the full-size original sheets as long as they are an exact copy of the original Contract Plans; which will include all information added to the plans after the Bridge Division turned them in to the Roadway Designer. A log of all revisions will be documented on the plans using the following procedures:

- All revised sheets must indicate the items listed below in the top right-hand corner; an example is shown at right.

  1. Revision symbol — R/1
  2. Date of revision — 1 JUL, 10
  3. When applicable: ”Added Sheet” or “Deleted Sheet”

- Each change will be boxed with a line through it, **Never Erase**; and be labeled with a revision symbol similar to the following example:

~~Error~~ Correction R/1

Revision Symbols

Revision symbols consist of a “R/#” contained in a circle. Revision symbol numbers will be consecutive (R/1, R/2, etc.) based on the date the revision is made to the contract. When assigning a new revision number, the last recorded revision will be shown on the Title Sheet. Revisions may have more than one plan item change.

Title Sheet

The Title Sheet on all revisions must indicate the sheet(s) which have been revised by placing the revision symbol and the list of sheet number(s) beside it in the Title Sheet Index to the appropriate sheet description.

Quantities

Revised quantities will be shown on (Roadway) Summary of Quantities Sheet and on the (Bridge) Front Sheet. The Summary of Quantities Sheet will not need a revision if a revision does not alter the quantities. The Bridge Front Sheet will not need to be revised unless other items on the Front Sheet require a revision.

Adding Plan Sheets

In the event a new sheet is added to the plans, the added sheet number should be based on the previous sheet number in the plans with an “A” on the end, for example: 13A or 27A.

Deleting Plan Sheets

If an entire Plan Sheet is to be deleted, a large heavy “X” must be placed across the entire sheet.

Adding Special Provisions

When the Plan Revisions add Pay Items not already in the contract or in any way create the need for a special provision, the special provision shall be submitted with the Revised Plan Sheets.

2.1.6 - Bridge Quantity Tolerance Policy

Tolerances

Excavation

Excavation (Established Quantity)	5.0	CY
Earthwork Measured in Embankment	10.0	CY

Concrete

All Concrete Quantities	0.1	CY
Class I Repair	1.0	SY
Class II Repair	1.0	SY
Class III Repair	1.0	SY
Concrete for Overlay – SF	0.1	CY
Placing, Finishing & Curing Concrete Overlay – SF	1.0	SY

Steel

Epoxy Coated Reinforcing Steel	5.0	LB
Structural Steel	5.0	LB
Bearing Piles	1.0	LF
Sheet Piles	1.0	SF

Slope Protection

Broken Concrete Riprap	5.0	TON
Rock Riprap, Type “A”	5.0	TON
Rock Riprap, Type “B”	5.0	TON
Rock Riprap, Type “C”	5.0	TON
Concrete Slope Protection	1.0	SY
Riprap Filter Fabric	1.0	SY

Miscellaneous

Bridge Deck Grooving	5.0	SY
Bridge Joint Nosing	0.1	CF
Railings (Including Chain Link Fence)	1.0	LF
Salvaging and Placing Topsoil	5.0	SY
Granular Backfill	5.0	CY
Subsurface Drainage Matting	1.0	SY
All Expansion Joints (not joint filler)	0.1	LF
All Conduit in Bridge	1.0	LF

Twin Structures

All twin structures must have the pay quantities separated for each structure.

2.1.7 - Channel Work

General Payment Description

Channel work specified on the Data Sheet refers to cleaning out debris, filling in scour holes or reshaping a section of the channel at the bridge site.

Pay Limits for Channel Work

The pay limits provided for channel work in the Bridge Plans will be from ROW to ROW (or as specified on the Data Sheet); and from CL abutment to CL abutment.

When Group 6 (Bridge work) is the only Group in a contract, the Roadway Designer is responsible for other grading work not included in the channel work.

Some projects may have extended work beyond the ROW, excessive excavation (fill), spur dike, etc. In these situations, the Bridge Plan Pay Items may pay for only a portion of the work required in the Data Sheet. Payment for extensive channel work (and riprap) beyond the Bridge Plan quantity limits may be provided in the Roadway Plans as group work other than Group 6. The Bridge and Roadway Designer will decide how the work is shown in the Plans and how the limits of payment will apply.

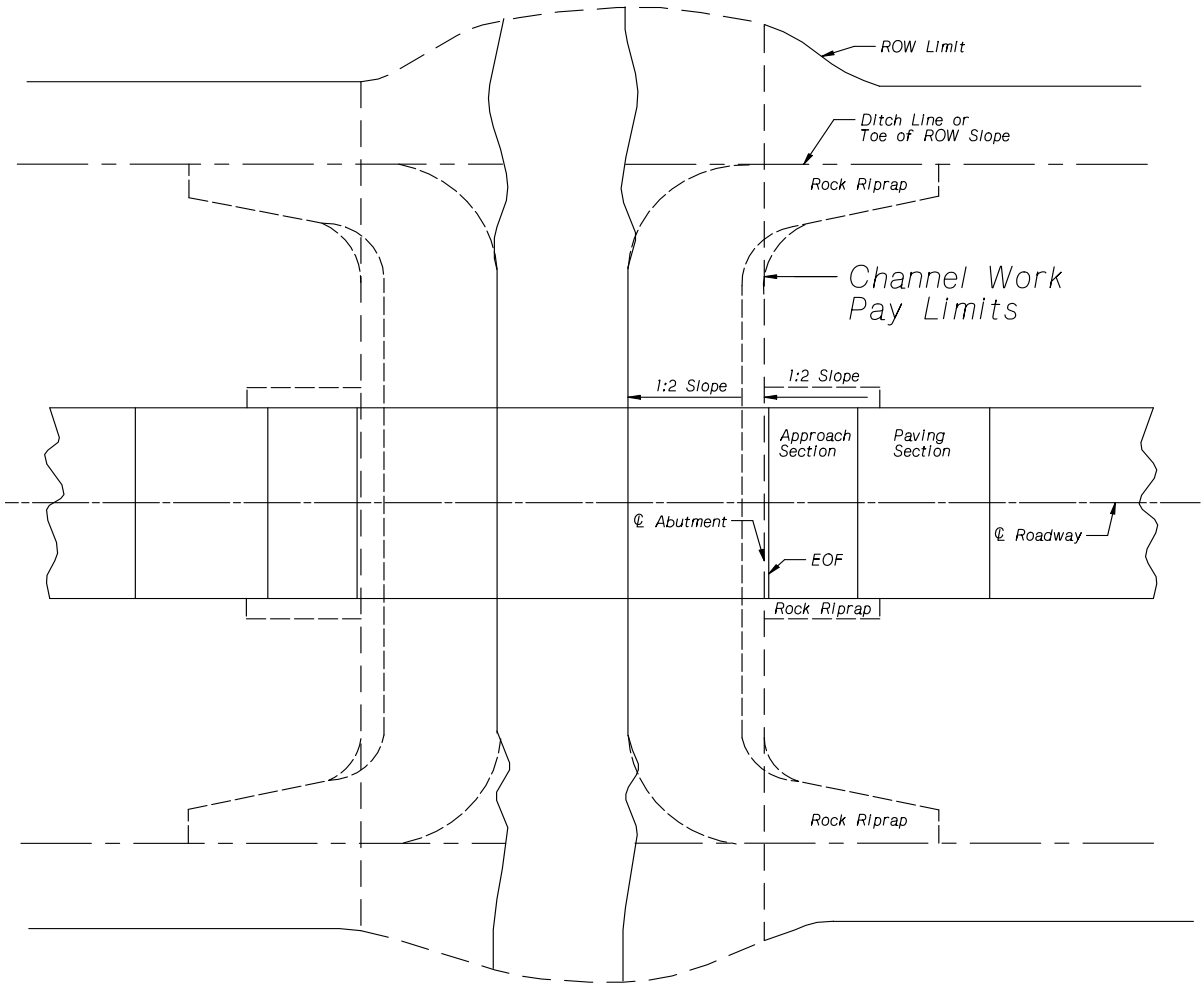

Quantity Calculation

The Hydraulic Data Sheet will state preliminary quantities for riprap and channel work. These quantities must be checked by the Bridge Designer.

The gross cross-sectional area will be based on the new and existing ground profiles used in the hydraulic analysis. Usually, quantities will not be based on the Average End Area Method since only one cross-section at the bridge is provided.

The net cross-sectional area used for quantities will be the greater area of the excavation or the fill. The net cross-section will be projected upstream and downstream between the pay limits to calculate the volume of excavation.

Pay Items

Either **"Excavation (Established Quantity)"** (CY) or **"Earthwork Measured in Embankment"** (CY) will be used to provide payment for channel work. "Excavation (Established Quantity)" will be provided if the greatest net volume is excavation, and designers should provide Standard Note # 011 on the Front Sheet. The alternate Pay Item is "Earthwork Measured in Embankment", which will be used if the greatest net volume is fill and designers should provide Standard Note # 012 on the Front Sheet.

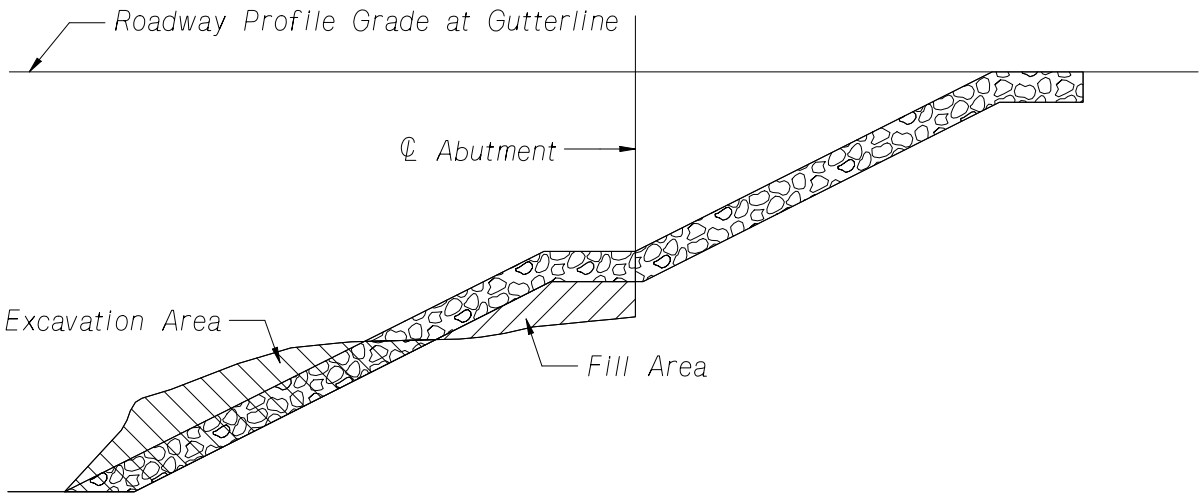

TYPICAL NET SECTION AREAS

2.1.8 - Shop Plans Review Policy

Definitions:

"Shop Plans"

Shop Plans are produced by the Fabricators and define how material is to be prepared assembled finished, and/or erected.

"Fabricator"

Fabricator refers to the facility(ies) performing shop activities such as cutting, welding, punching, drilling, cleaning, and painting of structural components.

"Shop Plan Review"

Review of the Fabricator's shop plans is to verify that the plans are consistent with contract documents.

Responsibilities:

"Fabricator"

The Fabricator is responsible for providing shop plans that accurately show the appropriate details, dimensions, materials, and all necessary requirements to fabricate and erect components of the structure in conformance to the contract documents.

"NDOR and Contractor"

NDOR and the Contractor are responsible for reviewing the shop plans to ensure that the Fabricator has correctly interpreted the intent of the contract documents.

In-House Shop Plans Review Procedure

Contractor approves and sends the plans to Construction Division with a stamp or authorization letter.

Construction Division sends the plans to the Bridge Division.

1. The Office Manager records receiving the shop plans.
2. Assistant Bridge Engineer distributes the shop plans.
3. If the Contractor's stamp or authorization letter is missing, the plans shall be returned to Construction for resubmittal.
4. If any shop drawing has welding details, one set will be sent to the Steel Fabrication Inspection Unit for review.
5. Plans are reviewed. (See Shop Plans Review Items) Incorporate any Inspectors' remarks or corrections.
6. Stamp each sheet (preferably in the lower right-hand of each sheet) indicating the level of acceptance. The three options within the stamp are as follows:
    a. No exceptions taken
    b. Make corrections noted
    c. Amend and resubmit
7. Write a letter describing the conditions of acceptance.
    a. There are three form letters available, one for acceptance, one for acceptance if minor corrections are made, and one for rejection.

8. If plans are to be amended and resubmitted, keep one red marked copy and send two red marked copies along with a form letter to Construction. These shop drawings must be resubmitted and be treated as new shop plans.
9. Red mark each set of shop plans if minor corrections are to be made.
10. Distribute accepted shop plans as follows:
    a. File one reviewed copy of shop plans in the project file in the vault.
    b. For all shop plans pertaining to steel fabrication, one copy must be given to the Fabrication Inspection Unit.
    c. Forward all remaining copies along with an attached letter describing the conditions of acceptance to the Construction Division for distribution.
    d. The Construction Division will distribute these copies to Materials and Research, Project Manager, Contractor, and Fabricator.
11. Record the departure on Office Manager's shop plan list.

Note: The original of every transmittal letter should be placed in the correspondence file.

Shop Plans are microfilmed after the project is completed in the field.

Electronic Shop Drawing Review

1. Construction Division will notify, by email, Bridge Division's Highway Bridge Data Technician that a shop drawing is in Falcon and ready to be reviewed.
2. The email will contain the Control Number for the project.
3. The Bridge Division reviewer will check out the shop drawing from Falcon at the location: Environment / District # / Control Number / Contract Admin / Shop Drawings / Preliminary / Bridge.
4. The reviewer (and Steel Fabrication Inspection Unit if required) will review the drawing and make all necessary markings and stamping in Acrobat.
5. The reviewer will check the file back into Falcon and email the Bridge Division's Highway Bridge Data Technician that the shop plans have been reviewed.
6. The Bridge Division's Highway Bridge Data Technician will send an email to the Construction Division (dor.ShopDrawings@nebraska.gov) stating that the drawing has been reviewed and is ready for distribution.
7. If the reviewer is a Consultant the drawing will be sent to and received back from the Consultant through the NDOR FTP site.

Consultant Shop Plans Review Procedure (If Consultant is under contract for the reviewing)

Contractor approves and sends the plans to Construction Division with a stamp or authorization letter.

Construction Division sends the plans to the Bridge Division.

1. The Office Manager records receiving the shop plans.
2. Section Head distributes the shop plans.
3. If the Contractor's stamp or authorization letter is missing, the plans shall be returned to Construction for resubmittal.
4. If any shop drawing has welding details, one set needs to be sent to the Steel Fabrication Inspection Unit for review.

5. Incorporate any Inspector's remarks or corrections before sending all of the plans to the Consultant.

Send the plans to the Consultant under contract.

6. Attach a letter indicating which Fabricator the shop plans are from.
7. Record sending the plans to the Consultant on Office Manager's shop plan list.

Stamped Shop Plans received from Consultant

8. The Office Manager records receiving of the shop plans.
9. Write a letter describing the conditions of acceptance.
    a. There are three form letters available, one for acceptance, one for acceptance if minor corrections are made, and one for rejection.
10. If plans are to be amended and resubmitted, keep one red marked copy and send two red marked copies with a letter to Construction. These shop drawings must be resubmitted and be treated as new shop plans.
11. Red mark each set of shop plans if minor corrections are to be made.
12. Distribute accepted shop plans as follows:
    a. File one reviewed copy of shop plans in the project file in the vault.
    b. For all shop plans pertaining to steel fabrication, one copy must be given to the Fabrication Inspection Unit.
    c. Forward all remaining copies, along with an attached letter, describing the conditions of acceptance to the Construction Division for distribution.
    d. The Construction Division will distribute these copies to Materials and Research, Project Manager, Contractor, and Fabricator.
13. Record the departure on Office Manager's shop plan list.

Note: The original of every transmittal letter should be placed in the correspondence file.

Shop Plans are microfilmed after the project is completed in the field.

County Shop Plan Review Procedure for Projects

1. Prior to the letting, the Agreements Section in Project Development will prepare an agreement with the County's Consultant to review shop drawings, calculate girder shims, and provide construction consultation. Exceptions to this may be when the Design Consultant is no longer available.
2. Contractor approves and sends the shop drawings to the Construction Division with a stamp or authorization letter.
3. The Construction Division will send any shop drawings with welding details to the Steel Fabrication Inspection Unit in the Bridge Division for review.
4. The Steel Fabrication Inspection Unit will review the welding details and return the shop drawings to the Construction Division.
5. The Construction Division will send the shop drawings to the Consultant.
6. The Consultant will review the shop drawings and return them to the Construction Division.

7. The Construction Division will distribute the reviewed shop drawings as follows:
   - One copy will be sent to the Bridge Division for the project file.
   - One copy will be sent to the Steel Fabrication Inspection Unit in the Bridge Division.
   - Remainder of copies will be distributed to Materials and Research, the Project Manager, Contractor, and Fabricator.

Shop Plan Review Items

The following items shall be considered essential for reviewing all shop plans:

1. **General Items**
   - Project Number, Control Number, and Structure Numbers are required on each sheet. (Preferably on the lower right-hand corner)
   - Material specifications.
   - Primary dimensions.
   - Girder length, span length (distance between bearings or other points of support) and girder layout, where applicable.
   - Weight per foot for rolled shapes and concrete girders.
   - All dimensions of bearing devices.
2. **Steel Girders**
   - Thickness and width of plates in primary members and splices.
   - Diameter, specifications, grade of mechanical fasteners, and coating, if required.
   - Camber and blocking ordinances.
   - Specification, grade and toughness testing requirements for all components.
   - Size of fillet welds, appropriate partial joint penetration, and complete joint penetration weld configurations.
   - Shop butt weld splice locations.
   - Location of tension and compression zones in welded members.
3. **Bolted Splices**
   - Size of all plates.
   - Number, size, and spacing of bolts.
   - Bolt hole edge distance.
   - Fill plates, if required.
   - Direction of rolling.
4. **Cross Frames and Diaphragms**
   - Location and spacing.
   - Bolt edge distance, spacing, and compatibility with diaphragm/cross frame connections.
   - Direction of rolling.
5. **Prestressed Girders**
   - Jacking force.
   - Strand size and location.
   - Shearing reinforcing size and location.

6. **Post-Tension Girders**

- Details, description, and specifications of anchoring devices.
- Jacking.
- Stressing sequence.
- Anchor block dimensions and reinforcement.
- Center of gravity of ducts and post-tensioning tendons matches contract plans.
- Seating, friction, and time dependent losses.
- Elongation of strands in all tendons. This will be compared with the field measurements.
- Type of ducts.
- Grout tube, grout vent details, and locations.
- Strand positions in conduit in sag and summit tendon curves.
- Geometric details (block out and coupler details).

2.1.9 – Quality Control and Quality Assurance (QC/QA) Practices in NDOR Bridge Design

These policies and procedures are intended to provide guidance for detecting and correcting bridge design errors before the design plans are made final and to provide a means for verifying that the appropriate design calculations have been performed, that the calculations are accurate, and that the specifications for the load-carrying members are adequate with regard to the expected service and operation loads of the structure.

Quality Control (QC): Procedures for checking the accuracy of the calculations and consistency of the drawings, detecting and correcting design omissions and errors before the design plans are finalized, and verifying the specifications for the load-carrying members are adequate for the service and operation loads.
Quality Assurance (QA): Procedures for reviewing the work to ensure that quality control is in place and effective in preventing mistakes, and consistency in the development of bridge design plans and specifications.

<u>Quality Control Policies and Procedures:</u>

1. The Bridge Office Policies and Procedures (BOPP) Manual is available for all Bridge Designers, Checkers, and Reviewers and shall be adhered to in order to provide for a uniform and consistent oversight in common bridge design activities.
2. All Bridge Plans shall be designed OR checked for structural integrity by a Professional Licensed Civil Engineer or Structural Engineer registered in the State of Nebraska.
3. The Designer and Checker's experience should be commensurate with the complexity of the bridge being designed.
4. Each individual Designer and Checker shall be responsible for invoking their own Quality Control measures for self-checking their work for accuracy and correctness.
5. The Plan Checker shall be considered the initial level of the Quality Control portion of the Design Process. All primary structural components, including superstructure, bearings, joints, and substructure components shall be independently checked to assure accuracy and correctness in meeting the design requirements and expectations of the bridge owner. The assumptions of the bridge design including general conditions and loadings shall be documented. All Consultants performing Bridge Design activities are similarly required to perform these independent checks as specified in the contract documents.
6. The Bridge Division has at least two independent commercially available software options for the design of all primary structural elements. The Checker shall use the alternate commercial software for checking the primary structural elements. The Checker may use the same commercial software as the Designer for checking their own work.
7. An Assistant Bridge Engineer, Bridge Designer, or Consultant of Record shall sign and date their PE stamp on each sheet of the Bridge Plans. The Geology Sheets and the Pile Layout Sheets shall also be stamped, signed, and dated by the Geotechnical Engineer.
8. All bridge plan sheets shall include the initials and dates of the appropriate Designer, Checker and Detailer.
9. Special provisions shall be identified by the appropriate author in responsible charge and shall be checked.

<u>Quality Assurance Policies and Procedures:</u>

1. The Team Leader or Section Head shall perform an independent review of all bridge plans to ensure Quality Control procedures have been performed and shall be considered to be the "Reviewer". This task is primarily performed through a thorough review of the BOPP Manual and individual checklists against the final plans.

2. All Consultant designed State Bridge Plans are required to conform to the provisions of the BOPP Manual. NDOR shall conduct an in-house review of all Consultant bridge plans at the 75%, 90%, and 100% completion levels to ensure a high degree of accuracy and conformance to the BOPP Manual. Additionally, all Local Bridge Plans let through NDOR shall be submitted to the Local Projects Division to be routed to the Bridge Division for review in accordance with the LPA Manual.
3. A high-level QA review by a special panel of professionals specifically appointed by the bridge owner shall be employed for major projects involving unusual, complex, and innovative features. This special panel is often comprised of University of Nebraska Department of Civil Engineering Professors and Researchers.
4. An independent Load Rating of all bridge designs for both State and Local projects shall be performed. This rating often utilizes independent software to verify the load carrying capacity of the primary superstructure elements.
5. An independent review of all bridge plans by the Plans, Specifications and Estimates (PS&E) Section of the Construction Division is performed on all bridge plans.
6. All Shop Plans shall be reviewed by the Designer or Checker for conformance with the Bridge Plans and Design Intent.
7. Bridge Division personnel regularly participate in field engineering reviews during design, construction, and in-service use.
8. For Consultant designed bridges the Consultant shall submit their QA/QC procedures.

SECTION 2.1.10 Bridge Division CAD File Naming Convention

Electronic files of bridge plans shall be created using Microstation software.

File naming shall be of the following convention.

File Naming Convention:

[Structure number]_[Structure type].dgn

Structure number shall follow the format given in Section 2.1.3 with the use of an underscore(_) where possible after the highway. Examples include S077_12668, S080_45180L, and SL56C00200.

Structure type shall be one of the following:

CIT – Concrete Inverted Tee	SCB – Steel Combination (Rolled Beam & Plate)
CPG – Concrete Prestressed Girder	SPG – Steel Plate Girder
CSB – Concrete Slab Bridge	SRB – Steel Rolled Beam
HYD – Hydraulic Channel	TRS – Truss
PED – Pedestrian	TSL – TS&L

The file extension will always be .dgn.

S077_12668_CSB.dgn is a concrete slab bridge on US77 at reference post 126.68. S080_45180L_SRB.dgn is a steel rolled beam on the left structure of twin structures on Interstate 80 at reference post 451.80. SL56C00174_PED.dgn is a pedestrian structure on State Link 56C at reference post 001.74.

When files are stored in Falcon, the following are required:

The **Falcon file description** shall indicate the type of work shown in the plans. Examples are new, replace, widen, repair, etc.. File descriptions can include # spans, bridge length, etc.. as space allows.

Required Reference File Logical Names:

For printing purposes **Border Sheets** must use a logical name that begins with “s” or *border*”. The ‘*’ can be blank. Examples are s1, border2, indexborder.

SECTION 2.2: GENERAL DESIGN ITEMS

2.2.1 - Definition of Bridge Terms

Term	Definition (as used in this manual)
Superstructure	All portions of the bridge above and including the girder bearing devices or above the bottom of the slab in the case of slab bridges.
Substructure	All portions of the bridge below the girder bearing devices or below the slab in the case of slab bridges.
NDOR Standard Specifications	Nebraska Department of Roads Standard Specifications for Highway Construction.
EOF	An acronym for End of Floor, which is the end of the bridge deck at grade.
Live Loads	H and HS loadings as defined in Standard Specifications for Highway Bridges 17th Edition & HL-93 as defined in AASHTO LRFD Bridge Design Specifications.
Pier	Bridge supports between abutments that have concrete footings with or without piles.
Bent	Bridge supports between abutments that are supported by piles.
Berm Elevation	The elevation at the abutment berm for the top of the concrete slope protection; or the bottom of the riprap. This elevation must be shown on the General Plan and Elevation Sheet.
Slope	Slope is defined as the ratio of run to rise. In written form, the first number indicates run and the second number indicates rise, i.e., 2:1 (run : rise).
Contractor	When the term “Contractor” is used, it shall mean the person that is awarded the project and must be the only terminology used in the Plans to identify who is doing the work. Plans shall not refer to other subcontractors, such as: Grading, Bridge, or MSE Contractor. This implies that work may be the responsibility of someone other than the Prime Contractor.
Contractor’s Access Bridge	Pay Item for a temporary crossing to be designed, constructed, and removed by the Contractor for use in construction on a highway bridge.
Contractor’s Access Crossing	Pay Item for a temporary crossing to be constructed and removed according to Roadway Design Plans for use in construction on a highway bridge.
PS&E	Project Scheduling and Estimate Section of the Construction Division.

2.2.2 - Bridge Loading Policy

Impact Loads

The following tables are intended to provide consistent application of impact loading on various components of bridge structures and to clarify AASHTO LRFD Bridge Design Specifications.

Apply Impact Loads	Do NOT Apply Impact Loads
All portions of the superstructures	Bearings regardless of type.
The portion of the pier above the ground line, except the footing	Abutments and retaining walls.
The portion above the ground line of concrete and steel piles that are rigidly connected to the superstructure.	The portion of the pier below ground line and the pier footing.
	Design bearing of the pile.
	Sidewalk loads.
	Timber structures.

Example

Open pile bent on concrete slab bridge with piling embedded in bent cap and the bent cap is rigidly connected to slab or superstructure. Therefore, that portion of the piling above the ground line shall include impact in its design. However, the design bearing required for the pile shall not include impact.

Permanent Loads

Dead Loads

Bridge deck, haunch, stay-in-place forms (5.0 psf), and diaphragms are considered a non-composite dead loads acting on the girders before concrete deck has cured.

Superimposed Dead Loads (Loads on composite section)

Railings, wearing surface, utilities and signage are considered superimposed dead loads distributed equally to all girders or distributed uniformly across concrete slabs.

- Concrete Barrier or Rail: In general, concrete barrier or rail loads are distributed equally to all girders for normal cantilever conditions.
- Future Surfacing: Future surfacing is assumed to be 20 psf and shall be applied to all new superstructure and substructure designs. Future surfacing loads shall not be included in the deflection calculations for shims.
- Interior Median Curbs: Interior median curbs will be designed and specified in the Plans as a composite load. In other words, a construction joint is mandatory. (See details in Section 3.1.5)

Live Loads

NEW & RECONSTRUCTED

1. Meet the requirements of AASHTO LRFD Bridge Design Specifications HL-93 for live load. Live load distribution factors will be as specified by AASHTO LRFD Bridge Design Specifications.

2. For all bridges on the State highway system, the load factor for vehicular live load (LL) and vehicular dynamic load allowance (IM) for Strength I in Table 3.4.1-1, Load Combinations and Load Factors, of the AASHTO LRFD Bridge Design Specifications shall be increased from 1.75 to 2.0.

Existing Superstructures

A. REHAB – When the entire superstructure is being replaced, the new superstructure will be designed for HL93 using AASHTO LRFD Bridge Design Specifications.

B. WIDEN – The widened portion shall be designed to match the original design live load.

C. REDECK
Investigate the feasibility of strengthening the existing superstructure to HL-93

At a minimum the existing superstructure shall meet or be strengthened to meet a minimum of:

a. HS20 for bridges on the Interstate, Expressway, or Commercial Priority systems.

b. HS15 for all other bridges.

If the existing superstructure cannot be feasibly strengthened to the above requirements, the superstructure must be replaced.

For bridges that are widened and redecked, if strengthening is feasible for the existing superstructure, the widened portion shall be designed to match the strengthened design live load.

If it has been determined to widen a bridge that has an inventory rating less than HS20, a Justification Sheet shall be attached to the Bridge Design Data Sheet.

Existing Substructures

For all bridges that are to be widened or rehabbed, the Designer will evaluate each bridge substructure to ensure that it is capable of supporting the design load required in the superstructure. The substructure must be capable (by strengthening if necessary) of supporting the following design live loads:

a. HL-93 for existing substructures supporting new superstructures designed for HL-93 loading. If existing substructures cannot be strengthened to meet the HL-93 loading but yet meets the following requirements, a design relaxation to the “Nebraska Minimum Design Standards” needs to be obtained in order to use the existing substructures.

b. HS20 for bridges on the Interstate, Expressway or Commercial Priority systems.

c. HS15 for all other bridges.

2.2.3 – Structural Steel Connections Policy

Bolted Connections

All bolted connections for structural steel shall be fabricated with 7/8-inch high-tensile bolts that meet the requirements of ASTM A325.

Welded Connections

In general, Fabricators will use the minimum weld size in the AWS D1.5 welding code when weld sizes are not specified on the plans.

It is the Designers' responsibility to specify the required weld size in the plans for welds larger than the minimum.

2.2.4 – Approach Slab Policy

General Design

Approach slabs will be required on all State projects. Plans and elevation views of approach sections should be shown on the General Plan and Elevation Sheet of Bridge Plans.

For bridges that are to be widened, the existing bridge and location should be investigated to determine any deviations from the standard approach layout.

Design Criteria

Approach Section

The approach section length shall be 20 ft. from the end of the bridge floor to CL grade beam; see Grade Beam Policy for more information. The approach section reinforcing details shall be as shown in Section 6 (6.12 thru 6.14), Approach Slab Base Sheets. The depth of the approach section shall be 14 in. and placed above the abutment wing; see Wing Policy for more information.

Paving Section

The paving section length shall be 30 ft. from CL grade beam to the road pavement along CL clear roadway. The joint between the paving section and the roadway shall be perpendicular to CL roadway. For wide bridges and/or large skew angles, Designers shall consult with the Assisant Bridge Engineer on a case-by-case basis.

The thickness of the paving section shall be 14 in. The reinforcing details shall be as shown in Section 6 (6.12 thru 6.14), Approach Slab Base Sheets.

If abutment wings extend beyond the grade beam, changing paving section layouts is not recommended.

Designers shall show elevations of the end of pavement sections at left edge, center and right edge.

Reinforcement Layout

Longitudinal bar spacing is always measured perpendicular to CL roadway and placement is parallel to the CL roadway. Designers should check longitudinal bar lengths to verify if the skew dictates a shorter bar. Field personnel indicated that omission of these slight skew adjustments have caused problems for joint installation. Transverse bar spacing is always measured parallel to CL roadway. Placement may be perpendicular to CL roadway or skewed.

Roadway Joint

When the roadway is concrete pavement, use 3 in. joint filler (Fiber Type) topped with ½ in. joint sealant and 1 ½ in. x 18 in. smooth tie bars at 12 in. centers. When the roadway is asphalt, no joint is required.

Expansion Joint

Joint systems will be placed between the approach section and paving section in the approach slab. For information on approved expansion joint systems, see Section 3.1.7, Expansion Device Policy.

Two layers of SBS Modified Asphaltic Base Sheet placed on a steel troweled smooth surface will provide a bond breaker for bridge expansion between the approach section and the grade beam.

Longitudinal Joints

The approach and paving sections of bridge approaches should have a longitudinal joint placed at the centerline of the roadway or phase line if not phased about the centerline. On approaches where half the clear roadway exceeds 21 ft., additional longitudinal joints shall be placed at the edges of the 12' traffic lanes. Bridge Designers should check with the Roadway Designer for the location of the traffic lanes. The minimum spacing from the last joint to outside edge of approach should not be less than 10 ft.

Payment

The Pay Items **"Concrete for Pavement Approaches Class 47BD-4000"** (CY) and **"Epoxy Coated Reinforcing Steel for Pavement Approaches"** (LB) includes all concrete and steel for placement of the paving and approach sections, and all rail attached to the approaches.

Bridge Base Sheets

There is one reference file available for the approaches; (see Section 6). Zero, RHB, and LHB skews are shown on Sheets A, B, and C, respectively (Section 6.12 thru 6.14).

2.2.5 – Construction Joint Policy

Slab construction joints less than 8 ½ in. shall be indicated as a vertical line in the Plans, as shown below.

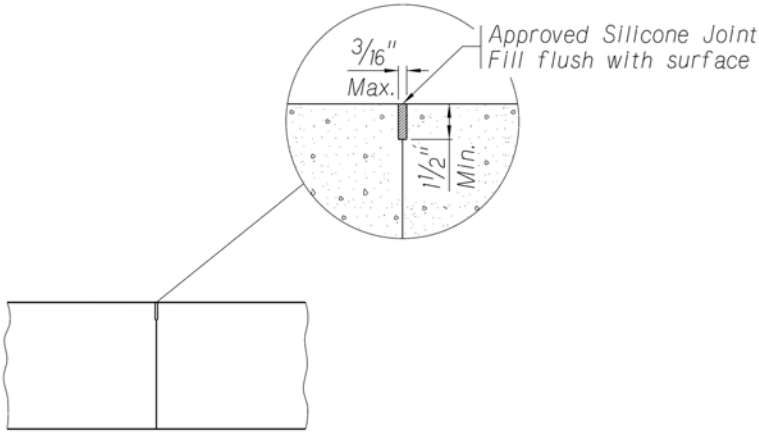

SLAB CONSTRUCTION JOINT

Not to Scale

The Contractor shall prepare and seal the joint according to the manufacturer's recommendation. Before sealing the joint wall surfaces shall be sandblasted to remove any deleterious material. After sandblasting the entire joint shall be cleaned with compressed air having a minimum pressure of 90 psi. The compressed air shall be free of any contaminates. The joint shall be dry at the time of sealing.

AC=JOINT

Slab construction joints greater than 8 ½ in. will provide a tapered blockout. The cell AC=JOINT2, shown below, may be used in th Plans.

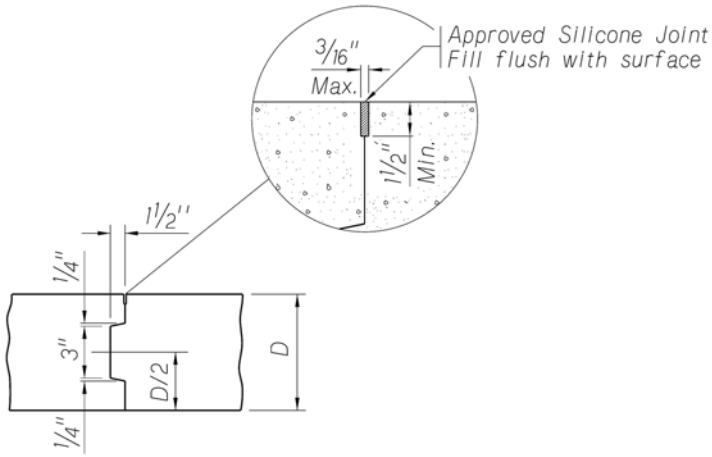

CONSTRUCTION JOINT

Not to Scale

The Contractor shall prepare and seal the joint according to the manufacturer's recommendation. Before sealing the joint wall surfaces shall be sandblasted to remove any deleterious material. After sandblasting the entire joint shall be cleaned with compressed air having a minimum pressure of 90 psi. The compressed air shall be free of any contaminates. The joint shall be dry at the time of sealing.

AC=JOINT2

2.2.6 – Temperature Movement Policy

General

Movements resulting from expansion and contraction due to temperature change will occur throughout the life of the structure. Temperature movement (TM) for any given location shall be based on the variations in temperature in this location. The Bridge Office Policy defines the Temperature Movement (TM) as the total anticipated movements due to the rise and fall of temperature. Other design policies may provide factors to modify (TM) calculations.

Temperature Movement Calculation

$$TM = [\Delta T]\ [\alpha]\ [L]$$

Where

ΔT = Design Temperature range

= 130°F for concrete deck on steel girder bridges. (-10° F to 120° F)
= 90°F for concrete applications. (0° F to 90° F)

α = Coefficient of thermal expansion

= 6.5×10^{-6}/°F for steel.

= 6.0×10^{-6}/°F for concrete.

L = Length from point of no movement to the point at which the length of expansion is desired.

2.2.7 – Utility Policy

General Utility Criteria

- Utilities may be attached to a new structure if the attachment is determined to be in the best interest of public agencies.
- Utility attachments will generally not be permitted on Interstate or Freeway bridges that have not been specifically designed to accommodate them, except to exclusively serve a highway facility.
- Utility attachments to existing structures crossing Interstate or Freeway highways are considered on an individual basis.
- The utility company shall be responsible for designing the support systems to be included in the Bridge Plans.
- All utilities shall be carried in protective conduit or pipe.
- Utility lines shall be suspended by means of cast-in-place anchors, whenever possible.
- Anchors driven using explosive type driving force methods shall not be allowed.
- Attachment of conduits to bridge handrail and guardrail components shall not be allowed.
- Clamping devices for attachment to structural members shall not be allowed.
- Welding or drilling holes in primary structural steel members shall not be allowed.
- Drilling or cutting holes in prestress and reinforced concrete girders shall not be allowed.
- Manholes used to service a utility shall not be located in the bridge deck, approach slabs or in the median. Such manholes shall be located beyond the edge of the roadway (pavement and shoulders).

Bridge Design

Bridge Designer shall be responsible for determining if any utilities are to be attached to the structure. This information will be obtained from the Utility Section of the Project Development Division.

When utilities are required on a structure, Bridge Designer shall determine the placement of the utility lines on the structure. Bridge Plans shall include the hardware specifications and details for the utility attachment as provided in the written correspondence.

The following information should be provided by the Utility Company and included on the Bridge Data Sheet: where the utility is relative to the limits of the bridge structure; number, type, size, and weight of utility lines; insert size and spacing; minimum bending radius for the conduit or pipeline specified; contact person for utility.

Superstructure Attachment

Utilities shall be placed beneath the structure's floor and inside the outer line of girders; and shall not extend below an elevation that is 1 ft. above the bottom flange. Utility lines will not be attached to nor supported by bent plate steel separators. Shop fabricated holes will be allowed to pass utility lines through bent plate separators. In which case, the separator holes shall be designed and sized to preserve the strength and stiffness of the member. Cast-in-place PVC sleeves or blockouts must be provided to pass utility lines through concrete diaphagms.

Concrete slab or inverted tee structures should have utilities placed in the concrete rail or barrier. Conduits cast inside the concrete slab or located inside the voids between inverted tee sections should be avoided but may be necessary.

Substructure Attachment

All utility lines extending through abutment walls shall use cast-in-place PVC sleeves. Utility installation through piers or wingwalls shall not be permitted. Utilities shall continue under the bridge approach section and below the grade beam. Utilities shall exit from under the paving section at an angle of 45° to CL roadway, 3 ft. min. beyond the end of the wing, and at a depth of 3 ft. ± 6 in. below grade. Bridge Designers shall use caution when placing the utility lines to avoid guardrail posts (wood and steel alternate post spacing).

Detailing

The location of utility CL shall be shown on the General Plan and Elevation Sheet. Elevation views of utilities in steel separators or in concrete shall be shown on the cross-section of the Roadway Sheets; and as necessary in other details to ensure the proper placement of the utility.

Payment

All additional cost attributed to the installation of the line shall be paid for by the utility company unless such attachments are made a part of or in lieu of utility relocation costs as determined by the Utility Section.

The additional cost of extra items such as structural steel and fabrication needed to support the pipeline and/or conduit beyond what is needed for highway purposes is estimated by the State at the following rates.

Bent plate separator modification**	$ 225.00	each
Insert installation	$ 3.00	each
Sleeves installation	$ 75.00	each
Conduit installation	$ 7.75.00	/ft
Engineering time (8 hrs. min.)	$ 31.00	/hour
Drafting time (10 hrs. min.)	$ 26.50	/hour

** This unit cost is based on 6 or more separators. If less than 6 separators are involved, the unit cost should be increased proportionately from $225.00 to $325.00 per separator.

Notes:

- Standard Note # 008 shall be modified and placed on the Front Sheet of the Bridge Plans.
- The actual name of the utility company, the name of the contact person and their telephone number must replace the generic text in Standard Note # 008.
- Standard Note # 009 shall be placed on the Front Sheet of the Bridge Plans.

2.2.8 – Lighting Policy

General Criteria

Lighting will be indicated in the Bridge Data Sheet. Bridge Designers should provide the Lighting Unit of the Roadway Design Division with a Bridge Sheet that shows the Bridge Plan and elevation view. Plan Sheet should also show the pier and abutment centerlines and stationing. The Lighting Section will then provide the lighting requirements and locations in a memo. This memo will be filed in the Bridge Division Correspondence File.

Light pole foundations and underdeck lighting should be shown in the Plan View on the General Plan and Elevation Sheet.

Light Pole Foundation Design

A standardized light pole foundation layout with reinforcement is shown in the Lighting Base Sheet, see Section 6 (6.24 thru 6.30). In general, 0.4 in./ft. of lighting reinforcement is added to the bridge deck reinforcement to support the light pole foundation. The standard design assumes the following criteria:

- 6 ft. - 6 in. is the maximum effective cantilever distance, (from the effective support to the outside edge of the bridge deck).
- Light pole base: 2 ft. square x 9 in. thick
- Light pole weight = 375 lb.: 42 ft. pole, 9 in. base, 0.14 in. / ft. taper
- Mast arm is 48 in. with a 42 in. rise. Mast arm weight = 35 lb.
- Luminaire weight = 50 lb.

PVC Conduit Layout

Conduits should be located in the concrete rail or concrete barrier as shown in the Base Sheets. Conduits will extend approximately 10 ft. beyond the exit from the concrete and terminating 10 ft. to 13 ft. from the outside edge of the roadway, 30 in. below grade with capped ends.

A plan view of the conduit layout (horizontal plan dimensions) must be provided in the Bridge Plans. Layouts will show the following items:

- Limits of Pay Quantity for 1 ½ in. Conduit in Bridge.
- Junction boxes, expansion fittings and capped ends of the conduit.

Junction Boxes

Nema 4, Type YR cast iron junction boxes 10 in. x 6 in. x 6 in. will be located in the bridge curb near each light pole foundation or pier cap to serve the under deck lights. Additional junction boxes should be provided when the direction of the conduit changes more than 180 degrees. Conduit stubouts ¾ in. will be shown from the junction boxes to the light base or underdeck lights. Stub out ends should be ¾ in. GRS or IMC conduit threaded, capped and have a 2 in. projection.

Expansion Fittings

Expansion fittings 4 in. minimum must be used at all locations where the conduit passes through expansion gaps, as shown in the cell (AC=EXPFTS).

For expansion movements greater than 4 in., larger fittings should be specified in increments of 2 in.

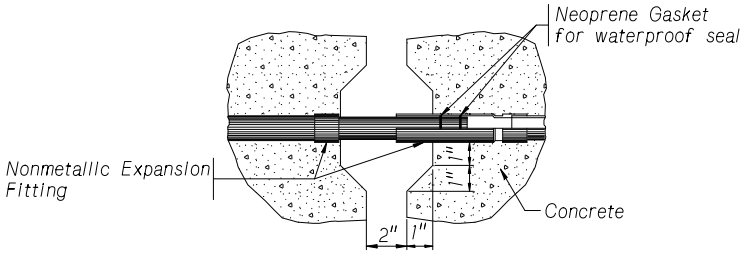

EXPANSION FITTING (4" Min. Movement)
Not to Scale

Light Pole Foundation Sheet

The Light Pole Foundation Sheet contains the details for a standard light pole foundation. There are detailing options on MicroStation levels that show a concrete rail, 2 ft. - 8 in. barrier, and 3 ft. - 6 in. barrier; see Section 6 (6.24 thru 6.30).

Payment

The concrete for the light pole foundation will constructed using bridge deck concrete and will be paid for as **“Class 47BD-4000 Concrete for Bridge”** (CY). The reinforcing steel should be labeled as "SX7X" bars on the Bill of Bar Sheet and paid for with the deck reinforcement as **“Epoxy Coated Reinforcing Steel”** (LB).

All conduit, junction boxes, expansion fittings, drains, Liquid-tight Flexible Conduit, couplings, anchor bolt assemblies, all other miscellaneous conduit, hardware and labor required for the installation of the conduit system will be subsidiary to the Pay Item, **“1 ½” Conduit in Bridge”** (LF) as stated in the standard Special Provision.

2.2.9 - Phased Construction Policy

If detouring the roadway or using a shoofly around the bridge are not practical or cost effective solutions, bridge construction shall be phased.

Temporary Traffic Lane Widths

It may be necessary to build the new bridge 1 ft. or 2 ft. wider to accommodate the temporary traffic lanes. Phased traffic should be provided with the maximum lane width available. Roadway Design, Traffic, and Bridge Divisions should jointly approve lane widths to meet the following minimums:

Interstate

- 14 ft. minimum for a single lane and 25 ft. for two lanes.
- 13 ft. - 6 in. minimum each lane for opposed traffic (head to head).

State Highways

- 12 ft. recommended and 11 ft. minimum.

Temporary traffic lane widths less than those shown above must be approved by the Bridge Engineer. Temporary traffic lane widths on the Interstate less than 12 ft. must have the approval of the Deputy Director.

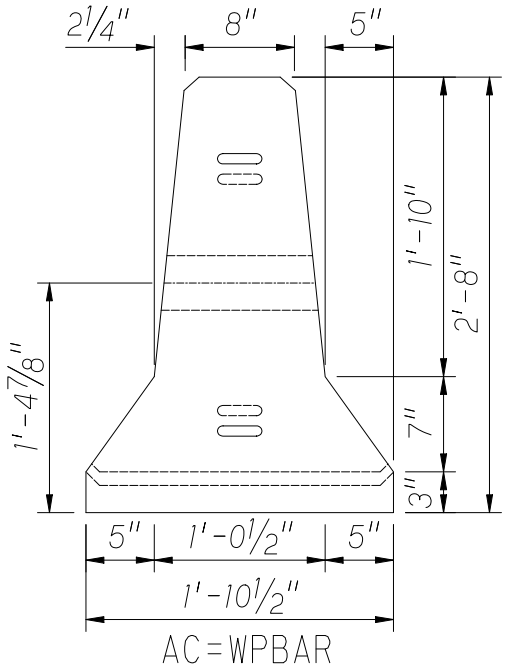

Temporary Barriers

Temporary Barriers have the New Jersey barrier shape as shown in the cell, (AC = WPBAR). The recommended distance between the barrier CL and the edge of the deck (or slab) is 3 ft. minimum for State Highways and 3 ft. - 3 in. for Interstate. If these dimensions cannot be attained, the barriers shall be anchored to the slab in accordance with the Roadway Design Division's Special Plan for Temporary Barriers. The assumed weight of barrier per foot should be 0.392 klf.

Reinforcement

Designers must allow enough distance between existing concrete and the joint to place the lap. Reinforcement lapped at phased construction joints should be shown in the plans as two bars, with different marks, and the minimum splice length dimensioned.

Temporary Supports

When a pier or bent requires temporary support for phased construction, the Front Sheet should indicate the Pay Item **"Temporary Supports"** (EA). A Special Provision for "Temporary Supports" must be included in the contract that describes payment and specifications.

Analysis

Phased conditions (cantilevers, piles, etc.) shall be anaylzed by the same code as the final condition (Phase I traffic may be analyzed by the original design code).

Piling

Unless supported by analysis, substructures carrying phased traffic (except grade beams) shall be supported by more than 2 piles.

Phased Construction Shoring

The Contractor must provide shoring as necessary to support the roadway embankment during construction phases. Bridge Plans will provide shoring for phased construction by using one of the two methods outlined below.

Phased Construction Shoring (continued)

Method 1:

This should be used when minimal shoring is expected.

- Shoring is not shown on the Plans.
- Payment is subsidiary to the Pay Items for **"Abutment Excavation"** (LS) and specified in the Preparation or Removal of Structure Special Provision.

Method 2:

This should be used when the plans require the shoring to be designed by a Professional Engineer. Items contributing to significant shoring would be cost, height or length of fill, and importance of project.

The Designer will determine whether or not shoring should be considered permanent Bridge Shoring or Temporary Bridge Shoring.

- Shoring that the Contractor may remove when the construction is completed will be labeled on the plans as "Temporary Bridge Shoring".
- Shoring that the Contractor may not remove, (flame cut 4 in. below concrete for example) will be labeled on the plans as "Bridge Shoring**"**.
- The approximate CL of shoring must be called out on the plans, typically on the Geological or General Plan and Elevation Sheet, in the locations where it is needed. Size of shoring and dimensions should not be used on the plans. Approximate stationing must be used to indicate locations of shoring to the nearest foot of accuracy ± (approximate Station 123+25 ±, for example).
- Bridge Shoring Special Provision 5.B-3 shall be included in the project contract.
- The Pay Items **"Bridge Shoring"** (LS) or **"Temporary Bridge Shoring"** (LS) will be shown on the Front Sheet as required. The Assistant Bridge Engineer will provide an estimate of the quantity SY for PS&E. The estimate will be calculated based on the exposed surface area of the shored soil.

Note:

The Bridge Division has decided to pay for the "Bridge Shoring" as a lump sum quantity because too many Contractors have bid and placed the shoring to the exact station or dimension given in the plans and failed to properly protect the roadway fill. Therefore, the plans will indicate approximate information for the purpose of bidding only.

MSE Wall Shoring

See Section 2.2.11.

Minimum Roadway Widths Required to Redeck Bridges in Phases

The following figures show the minimum roadway widths required to redeck bridges in phases assuming an 11' - 0" minimum temporary traffic lane. The figures have been developed for both 4 girder systems and 5 girder systems. The figures show the different scenarios for the setback width (1 ft. minimum with anchoring and 2 ft. minimum for slide) behind the temporary concrete protection barriers and the splicing of the deck reinforcing steel (mechanical and tension lap). The figures are based upon prestressed concrete girder superstructures. Temporary traffic lanes on less than 3 steel girders is not recommended.

MINIMUM ROADWAY WIDTHS REQUIRED TO REDECK BRIDGES IN PHASES
PRESTRESSED CONCRETE GIRDER SUPERSTRUCTURES
4 GIRDER SYSTEMS

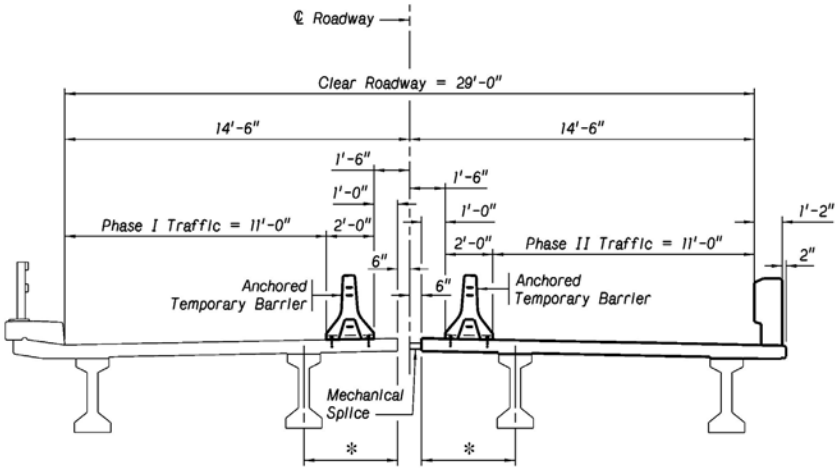

29'-0" Clear Roadway is the Required Width needed to Redeck a Bridge for:

- 4 Girders.
- Mechanical Splices for Slab Rebar Between Phases.
- 1'-0" Setback Behind Anchored Temporary Barriers.
- 11'-0" Minimum Traffic Lane.

29'-0" ROADWAY MINIMUM PHASING LIMITS

FIGURE #1

* Designer needs to verify load carrying capacity of existing and new slab cantilever before implementing.

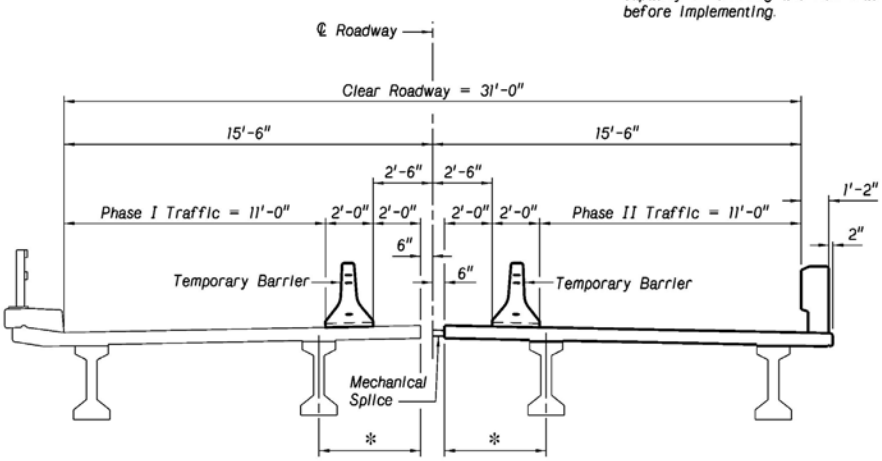

31'-0" Clear Roadway is the Required Width needed to Redeck a Bridge for:

- 4 Girders.
- Mechanical Splices for Slab Rebar Between Phases.
- 2'-0" Setback Behind Temporary Barriers.
- 11'-0" Minimum Traffic Lane.

31'-0" CLEAR ROADWAY MINIMUM PHASING LIMITS

FIGURE #2

MINIMUM ROADWAY WIDTHS REQUIRED TO REDECK BRIDGES IN PHASES
PRESTRESSED CONCRETE GIRDER SUPERSTRUCTURES
4 GIRDER SYSTEMS

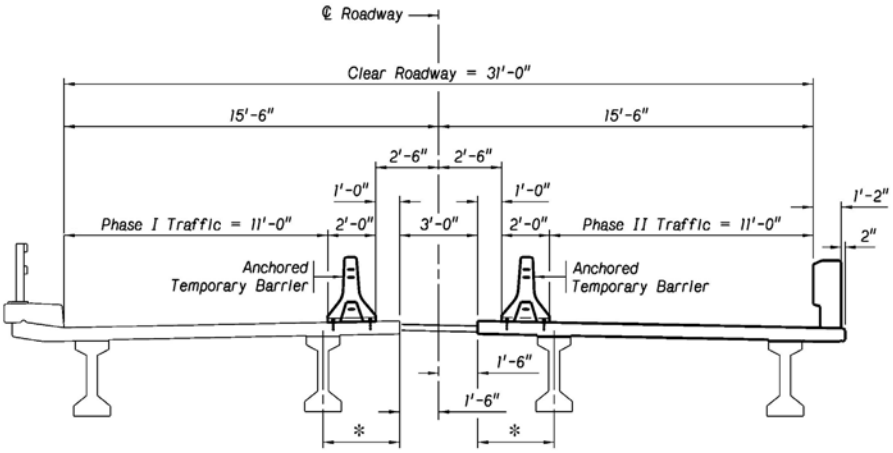

31'-0" Clear Roadway is the Required Width needed to Redeck a Bridge for:

- 4 Girders.
- Lap Splices of Rebar Between Phases.
- 1'-0" Setback Behind Anchored Temporary Barriers.
- 11'-0" Minimum Traffic Lane.

31'-0" CLEAR ROADWAY MINIMUM PHASING LIMITS

FIGURE #3

* Designer needs to verify load carrying capacity of existing and new slab cantilever before implementing.

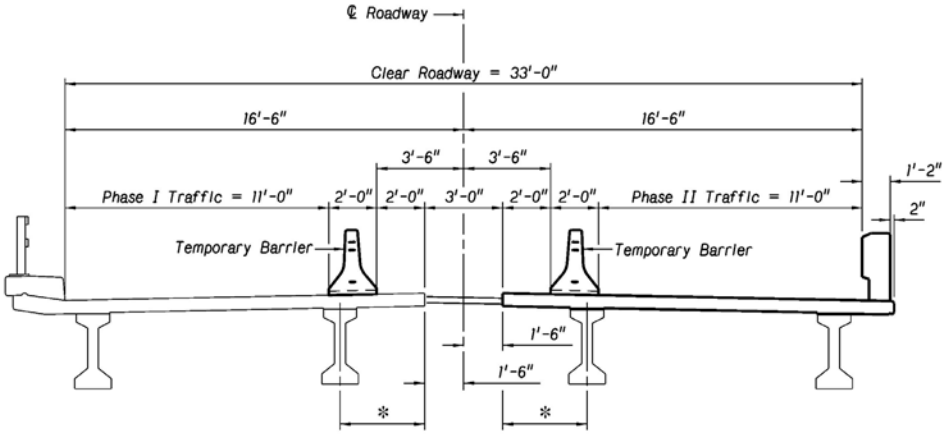

33'-0" Clear Roadway is the Required Width needed to Redeck a Bridge for:

- 4 Girders.
- Lap Splices of Rebar Between Phases.
- 2'-0" Setback Behind Temporary Barriers.
- 11'-0" Minimum Traffic Lane.

33'-0" CLEAR ROADWAY MINIMUM PHASING LIMITS

FIGURE #4

MINIMUM ROADWAY WIDTHS REQUIRED TO REDECK BRIDGES IN PHASES
PRESTRESSED CONCRETE GIRDER SUPERSTRUCTURES
5 GIRDER SYSTEMS

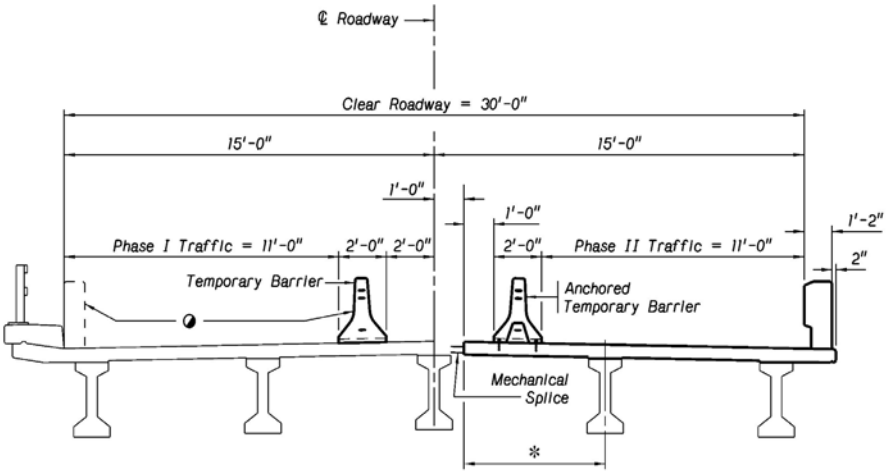

30'-0" Clear Roadway Is the Required Width needed to Redeck a Bridge for:

- 5 Girders.
- Mechanical Splices for Slab Rebar Between Phases.
- 1'-0" Setback Behind Anchored Temporary Barrier.
- 11'-0" Minimum Traffic Lane.

30'-0" ROADWAY MINIMUM PHASING LIMITS

FIGURE #5

* Designer needs to verify load carrying capacity of new slab cantilever before implementing.

◕ Provide Anchored Barrier If Needed to Clear Existing Updated Rail

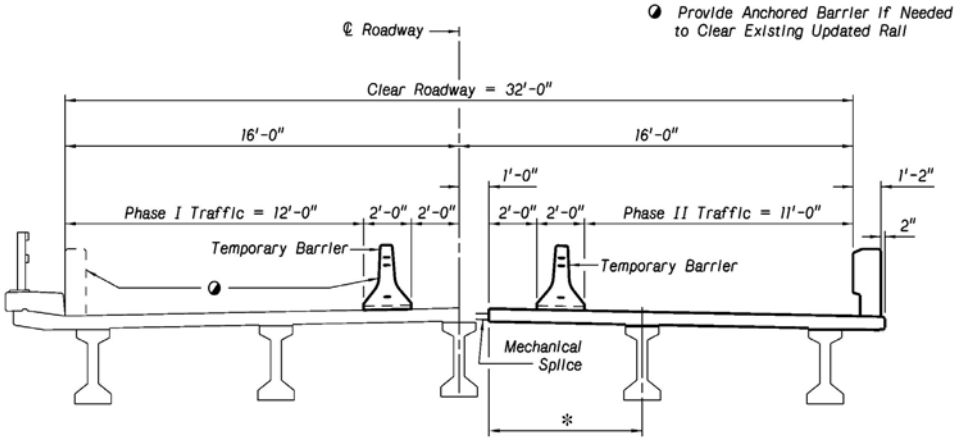

32'-0" Clear Roadway Is the Required Width needed to Redeck a Bridge for:

- 5 Girders.
- Mechanical Splices for Slab Rebar Between Phases.
- 2'-0" Setback Behind Temporary Barriers.
- 11'-0" Minimum Traffic Lane.

32'-0" CLEAR ROADWAY MINIMUM PHASING LIMITS

FIGURE #6

MINIMUM ROADWAY WIDTHS REQUIRED TO REDECK BRIDGES IN PHASES
PRESTRESSED CONCRETE GIRDER SUPERSTRUCTURES
5 GIRDER SYSTEMS

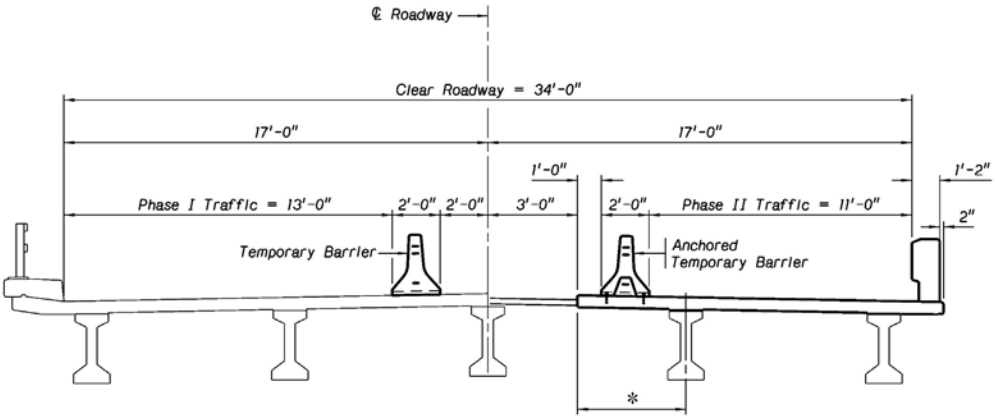

34'-0" Clear Roadway is the Required Width needed to Redeck a Bridge for:

- 5 Girders.
- Lap Splices of Rebar Between Phases.
- 1'-0" Setback Behind Anchored Temporary Barrier.
- 11'-0" Minimum Traffic Lane.

34'-0" CLEAR ROADWAY MINIMUM PHASING LIMITS

FIGURE #7

* Designer needs to verify load carrying capacity of new slab cantilever before implementing.

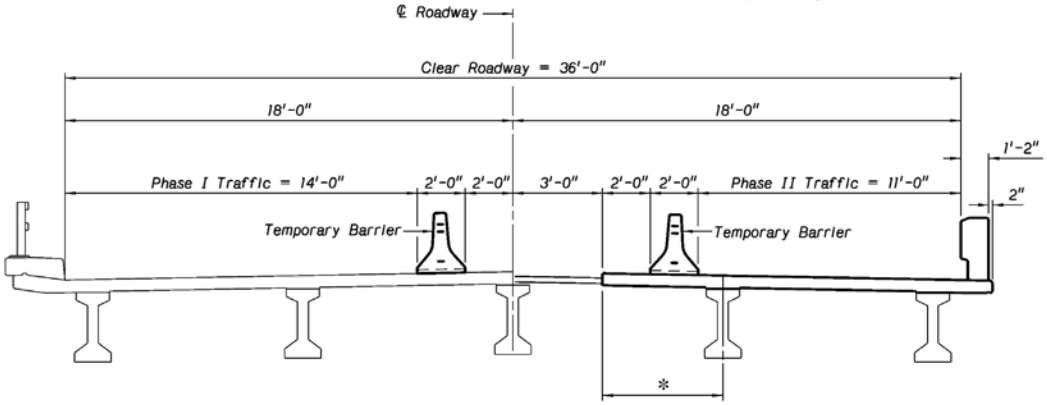

36'-0" Clear Roadway is the Required Width needed to Redeck a Bridge for:

- 5 Girders.
- Lap Splices of Rebar Between Phases.
- 2'-0" Setback Behind Temporary Barriers.
- 11'-0" Minimum Traffic Lane.

36'-0" CLEAR ROADWAY MINIMUM PHASING LIMITS

FIGURE #8

2.2.10 - Mechanically Stabilized Earth (MSE) Wall Policy

General Criteria

The following information must be provided on the Geology Sheet when the Bridge Data Sheet requires MSE wall.

- CL abutment to the front face of wall will be a minimum of 5 ft.
- Corrugated Metal Pipe (CMP) shall be placed around the portions of the piles located in the backfill zone. CMP size (18 in. or 24 in.), cutoff elevation, and length at each pile location. The size and quantity LF of CMP will be calculated by the Bridge Designer and provided to the Roadway Designer.
- Standard Note # 640.
- The top of the MSE wall will be a minimum of 2 ft. below the bottom of the girder.
- The bottom of the abutment concrete will be at least 8 in. below the top of the MSE wall.
- Phased construction will indicate a CL of MSE shoring, (do not locate).

The following detail has the Bridge Division requirements from above added to the detail for Roadway Division MSE Walls, Case 1 (Embankment), Case 2 (Excavation), and Case 3 (Settlement). Case 4 (Parallel Wall to Roadway) does not involve a bridge.

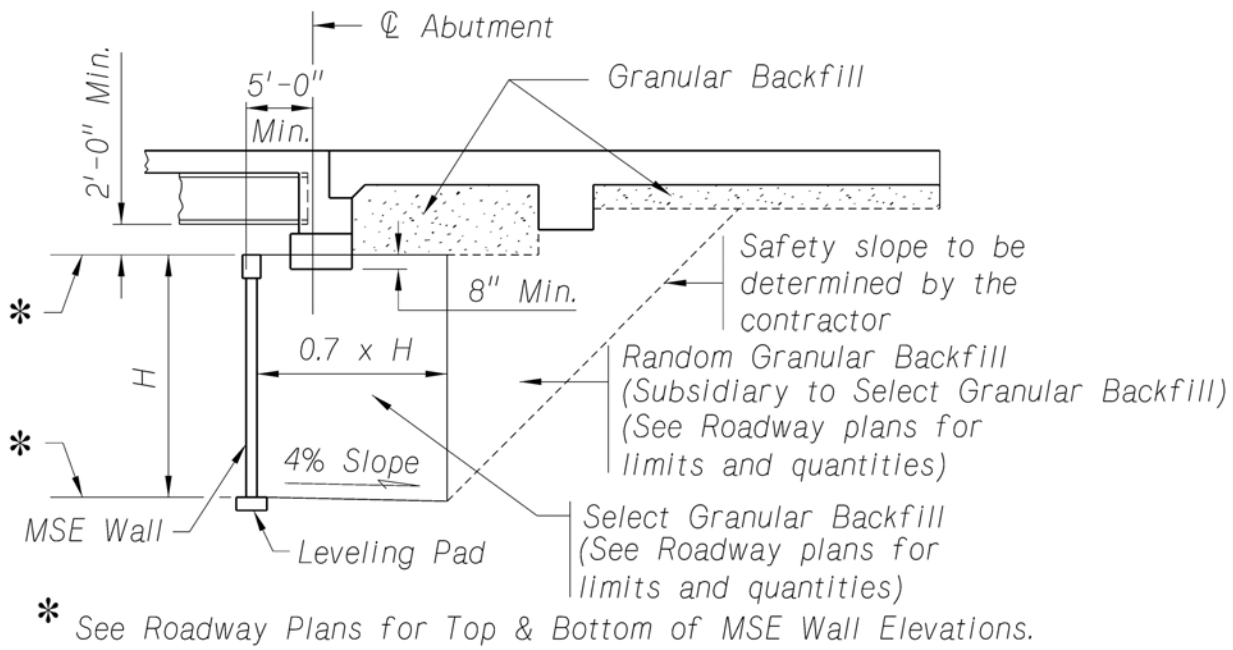

Wing Layout

MSE walls should not normally be used as an abutment wing. However, when this is required by Roadway Design, the following items must be indicated in the Bridge Plans.

- Wall layout required for abutment design.
- Wall Elevations.
- Details showing the top of wall and the bottom of the approach slabs.

Concrete Rail and Barriers

All concrete rails should be designed to prevent runoff water from spilling or penetrating behind the MSE walls. Therefore, concrete rail on the approach sections must be closed and extend along the paving sections. In addition, the gap over the grade beam and the gap at the end-of-floor must be sealed.

Grade Beam Piling

When the grade beam piling is closer than (0.9 times the MSE wall height) from the CL MSE wall, Designers must lay out grade beam piles directly behind abutment piles. This means if you drew a line perpendicular from the CL abutment passing through the abutment piles, the grade beam piles would also fall on this line.

Roadway Guidelines

The following pages contain a reproduction of the list of steps used by the Roadway Designer for retaining wall design. This has been provided in the BOPP Manual for the Bridge Designer to understand the Bridge Division's role in the design process. The statements below are to clarify steps in the guidelines.

Conventional Walls

Step 6 indicates, "If a conventional wall was selected, the Bridge Division shall design the wall and submit the special plan and associated Special Provisions to the Roadway Designer." These conventional walls will be provided by the Special Projects Section of the Bridge Division.

Shop Plan Review

Step 11 indicates, "The Bridge Division shall review the geometric aspects of the wall as they pertain to the bridge." The Bridge Designer will review the elevations, stations, and dimensions shown on the Geology Sheet.

2.2.11 - NDOR Retaining Wall Design Guidelines

From Conception through Shop Plan Review

Revised February 2, 2001

Step 1: Identify the need for a retaining wall during Activity 202 – Engineering Review.

Step 2: Project Development requests Preliminary Foundation Report – Activity 603 from Material and Research Geotechnical Section.

Step 3: Confirm the need during Activity 307 – Preliminary Roadway Design and order Final Foundation Report – Activity 604.

Step 4: The Final Foundation Report shall be submitted to the Roadway Designer and Bridge Division.

Step 5: The Roadway Designer shall schedule a meeting with M&R Geotechnical Section and Bridge Division in order to select the appropriate wall type (i.e., MSE Panel; MSE Block; or conventional Cast-in-Place wall). Prior to the meeting, the Roadway Designer should have compiled all relative information, such as, wall length, height, surcharge loading and other factors relative to the wall construction.

Step 6: If an MSE Panel or Block wall was selected, the Roadway Designer shall design the wall's general characteristics to be incorporated into the Bid Plans, along with the appropriate generic Special Provision. The Approved Wall Vendors are listed in the Approved Products List. As a minimum, the wall plan should include:

a. All wall geometrics – length, height, stationing, offsets, leveling pad elevations, etc.

b. Traffic data

c. Construction sequencing, if applicable

d. Surcharge loading (due to traffic or embankment)

e. Architectural notes

f. The calculated "Established Quantities"

1. Concrete Face Panels (SF), or

   Wall Materials (SF) (for Modular Block Walls)

2. Concrete Leveling Pad (LF), or
   Compacted Earth Leveling Pad (LF) (for Modular Block Walls)

3. Coping (LF) (if applicable)

4. Select Granular Backfill for Mechanically Stabilized Earth Structure (CY)

5. 18" Corrugated Metal Pipe (LF) (if applicable)

6. If the MSE wall is used at bridge abutments and the wall is built in two phases, then add the item; Shoring for Mechanically Stabilized Earth Structure (LS)

g. All the “External Site Factors” per the “Design Requirements” section of the generic Special Provision. These factors should be found in M&R Geotechnical Section Final Foundation Report.

h. Ensure that the following note is placed on the plan near the “External Site Factors”; The Contractor, in conjunction with the MSE Wall vendor, shall determine the wet unit weight of the select granular backfill material used in the reinforced soil zone. The unit weight shall be shown on the wall shop plans.

i. Utilities

j. On metric plans, list MSE Wall vendors per the “Approved Products List” (Terry Masters, Ext. 4754).

If the MSE wall is to be used at a bridge location, submit MSE Wall Special Plan to Bridge Division for review.

If a conventional wall was selected, the Bridge Division shall design the wall and submit the special plan and associated Special Provisions to the Roadway Designer.

Step 7: Advertise Project

Step 8: Bidding Contractors shall send MSE Wall Plans and Special Provisions to the Approved Wall vendors (listed in the Special Provisions or the Approved Products List) in order to secure bids.

Step 9: The awarded Contractor submits six sets of shop plans and working drawings (stamped by a Nebraska P.E.) to the Construction Division (Jason Volz, Ext. 4452). The Construction Division shall place a **Reviewed** stamp on the first sheet of all six sets (similar to the one shown below).

Reviewed by: <u>Roadway Design</u>
<u>M&R Geotechnical Section</u>
<u>Bridge</u>
<u>Construction</u>

Construction Division will then forward all six sets to M&R Geotechnical Section.

Step 10: The M&R Geotechnical Section to review the “External Stability” of the wall. After M&R Geotechnical Section sign and date the review stamp on all six sets, they will forward all six sets to Bridge Division.

Step 11: The Bridge Division shall review the geometric aspects of the wall as they pertain to the Bridge. Again marking corrections, deletions and concerns in red, on all six sets. After Bridge signs and dates the review stamp on all six sets, they will forward all sets to Roadway Design.

Step 12: The Roadway Designer shall review the submitted plans for the wall geometrics and to ensure that the plans reflect the Bid Plans. Corrections, deletions, or concerns should be marked in red on all six sets. Sign and date the Reviewed stamp. They shall keep one set, forward one set to M&R Geotechnical Section and four sets to Construction.

Step 13: The Construction Division will then distribute one set to the District Office, and the remaining three sets to the Contractor.

2.2.12 – Coordinate Guidelines

Coordinates shall be added to all State System Bridge Plans. Coordinates shall include the ‘x’ and ‘y’ coordinates and the corresponding station / offset. Survey datum information must be provided as well as any horizontal curve information.

Coordinates shall be provided for the following locations:

Corners and Centerline (or Profile Grade Line) for the beginning and ending of the approaches.

Points where the slab width changes. Edge of slab coordinates shall be provided corresponding to shim shot locations for curved bridges.

Centerline and edge of all substructures.

Control bolt locations.

Centerline of wings where they intersect the abutments and grade beams.

Phase joints and the centerline of substructures.

Centerline of roadway at End of Floor.

Coordinates shall be made available upon request for the following locations:

Piling.

Center of bearings.

Anchor Bolt locations.

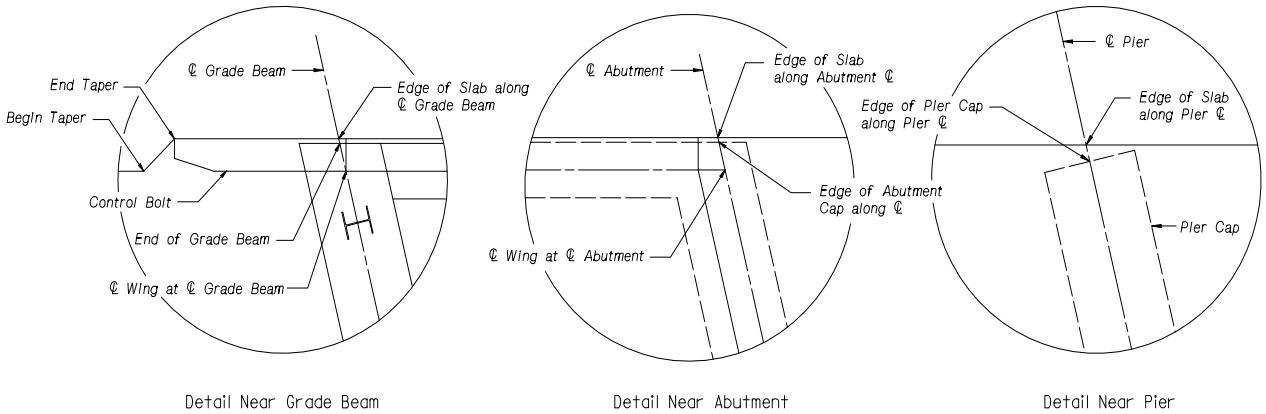

2.2.13 - Concrete Coating

Determination

All overhead structures on 6 lane I-80 and the I-480 / US 75 Interchange shall receive concrete coating. Other significant and / or highly visible structures can be considered on a project by project basis.

SECTION 2.3: STANDARD NOTES

2.3.1 - General Notes

001 This structure is designed in accordance with the AASHTO LRFD Bridge Design Specifications, Seventh Edition, including subsequent interim revisions.

002 The concrete bridge deck is designed by the empirical design method.

003 The superstructure is designed for the allowance of stay-in-place forms (5 lb./ft^2) between girders.

004 The girders and substructure are designed for a future wearing surface of 20 psf.

005 The Contractor may substitute any one of the alternate designs shown on the plans for the original design. All quantities are based on the original design and no additions or deductions will be allowed for the use of an alternate design.

006 All dimensions shown are in horizontal plane only. No allowances have been made for vertical curve or roadway cross slope.

007 The existing structure was built under project _____, dated __/__/__. Plans are available from the Bridge Division upon request.

008 The **(Utility Company)** shall furnish all PVC sleeves, conduit, inserts, and hardware required for the utility attachment to the bridge. All material to be installed by the Bridge Contractor shall be delivered to the bridge site by the utility company within 72 hours after notification from the Bridge Contractor. The contact person for the **(Utility Company)** Is Mr. XXXXX and can be reached at (XXX) XXX-XXXX.

009 The Contractor shall install the sleeves and inserts as shown on the plans. The Contractor shall install the conduit from the face of the abutment to the toe of the slopes under the approach slabs but will not be required to install the hangers and conduit between abutments. The installation by the Bridge Contractor will not be paid for directly but shall be subsidiary to the Pay Item, “Class 47BD-4000 Concrete for Bridge”.

010 Girder shims that will be provided to the Contractor account for the dead load deflection due to weight of the slab, rail or barrier, and median (if present) only. The Contractor is responsible for making the necessary adjustments for the particular forming system used to achieve the slab grades and elevations shown on the plans.

011 The Pay Item, “Excavation (Established Quantity)” shall include the channel excavation/fill through the bridge as shown on the plans.

012 The Pay Item, “Earthwork Measured in Embankment” shall include the channel excavation/fill through the bridge as shown on the plans.

013 Top soil shall be placed on riprap as shown in the riprap details.

014 The finishing machine shall be supported by the girders of the phase that is being poured. When closure pours are requirred, the bridge finishing machine shall be supported on the completed Phase I and Phase II slabs, straddling the closure pour opening to pour the Phase III concrete.

015 Shop plans required for review (Designers shall only list those that apply).

Steel Superstructure

Prestressed Concrete Superstructure

Superstructure Steel (Diaphragms / Separators / Etc.)

Substructure Steel (Armor Angles / Tie Rods / Etc.)

Steel Sheet Piling

Bearing Devices

Roadway Joints

Floor Drains

Pedestrian Barrier Rail

Pedestrian Railing (Chain Link Type)

016 Shop plans required for record (Designers shall only list those that apply)

Stay-In-Place forms

Bridge Shoring

Temporary Bridge Shoring

Temporary Supports

017 Unless noted as “Optional” all construction joints shown are mandatory.

018 Any excavation required for Rock Riprap, Type “X” below the new channel cross section shall be subsidiary to the Pay Item “Rock Riprap, Type “X””.

2.3.2 – Rolled Beam Girder Bridge Notes

Grade 36

101 All structural steel shall conform to the requirements of ASTM A709/A709M, Grade 36.

102 All other structural steel shall conform to the requirements of ASTM A709/A709M, Grade 36.

Grade 50

111 All structural steel for rolled beams and all splice material shall conform to the requirements of ASTM A709/A709M, Grade 50.

Weathering Steel

121 All structural steel for rolled beams, stiffeners, separators and all splice material shall conform to the requirements of ASTM A709/A709M, Grade 50W weathering steel.

122 Nuts, bolts, and washers used in the assembly of weathering steel shall be Type 3.

Fabrication

131 All bearing stiffeners and girder ends, except at field splices, shall be vertical after final erection. All other stiffeners and all field splices shall be normal to the top flange.

132 During girder fabrication, the flanges at the splice must line up within 1/8” of parallel to the adjacent flanges without applying external force, before the splice is drilled.

134 All rolled beams and splice plates shall be considered main tension members for the purpose of Charpy-V-Notch tests.

135 All rolled beams shall be placed with mill camber upwards.

137 The Contractor may eliminate any bolted field splice by extending the heavier of the beams so connected. The Contractor shall make all necessary adjustments in bearings and bearing seat elevations caused by these changes. These changes and a revised blocking diagram shall be shown on the shop plans and will be subject to approval by the Engineer. No change in contract price or quantities will be made for this change.

Field Assembly

151 All fasteners shall be 7/8” Φ high strength bolts, ASTM A325.

152 Field tack welding of form hangers or miscellaneous hardware to any part of the steel girder, with the exception of the shear connectors, shall be prohibited.

153 When assembling the girders, they shall be set according to the blocking diagram before any bolts are tightened to a snug-tight condition.

154 Field splices shall be clean and free of all foreign matter before field assembly. The plates shall be in full contact when the bolts are tightened to a snug-tight condition.

155 The girders for this bridge are not designed to resist any torsional or lateral forces due to temporary construction loads. The Contractor must provide any temporary bracing necessary to support the girder web and flanges against all torsional or lateral forces resulting from construction loads.

156 The shim shots may be taken before or after the turndowns and diaphragms are poured.

157 7/8” Φ x 0’ – 5” end welded stud shear connectors have an in-place weight of 98.0 lb. / 100 studs.

158 Steel (weight) quantities are based upon 490 pcf and 1 lb. per bolt.

2.3.3 – Welded Plate Girder Notes

Grade 36

101 All structural steel shall conform to the requirements of ASTM A709/A709M, Grade 36.

102 All other structural steel shall conform to the requirements of ASTM A709/A709M, Grade 36.

Grade 50

211 All structural steel for girder flanges, webs and all splice material, shall conform to the requirements of ASTM A709/A709M, Grade 50.

Weathering Steel

221 All structural steel for girder flanges, webs, stiffeners, separators, and all splice materials, shall conform to the requirements of ASTM A709/A709M, Grade 50W weathering steel.

122 Nuts, bolts, and washers used in the assembly of weathering steel shall be Type 3.

High Performance Steel 70W

225 All structural steel for girder flanges, webs, and all splice materials, shall conform to the requirements of ASTM A709/A709M, Grade 70W High Performance Steel.

226 All other structural steel shall conform to the requirements of ASTM A709/A709M, Grade 50W.

Fabrication

231 As an alternate design, all intermediate stiffener plates may be omitted if _____" web plates are used in place of _____" web plates shown.

232 Butt splices will be permitted for flange plates exceeding 60 feet in length. The locations of the splice shall be shown on the shop plans and will be subject to approval by the Engineer.

233 The Contractor may eliminate any butt welded flange splice by extending the heavier of the two plates so connected. The Contractor shall make any necessary adjustments in bearings and bearing seat elevations caused by flange plate changes. This shall be shown on shop plans and will be subject to approval by the Engineer. No change in contract price or quantites will be made for this substitution.

234 Butt splices will be permitted for web plates exceeding 60 feet in length. The location of the splice shall be shown on the shop plans and will be subject to approval by the Engineer.

235 During girder fabrication, the final camber tolerance shall not exceed those in Table 3.3 of A.W.S. "S" is the length of girder between splices.

236 When the entire slab is not expected to be placed in one day, the Contractor may submit an alternate proposed slab pouring sequence to the Bridge Division at the preconstruction conference so that new camber and shims may be calculated.

131 All bearing stiffeners and girder ends, except at field splices, shall be vertical after final erection. All other stiffeners and all field splices shall be normal to the top flange.

132 During girder fabrication, the flanges at the splice must line up within 1/8" of parallel to the adjacent flanges without applying external force, before the splice is drilled.

136 Intermediate stiffener plates shall alternate on both sides of the web, at intervals shown, for interior girders. At exterior girders, intermediate stiffeners shall be placed only on the inside of the web plate.

Field Assembly

151 All fasteners shall be 7/8" Φ high strength bolts, ASTM A325.

152 Field tack welding of form hangers or miscellaneous hardware to any part of the steel girder, with the exception of the shear connectors, shall be prohibited.

153 When assembling the girders, they shall be set according to the blocking diagram before any bolts are tightened to a snug-tight condition.

154 Field splices shall be clean and free of all foreign matter before field assembly. The plates shall be in full contact when the bolts are tightened to a snug-tight condition.

155 The girders for this bridge are not designed to resist any torsional or lateral forces due to temporary construction loads. The Contractor must provide any temporary bracing necessary to support the girder web and flanges against all torsional or lateral forces resulting from construction loads.

156 The shim shots may be taken before or after the turndowns and diaphragms are poured.

157 7/8" Φ x 0' – 5" end welded stud shear connectors have an in-place weight of 98.0 lb. / 100 studs.

158 Steel (weight) quantities are based upon 490 pcf and 1 lb. per bolt.

Steel Girder Repair

400 Girder Repair shall consist of straightening flanges, webs and cross-frames to within ½" of their original position. Straightening may be done by heating, mechanical means, or a combination of both. Gouges shall be ground so that no sides are steeper than 10:1. Areas where the paint is damaged or gets damaged during the repair process shall be cleaned and repainted in accordance with the Nebraska Standard Specifications for Highway Construction using paint from the NDOR Approved Products List. The color of the finish coat shall be a near match to the existing color.

401 The Contractor shall follow the heat application procedures on sheet XX of XX.

402 District personnel and the Contractor shall inspect the existing bottom and top flange web welds to verify there is no damage to those welds. District personnel will contact the Bridge Division if any weld damage is noted.

403 Existing girders and stiffeners are Grade 50 steel. Existing cross-frames are Grade 36.

2.3.4 – Concrete Notes

3000 PSI

301 All other cast-in-place concrete shall be Class “47B” concrete, with a 28-day strength of 3,000 psi.

4000 PSI

311 Concrete for slab, approach slabs and rails shall be Class “47BD”, with a 28-day strength of 4,000 psi.

312 Concrete for slab, approach slabs, diaphragms, turndowns, and rails shall be Class “47BD”, with a 28-day strength of 4,000 psi.

313 Concrete for slab, approach slabs and concrete barriers shall be Class “47BD”, with a 28-day strength of 4,000 psi.

314 Concrete for slab, approach slabs, diaphragms, turndowns, and concrete barriers shall be Class “47BD”, with a 28-day strength of 4,000 psi.

Reinforcement

321 All reinforcing steel shall be epoxy coated and conform to the requirements of ASTM A615/A615M, Grade 60 steel.

322 The minimum clearance, measured from the face of the concrete to the surface of any reinforcing bar, shall be 3”, except where otherwise noted.

Prestress

331 The prestressed girders have been designed assuming 100% continuity at the interior supports for live load.

332 Prestressed concrete girders must be at least 9 days old before they can be set on the Bridge substructure. Surveying for shim shots, forming the bridge deck, turndowns, diaphragms, and placing construction material on the girders is not allowed until the girders have reached design strength and are at least 30 days old. The shim shots may be taken before or after the turndowns and diaphragms are poured. All girder lines and spans, between expansion joints, shall be set before the shims are calculated. Shim shots are valid for 60 days. If the deck is not placed within 60 days, shim shots must be retaken, shims may be adjusted, and all costs shall be subsidiary to the Pay Item, “Class 47BD-4000 Concrete for Bridge”.

333 The Contractor must provide any temporary intermediate diaphragms and/or bracing necessary to provide lateral and torsional stability for the girders during construction of the concrete slab. The temporary intermediate diaphragms/bracing shall be removed after the concrete slab has attained 75% of its design strength. The cost for furnishing, installing, and removing the temporary intermediate diaphragms and/or bracing shall be subsidiary to the Pay Item, “Class 47BD-4000 Concrete for Bridge”.

Post-Tensioning

335 The post-tensioned girders have been designed assuming 100% continuity at the interior supports for deck dead load, superimposed dead loads and live loads.

336 Post-tensioned concrete girders must be at least 9 days old before they can be set on the bridge substructure. Post-tensioning of the girders is not allowed before they attain the required design concrete strength. Surveying for shim shots, forming bridge deck, turndowns, or diaphragms and placing construction material on the girder is not allowed before post-tensioning completion.

337 The Contractor must provide any temporary intermediate diaphragms and/or bracing necessary to provide lateral and torsional stability for the girders during post-tensioning and construction of the concrete slab. The temporary intermediate diaphragms/bracing shall be removed after the concrete slab has attained 75% of its design strength. The cost for furnishing, installing, and removing the temporary intermediate diaphragms shall be subsidiary to the Pay Item, “Class 47BD-4000 Concrete for Bridge”.

Integral Abutments

341 No form work, reinforcing steel, or construction loads shall be placed on the girders (concrete girders need to be 30 days and have reached their design strength) until the abutment concrete has set for 72 hours or reached a minimum compressive strength of 2,000 psi.

Concrete Rehabilitation and Repair

350 All existing concrete surfaces to be in contact with the new construction shall be thoroughly roughened and cleaned before placing any new concrete.

351 Field bend and/or clip reinforcing bars to maintain minimum clearance. Epoxy coat clipped ends.

352 Chamfer all exposed edges of concrete.

353 The Contractor shall place a 1” deep saw cut at the limits of the removal to facilitate a clean, smooth line when breaking back existing concrete.

354 When breaking existing concrete, the use of a 15 lb. maximum hammer applied at a 45° angle is required to chip along the edges of removal, and a 30 lb. maximum hammer applied at a 45° angle is required for all other concrete removal.

355 “Class II Repair” and “Class III Repair” shall consist of removing broken, loose or unsound concrete from the bridge deck at the locations designated by the Engineer. “Class II Repair” shall be from the top of the concrete deck to the midpoint and “Class III Repair” shall be from the midpoint to the bottom of the deck. All exposed reinforcing steel shall be sandblaster clean.

356 When breaking existing concrete and existing reinforcing steel is encountered that is broken or has section loss due to corrosion greater than 20%, the Contractor shall lap the existing bar with a new epoxy coated bar of the same size a minimum of 2’.

357 An approved Bonding Agent shall be used prior to placing new concrete against any existing concrete.

358 Concrete placed during expansion joint repairs shall be allowed to cure at least 28 days prior to applying the Multi-Layer Epoxy Polymer Overlay.

359 Actual field conditions may require more or less repair than what is depicted in the plans. The final areas to be repaired shall be determined by the Engineer. The Bridge Office shall be notified when the field conditions impede the implementation of these plans or vary significantly from what is shown.

360 Existing unbroken concrete surfaces to be in contact with the new concrete shall be scarified as shown in Detail X on sheet XX of XX.

361 The minimum clearance, measured from the face of the concrete to the surface of any reinforcing bar, shall be 2”, except where otherwise noted.

362 All reinforcing steel shall conform to the requirements of ASTM A615/A615M, Grade 60 steel.

2.3.5 – Structural Steel Notes

Payment

410 The Pay Item, “Structural Steel for Substructure”, shall include the tie rods and nose angles at the piers.

Material Specifications

411 Tie rods shall conform to ASTM A709/A709M Grade 36 Steel. Turnbuckles shall conform to ASTM A668/A668M, Class C.

412 After fabrication, nose angles at the piers shall be galvanized according to ASTM A123/A123M.

413 Structural steel for all “H” piles shall conform to ASTM A 709/A 709M, Grade 36.

414 After fabrication, tie rods, turnbuckles, and all other hardware shall be galvanized according to ASTM A123/A123M.

101 All structural steel shall conform to the requirements of ASTM A709/A709M, Grade 36.

2.3.6 – Geology Sheet Notes

General

501 All pile spacing are given at the bottom of concrete.

502 Piers/Bents are designed for scour to elevation --------- ft. for 100-Year Flood
Piers/Bents are checked for scour to elevation ---------- ft. for 500-Year Flood

503 Abutment piling followed with the letter “B” shall be battered at X: 12.

504 Pier/Bent piling followed by the letter “B” shall be battered at X: 12.

505 Prefabricated cast steel points will be required on all HP piles in this structure. They shall conform to the requirements of ASTM A27 Grade 70-36 or ASTM A148 Grade 90-60 and be listed on the NDOR Approved Products List.

Sheet Piles

521 As a minimum, all steel sheet piling shall conform to ASTM A328/A328M steel and shall meet the following requirements:

Section Length ..... ft.
Maximum Section Depth ..... in.
Minimum Section Thickness ..... 0.3125 in.
Elastic Section Modulus ..... $in^3/ft.$

The Contractor shall submit for review a shop plan of the sheet pile layout showing all pertinent dimensions, details, and section properties.

The pay quantity will be based on the sheet pile wall dimensions shown. The constructed wall length will be within +/- 2’ – 0” of the sheet pile wall dimensions shown.

Bearing Piles

531 Concrete piling shall be prestressed concrete piles, Type I.

533 As an alternate, cast-in-place concrete piles may be used provided that the Contractor shall be responsible for furnishing piling of sufficient length to obtain the penetration and bearing value required by the Geotechnical Engineer. All concrete for cast-in-place concrete piles shall be Class 47B with a minimum 28-day compressive strength of 3,000 psi and 6” to 8” slump, the slump will be increased by adding plasticizer.

534 All concrete for prestressed concrete bearing piles shall have a minimum 28-day compressive strength of 5,000 psi.

535 All exposed pipe piles shall be filled with concrete. This concrete shall be Class “47B” with a minimum 28-day compressive strength of 3,000 psi. This concrete shall be subsidiary to the Pay Item, “Pipe Piling”.

Hammers

541 The borings, as logged on the plans, represent the character of the subsoil at the location indicated. No guarantee is made that the subsoil conditions vary uniformly between or outside the given location.

542 Figures beside the column of borings indicate the number of blows required to drive a standard penetrometer, of 2” O.D., the second and third 6 inches using a 140 lb. weight falling 30 inches, in accordance with ASTM D1586 procedures.

Integral Abutments

550 All abutment piles, excluding wing pile, shall be started in holes predrilled to elevation _____. The minimum diameter of the holes for the HP___X___ pile shall be ____ in.

Piles shall be placed in the drilled holes, driven to design bearing and the void between the hole wall and the pile shall be backfilled with dry, clean sand. Predrilled holes shall not be backfilled until all abutment and wing piles are driven. Drilling, disposal of removed soil, and providing and backfilling with sand will be considered subsidiary to payment for steel piling.

Drilled Shafts

560 Pier columns will be supported on _____ diameter drilled shafts.

561 The drilled shafts shall be constructed using permanent casing. Permanent casing cutoff elevations are shown on the plans.

562 A construction joint shall be placed at the top of the permanent casing.

563 It is the responsibility of the Contractor to verify the existing elevations and have a drilled shaft installation plan submitted and approved by the Geotechnical Engineer. Any proposed changes in the drilled shaft construction shall be included in the plan.

564 Concrete for drilled shafts shall be Class 47B with 28-day strength of 3,000 psi.

565 All reinforcing steel in the drilled shafts shall be uncoated and conform to the requirements of ASTM A615/A615M.

566 The Geotechnical Section of the Materials and Research Division shall be notified prior to the excavation of the first drilled shaft.

567 The Contractor shall perform the sonic testing on the first drilled shaft and provide to the Geotechnical Engineer the results of the test prior to constructing additional drilled shafts.

Test Piles

570 Pile order lengths (with the exception of those shown for the test piles) are tentative. The final order lengths shall be based on the results obtained from the test pile driving. The driving of the test pile will be monitored with a Pile Driving Analyzer. Final order lengths will be provided by the Engineer to the Contractor within three (3) working days after the test pile driving is complete.

571 Test piles will be driven, as shown in the TEST PILE DATA table.

572 At the Engineer's option, additional piling may be monitored with the Pile Driving Analyzer.

573 The use of the Pile Driving Analyzer will require the Contractor to set up the hammer for driving. The Contractor shall bolt two accelerometers and two strain transducers to the pile before driving is started. The holes or anchors for the accelerometers and strain transducers will have been predrilled by Department personnel while the pile is still on the ground. The Contractor may be required to stop the hammer for wave speed determination after the first few blows.

574 The Contractor shall drive the pile until the transducers are near the surface of the ground, or as directed by the Engineer, at which time the Contractor shall stop the hammer for the removal of the accelerometers and strain transducers. The Contractor shall continue driving the pile to cut-off or as directed by the Engineer.

575 The time delay in driving each pile being monitored by the Pile Driving Analyzer will normally range from 30 to 60 minutes. The Contractor shall provide access to the pile driving area for the Engineer's equipment vehicle (light truck). The work performed by the Contractor, in conjunction with the use of the Pile Driving Analyzer, as described herein, shall not be paid for directly, but shall be considered subsidiary to items for which direct payment is made.

2.3.7 – Miscellaneous Notes

Abutment Drainage

601 All plastic pipe, galvanized wire screen, and miscellaneous drainage items at the abutments shall be considered subsidiary to the Pay Item, “Subsurface Drainage Matting”.

602 Drainage matting shall wrap around the sloping drain pipe and extend 3 ft. along the wings.

Bridge Widening

621 All existing concrete coming in contact with the new work shall be thoroughly cleaned and roughened before placing new concrete.

622 All reinforcing steel encountered in breaking back existing concrete shall be thoroughly cleaned, straightened and extended into the new work a minimum of 2’.

Elastomeric Bearings

631 Elastomeric bearing pads shall be AASHTO LRFD Bridge Construction Specifications Grade 3 or higher and have a hardness (Shore A durometer) of 60.

632 Elastomeric bearing pads, furnished and installed, shall be measured for payment by the each. Payment shall be for the Pay Item, “Elastomeric Bearing”.

Mechanically Stabilized Earth (MSE) Walls

640 **MSE Wall Piling Notes:**

Abutment and grade beam piling may be driven before or after the construction of the MSE walls. If the piling are to be driven before the construction of the MSE wall, the Contractor shall place Corrugated Metal Pipe (CMP) sleeves around each pile prior to constructing the wall. If the piles are to be driven after the construction of the MSE wall, the Contractor shall place CMP sleeves at the exact location of each pile so that after the completion of the MSE wall the Contractor can drive the piles through the sleeves. The CMP sleeves shall be maintained in a plumb position during construction of the MSE wall. Furnishing and placing of the CMP sleeves shall be included as part of the work for the MSE wall.

After all piling for the abutment and grade beam are driven and the MSE wall is complete, the Contractor shall fill the space between the piling and the CMP sleeves with dry, clean sand. Backfilling with sand shall be considered subsidiary to Pay Item “HP ___ INCH x ___ LB Steel Piling.

Railroad

660 The top of rail elevations shall be verified in the field before beginning construction of the bridge. If the rail elevations are not as shown on the plans, the Project Manager shall contact the Bridge Division.

SBS Modified Base Sheet

670 SBS Modified Asphalt Base Sheet shall be modified bitumen roofing material, with a minimum thickness of 0.090 inches and a minimum weight of 60 lb. per 100 square feet.

Bridge Rehabilitation and Repair

700 The Pay Item “… “, has been given a quantity of 1. XX to establish a set price per XX. This shall be paid for by the contract unit price per XX (XX). Such payment is full compensation for all materials, equipment, tools, labor, and incidentals necessary to complete the work.

701 The locations of all aerial and underground utility facilities may not be indicated in these plans. Underground utilities, whether indicated or not will be located and flagged by the utilities at the request of the Contractor.

No excavation will be permitted in the area of underground facilities until all such facilities have been located and identified to the satisfaction of all parties. The excavation must be accomplished with extreme care in order to avoid any possibility of damage to the utilities facility.

702 Before ordering any materials, the Contractor shall make a detailed field inspection of the structure, verifying all dimensions and reporting to the Engineer any discrepancies between the field measurements and those shown on the plans.

703 All materials removed shall become the property of the Contractor and shall be removed from the project site.

704 All materials, equipment, tools, labor, and incidentals necessary to complete the work, not paid for directly, shall be considered subsidiary to other items for which payment is made.

705 Damage to existing structures, consequent to the Contractor's operations, shall be repaired at the Contractor's expense, under the direction of the Engineer.

706 The State does not guarantee that these repair plans or the As-Built Plans depict the actual site conditions and shall not be liable for any discrepancies.

707 Dimensions, stations and elevations shown are obtained from the As-Built Plans. Elevations may need to be adjusted to meet the current datum. The Engineer shall establish control points from the existing structure as needed.

708 The Contractor shall take all necessary precautions, during construction, to prevent debris from falling in the channel.

709 Match existing grade profile.

710 The Contractor shall coordinate Traffic Control with the District X Engineer before start of work.

711 Details, quantities or information for all Group 9 items contained in these bridge plans are for use "BY OTHERS".

712 The Contractor shall not be allowed to have heavy machinery or equipment under the bridge or below the grade elevation. Only small hand operated, hand transported equipment or hand tools shall be allowed. In no event shall methods or equipment be used that will cause displacement of the soil. Power operated hand tools that cause no disturbance of the soil will be allowed.

713 Examples of products that can be used for XXXX (type of repair) are XXXXX, XXXXXX or other products that are designed for the same purpose and are of similar configuration. Data sheets for products being considered shall be provided to the Engineer for review prior to ordering materials. Products not deemed suitable by the Engineer, will not be allowed. The requirements of Section 1001 of the Standard Specifications for Highway Construction must be met.

714 The Contractor will be allowed to place temporary scaffolding to complete the construction under the deck. All scaffolding shall be removed in its entirety upon completion of the work.

715 The Pay Item, “PAINTING STRUCTURE AT STATION XXX+XX.XX”, shall include the painting of XXX at XXXX (location) as shown on sheet Y of YY.

716 The Pay Item, “PAINTING ….”, shall include the painting of the bearings at the …. (location).

2.3.8 – Pay Item Policy

General

Designers are responsible for incorporating the Bridge Quantities under the proper Pay Items. Designers shall employ the Bridge Quantity Tolderance Policy (see 2.1.6) when calculating Bridge Quantities. Commonly used standard Pay Items are available as CAD cells and listed herein for your convenience. A complete listing of all Pay Items can be obtained from PS&E, through CMS mainframe or NDOR website under Doing Business and Contractor's Corner.

CMS Pay Item Database

There is a Standard English or Metric item file listing available on NDOR CMS mainframe. You can search these files for the current English or Metric standard items. It contains the Standard Item Number, Unit of Measure, Specification Reference (if shown) and Description.

Type the following at a CMS prompt: 07stdit xxxxx for English 2007 Spec.

The word, words, partial word, or numbers you wish to search for are represented by xxxxx. You may use upper or lower case or a combination. Spaces and punctuation must also be taken into consideration. Remember, you are searching for a string of letters and/or numbers.

When you enter your search criteria, it will list all the items that meet this requirement. **Caution!** If you use too general a term, you may get a long listing. A long list of items may not fit onto one screen. If this occurs, you will notice the message "Holding" in the lower right of your screen. As with other CMS applications, use your PA2 key to continue.

This file shall be updated on Friday afternoons with all the new standard items. Contact the Section Leader if the standard item you need does not appear on this listing.

Structure Removal

The Pay Item, **"Remove Structure at Station _____"** (EA) shall not be shown in the Bridge Plans. However, this Pay Item must always be included in the Estimate of Quantities submitted by the Assistant Bridge Engineer. Payment for this item shall be included in the (Roadway) Summary of Quantities Sheet. The Bridge Division does not consider this to be a part of the Bridge Plan, and it may or may not be a part of Group 6 work in the Contract. This Pay Item is in the NDOR Standard Specifications, Section 203 (Removal of Structures and Obstructions).

Preparation of Bridge

Payment for **"Preparation of Bridge at Station _____"** (EA) is described in the NDOR Standard Specifications, Section 704.

STANDARD PAY ITEMS

NOTE	CATEGORY		UNIT OF MEASURE	ITEM NUMBER
	EXCAVATION & MISCELLANEOUS			
001	EXCAVATION (ESTABLISHED QUANTITY)		CY	1010.01
002	EARTHWORK MEASURED IN EMBANKMENT		CY	1030.00
003	RIPRAP FILTER FABRIC		SY	1043.50
004	INTERLOCKING CONCRETE PAVER BLOCK		SF	3017.50
	APPROACH ITEMS			
010	CONCRETE FOR PAVEMENT APPROACHES CLASS 47BD-4000		CY	3050.15
	SLABS	CY		
	CONCRETE RAILS	CY		
010B	CONCRETE FOR PAVEMENT APPROACHES CLASS 47BD-4000		CY	3050.15
	SLABS	CY		
	CONCRETE BARRIERS	CY		
011	EPOXY COATED REINFORCING STEEL FOR PAVEMENT APPROACHES		LB	3051.10
	SLABS	LB		
	CONCRETE RAILS	LB		
011B	EPOXY COATED REINFORCING STEEL FOR PAVEMENT APPROACHES		LB	3051.10
	SLABS	LB		
	CONCRETE BARRIERS	LB		
	EXCAVATION			
020	ABUTMENT NO. 1 EXCAVATION		LS	6000.10
	ABUTMENT NO. 2 EXCAVATION		LS	6000.11
021	PIER NO. 1 EXCAVATION	(USED FOR DRY EXC.)	LS	6000.20
	PIER NO. 2 EXCAVATION		LS	6000.21
	PIER NO. 12 EXCAVATION		LS	6000.31
	PIER NO. 1 EXCAVATION	(USED FOR WET EXC.)	LS	6000.60
	PIER NO. 2 EXCAVATION		LS	6000.61
	PIER NO. 15 EXCAVATION		LS	6000.74
022	BENT NO. 1 EXCAVATION	(USED FOR DRY EXC.)	LS	6001.00
	BENT NO. 2 EXCAVATION		LS	6001.01
	BENT NO. 1 EXCAVATION	(USED FOR WET EXC.)	LS	6001.50
	BENT NO. 2 EXCAVATION		LS	6001.51
	BENT NO. 3 EXCAVATION		LS	6001.52
	BENT NO. 4 EXCAVATION		LS	6001.53

STANDARD PAY ITEMS

NOTE	CATEGORY	UNIT OF MEASURE	ITEM NUMBER
	EXPANSION JOINTS		
029	BRIDGE JOINT NOSING	CF	6004.48
030	EXPANSION JOINT	LF	6004.50
031	EXPANSION JOINT REPAIR	LF	6004.60
032	DECK JOINT SEAL, TYPE IV	LF	6005.13
033	PREFORMED SILICONE JOINT, TYPE B	LF	6005.28
034	PREFORMED SILICONE JOINT, TYPE A	LF	6005.31
035	PREFORMED EXPANSION JOINT, TYPE A	LF	6005.32
036	PREFORMED EXPANSION JOINT, TYPE B	LF	6005.33
037	SILICONE JOINT SEALER	LF	6005.34
038	PRECOMPRESSED POLYURETHANE FOAM JOINT, TYPE A	LF	6005.36
039	PRECOMPRESSED POLYURETHANE FOAM JOINT, TYPE B	LF	6005.37
	BEARINGS		
040	ELASTOMERIC BEARING	EA	6005.60
041	EXPANSION BEARING, PTFE TYPE	EA	6005.65
042	FIXED BEARING DEVICE, TYPE I	EA	6005.80
043	FIXED BEARING	EA	6005.83
044	GUIDED BEARING DEVICE, TYPE II	EA	6005.85
045	NON-GUIDED BEARING DEVICE, TYPE III	EA	6005.90
	DECK FINISHING		
048	BRIDGE DECK GROOVING	SY	6006.56
	SILICA FUME OVERLAY		
050	CLASS I REPAIR	SY	6007.01
051	CLASS II REPAIR	SY	6007.02
052	CLASS III REPAIR	SY	6007.03
053	BRIDGE DECK REPAIR, PARTIAL DEPTH	SY	6007.22
054	BRIDGE DECK REPAIR, FULL DEPTH	SY	6007.23
055	PLACING, FINISHING, AND CURING CONCRETE OVERLAY – SF	SY	6008.40

STANDARD PAY ITEMS

NOTE	CATEGORY	UNIT OF MEASURE	ITEM NUMBER
	CONCRETE		
060	FLOWABLE FILL CONCRETE	CY	3089.80
061	CLASS 47B-HE-4000 CONCRETE FOR BRIDGE	CY	6009.94
062	CLASS 47B-3000 CONCRETE FOR BRIDGE	CY	6010.22
	ABUTMENTS	CY	
	PIERS	CY	
062B	CLASS 47B-3000 CONCRETE FOR BRIDGE	CY	6010.22
	ABUTMENTS CY		
	BENTS CY		
063	CLASS 47BD-4000 CONCRETE FOR BRIDGE	CY	6010.26
	SLAB CY		
	HAUNCHES CY		
	CONCRETE RAILS CY		
063B	CLASS 47BD-4000 CONCRETE FOR BRIDGE	CY	6010.26
	SLAB CY		
	HAUNCHES CY		
	CONCRETE BARRIERS CY		
064	CLASS 47BD-5000 CONCRETE FOR BRIDGE	CY	6010.28
065	PRECAST/PRESTRESSED CONCRETE SUPERSTRUCTURE AT STATION _____	LS	6011.11
	GIRDERS	CY	
066	PRECAST-PRESTRESSED/POST-TENSIONED CONCRETE SUPERSTRUCTURE AT STATION _____	LS	6011.12
	GIRDERS	CY	
068	CONCRETE FOR OVERLAYS – SF	CY	6016.02
069	MULTI-LAYER EPOXY POLYMER OVERLAY	SY	6016.20
	REINFORCING		
070	REINFORCING STEEL FOR BRIDGE	LB	6020.00
	PREPARATION		
080	PREPARATION OF BRIDGE AT STATION _____	EA	6030.00
	REMOVE STRUCTURE AT STATION	EA	6040.00
	CONTRACTOR'S CONSTRUCTION ACCESS		
085	ACCESS BRIDGE	LS	6052.51-.54
086	ACCESS CROSSING	LS	6052.55-.57
	PEDESTRIAN BRIDGE		
088	PEDESTRIAN BRIDGE	LS	6070.50

STANDARD PAY ITEMS

NOTE	CATEGORY	MEASURE	UNIT OF NUMBER	ITEM
	STRUCTURAL STEEL			
090	STEEL SUPERSTRUCTURE AT STATION _____		LS	*
	GIRDERS	LB		
	SEPARATORS & MISC.	LB		
	SHEAR CONNECTORS	LB		
	BOLTS	LB		
	TOTAL	LB		
	* (WELDED PLATE GIRDER)		LS	6071.11
	* (ROLLED BEAM)		LS	6071.12
	* (WELDED PLATE/ROLLED BEAM COMBINATION)		LS	6071.13
091	STRUCTURAL STEEL FOR SUBSTRUCTURE		LB	6080.00
092	STRUCTURAL STEEL FOR SUPERSTRUCTURE		LB	6081.00
093	STEEL DIAPHRAGM		EA	6095.00
	EXPANDED POLYSTYRENE GEOFOAM			
095	EXPANDED POLYSTYRENE GEOFOAM		CY	6094.90
	FLOOR DRAINS			
100	FLOOR DRAINS		EA	6100.00
	ROCK RIPRAP			
110	BROKEN CONCRETE RIPRAP		TON	6104.00
111	ROCK RIPRAP, TYPE A		TON	6105.01
112	ROCK RIPRAP, TYPE B		TON	6105.02
113	ROCK RIPRAP, TYPE C		TON	6105.03
114	SALVAGING AND PLACING TOPSOIL ON RIPRAP		SY	6105.30
115	REMOVE AND SALVAGE RIPRAP		CY	6106.26
	CONCRETE SLOPE PROTECTION			
120	CONCRETE SLOPE PROTECTION		SY	6107.00
128	PENTRATING CONCRETE SEALER		SF	6131.23
	REINFORCING STEEL			
130	EPOXY COATED REINFORCING STEEL		LB	6131.50
130B	EPOXY COATED REINFORCING STEEL		LB	6131.50
	SLAB	LB		
	CONCRETE RAILS	LB		
	ABUTMENTS	LB		
	PIERS	LB		

STANDARD PAY ITEMS

NOTE	CATEGORY		UNIT OF MEASURE	ITEM NUMBER
	REINFORCING STEEL, (CONTINUED)			
130C	EPOXY COATED REINFORCING STEEL		LB	6131.50
	SLAB	LB		
	CONCRETE BARRIERS	LB		
	ABUTMENTS	LB		
	PIERS	LB		
130D	EPOXY COATED REINFORCING STEEL		LB	6131.50
	SLAB	LB		
	CONCRETE RAILS	LB		
	ABUTMENTS	LB		
	BENTS	LB		
130E	EPOXY COATED REINFORCING STEEL		LB	6131.50
	SLAB	LB		
	CONCRETE BARRIERS	LB		
	ABUTMENTS	LB		
	BENTS	LB		
	MEMBRANES			
135	MEMBRANE WATERPROOFING		SY	6133.00
136	COLD LIQUID – APPLIED MEMBRANE WATERPROOFING		SY	6133.08
137	BUTYL OR EPDM MEMBRANE WATERPROOFING		SY	6133.09
	SUBSURFACE DRAINAGE MATTING			
140	SUBSURFACE DRAINAGE MATTING		SY	6139.50
	PILING & DRILLED SHAFTS			
145	CONCRETE PILING		LF	6200.00
146	HELICAL PILE		EA	6208.00
147	HP 12 INCH X 53 LB STEEL PILING		LF	6210.14
148	HP 14 INCH X 89 LB STEEL PILING		LF	6210.21
149	PIPE PILING		LF	6210.50
150	TEST PILE		EA	6251.00
			EA	6251.01
			EA	6251.02
			EA	6251.03
151	ROCK SOCKET		LF	6251.40
152	DRILLED SHAFT		LF	6251.50
153	CONCRETE SHEET PILING		SF	6300.00
154	STEEL SHEET PILING		SF	6310.00
155	VINYL SHEET PILING		SF	6322.00

STANDARD PAY ITEMS

NOTE	CATEGORY	UNIT OF MEASURE	ITEM NUMBER
	RAILING		
160	PEDESTRIAN BARRIER RAIL	LF	6401.00
161	PEDESTRIAN RAILING (CHAIN LINK TYPE)	LF	6404.00 6404.02
162	6’ PEDESTRIAN RAILING (CHAIN LINK TYPE)	LF	6404.16
163	7’ PEDESTRIAN RAILING (CHAIN LINK TYPE)	LF	6404.17
164	6’ PEDESTRIAN RAILING (CHAIN LINK TYPE-VINYL COATED)	LF	6404.26
	DRAINAGE		
170	DRAINAGE SYSTEM AT STATION _____	EA	6415.00
171	DECK DRAINAGE SYSTEM	LS	6415.26
	PAINTING		
180	PAINTING STRUCTURE AT	LS	6430.00 6430.01 6430.02 6430.03
181	PAINTING PILES AND MISCELLANEOUS STEEL	LS	6433.00
	SHORING		
190	TEMPORARY BRIDGE SHORING	LS	6510.55
191	BRIDGE SHORING	LS	6510.60
	MISCELLANEOUS		
200	1½” CONDUIT IN BRIDGE	LF	6601.15
201	CONCRETE COATING AT STA.	LS	6602.31
202	STRIP SEALS	LF	6610.45
203	ROADWAY JOINTS	LF	6610.48
204	TEMPORARY SUPPORTS	EA	6614.10
205	TIMBER PILE REPAIR	EA	6615.40
206	PIN REPLACEMENT	EA	6616.60
207	BEARING DEVICE REPLACEMENT	EA	6616.65
208	HANGER REPLACEMENT	EA	6616.80
209	ABUTMENT REPAIR	SF	6617.02
210	CONCRETE REPAIR	SF	6617.25
211	PIER REPAIR	EA	6617.50
212	PIER REPAIR	SF	6617.52
213	BEARING DEVICE REPAIR	EA	6618.02
214	GIRDER REPAIR	EA	6618.20

STANDARD PAY ITEMS

NOTE	CATEGORY	UNIT OF MEASURE	ITEM NUMBER
	MISCELLANEOUS, (CONTINUED)		
215	CURB REPAIR	SF	6650.50
216	CURB REPAIR	LF	6650.52
217	SEALING DECK CRACKS	LF	6670.00
218	CRACK ARRESTING HOLE	EA	6670.10
219	BRIDGE APPROACH REPAIR	CY	6960.15
	ADDITIONAL FENCING		
220	6 FOOT WELDED WIRE FABRIC FENCE – VINYL COATED	LF	7110.87
221	10 FOOT WELDED WIRE FABRIC FENCE – VINYL COATED	LF	7110.89
	GRANULAR BACKFILL		
222	GRANULAR BACKFILL	CY	8091.00

UNIT OF MEASURE ABBREVIATIONS

CF = CUBIC FOOT
CY = CUBIC YARD
EA = EACH
LB = POUND
LF = LINEAR FOOT
LS = LUMP SUM
SF = SQUARE FOOT
SY = SQUARE YARD

SECTION 2.4: CONCRETE REINFORCEMENT

2.4.1 – Concrete Reinforcement Policy

General

All plans shall specify epoxy coated reinforcing steel which conforms to the requirements of ASTM A615/A615M, Grade 60, as stated in the Standard Note # 321. Epoxy coating should be indicated in the notes on the Front Sheet and in the Bill of Bars Sheets. The only exceptions; prestressed I, and IT girders reinforcement shall not be epoxy coated. See prestressed girder policies.

There are other reinforcement notes included with the standard concrete notes in Section 2.3.4 that may be required on the Front Sheet of the plans.

Bar Clearance

The minimum clearance, in inches, measured from the face of the concrete to the surface of any reinforcing bar will be as follows:

Concrete slabs:	Top of Slab	= 2 1/2“ +/- 1/4“
	Bottom of Slab	= 1” + 1/4” - 0”
	Edge of Slab	= 3”
Open concrete rails:	All sides	= 2”
	Top of Post	= 3”
New Jersey type curbs:	Top and sides	= 2”
Elevated girder seats:	Top and sides	= 2”
Piers and bents:	All sides	= 3”
Abutments and wings:	All sides	= 3”
Approach slabs:	Top of slab	= 2 1/2” + 1/4“ - 0”
	Bottom of slab	= 3”
Grade and anchor beams:	All sides	= 3”

Bar Marks

Bar marks for all reinforcing bars will begin with a letter(s) to indicate their position in the structure. As stated in the Bill of Bars Base Sheet, the following designations should be used for most reinforcement. However, other letters or combinations may be used for more complex layouts.

B – Bents **P** – Piers **A** – Abutments, wings & grade beams
S – Bridge slab and rail or curb sections in/on bridge deck
N – Approaches and rail or curb sections in/on approaches

The first number following the letter indicates the bar size (Note: the first two numbers for bar # 10 and bigger). The last two digits are used to uniquely identify the bar being specified and should be shown in sequential order in the Bill of Bars Sheet. The following series of numbers have been designated to be associated with specific types of reinforcement:

01 thru 49	General reinforcing
70 thru 79	Light pole base reinforcing
80 thru 99	Barrier or rail reinforcing

In addition, when calling out bars on the plans, the quantity of identical bars used at a given location should be indicated with a hyphen preceeding the bar mark.

Example: 12-S501

Bill of Bars

There are a Bill of Bars Base Sheets (see Section 6) that will show the bending diagrams for the entire Bill of Bars shown in the Plans. This sheet will also contain the Bill of Bars for the approach slabs. Phased projects will indicate the number of bars in each phase in the Bill of Bars.

- The Bill of Bars for the bridge elements will be shown next to the detailed drawings. A separate Bill of Bars for each bridge element, such as: the abutment, pier (bent), bridge deck and the slab for a slab bridge; will be shown on the respective Plan Sheet where they are detailed. For example, if one detail is used for both abutments in the Plans, two Bill of Bars will be required. The following cells are available in the General Bridge cell library for detailing on the Plan Sheets.

B I L L O F B A R S													WEIGHT
MARK	NO.	LENGTH	TYPE	"A"	"B"	"C"	"D"	"E"	"F"		PIN	HOOK	Lbs.
.	.	.	.	.	.	.	.	.	.	.	.	.	.
.	.	.	.	.	.	.	.	.	.	.	.	.	.
.	.	.	.	.	.	.	.	.	.	.	.	.	.
												SUBTOTAL =	. LBS
NOTE: FOR PIN DIAMETERS, HOOK LENGTHS & BENDING DIAGRAMS SEE SHEET OF .												TOTAL =	. LBS

AC=BOB

Bill of Bars														Weight Lbs.	
Mark	Number of Bars		Length	Type	"A"	"B"	"C"	"D"	"E"	"F"		Pin	Hook	Phase 1	Phase 2
	Phase 1	Phase 2													
													Subtotal =	Lbs.	Lbs.
NOTE: For pin diameters, hook lengths & bending diagrams, see Sheet of													TOTAL =	Lbs.	

AC=PBOB

- **Bar Lengths**
  The Bridge Division's general policy for calculating bar lengths will be based on 60 ft., with a lap splice provided for bars exceeding that length. 40 ft. bar lengths shall be used for # 3 bars. Bar lengths should be rounded to the nearest inch.

- **Bar Lengths**
  When bar sets are needed, a single bar number shall be used for the entire set. A minimum, maximum and an average bar length will be shown for each set. Average length for bar sets should be rounded to half-inch increments. The cell BOBST is available in the General Bridge cell library.

BAR SETS				
MARK	MAX. LENGTH	MIN. LENGTH	NO. OF SETS	BARS PER SET
.	.	.	.	.
.	.	.	.	.
.	.	.	.	.

AC=BOBST

- **Bar Lengths**
  All bending diagram dimensions will be given as out-to-out based on the pin diameters for Grade 60 bars. Bill of Bars will show the required pin diameter and hook length according to primary stress or stirrup requirements.

2.4.2 - Rebar Data Table

The following table will be used to calculate reinforcement quantities and may be used as a design aid.

English			
Mark	**Dia. (in.)**	**Area (in.^{2})**	**Weight (lb. / ft.)**
# 3	0.375	0.11	0.376
# 4	0.500	0.20	0.668
# 5	0.625	0.31	1.043
# 6	0.750	0.44	1.502
# 7	0.875	0.60	2.044
# 8	1.000	0.79	2.670
# 9	1.125	1.00	3.400
# 10	1.270	1.27	4.303
# 11	1.410	1.56	5.313
# 14	1.693	2.25	7.650
# 18	2.257	4.00	13.60

Development and Lap Length Definitions for Deformed Bars in Tension

The following definitions are repeated from the AASHTO LRFD Bridge Design Specifications.

Development Length Ld

The development length Ld is the distance required to develop the specified strength of a reinforcing bar.

The development length Ld shall be computed as the product of the basic development length defined as AASHTO LRFD Bridge Design Specifications Article 5.11.2.1.1 and the applicable modification factor or factors defined in Article 5.11.2.1.2 and 5.11.2.1.3.

Top Bar

Horizontal reinforcement so placed that more than 12.0 in. of fresh concrete is cast below the reinforcement.

Class A Splice (lap = 1.0 x Ld)

Used in a region of low tensile stress when 75% or less of the bars are lap spliced within the required lap length.

Class B Splice (lap = 1.3 x Ld)

Used in a region of low tensile stress when more than 75% of the bars are lap spliced within the required lap length **or** in a region of high tensile stress when 50% or less of the bars are lap spliced wtihin the required lap length.

Class C Splice (lap = 1.7 x Ld)

Used in a region of high tensile stress when more than 50% of the bars are lap spliced within the required lap length.

Low Tensile Stress Region

Location where the area of reinforcement provided is equal or greater than twice the area required for strength.

High Tensile Stress Region

Location where the area of reinforcement provided is less than twice the area required for strength.

Mechanical Bar Splice

Mechanical bar splice assemblies shall develop at least 125 percent of the yield strength of reinforcing bar in tension or compression. The following cell AC=MSPLIC shall be shown on the plans where the mechanical splices are required.

MECHANICAL BAR SPLICE NOTES

All mechanical splices shall be epoxy coated couplers utilizing shear set screws. They shall develop a minimum of 125 percent of the ASTM specified yield strength of the bar. Splices shall be D250SCA Bar Lock (MBT) couplers as manufactured by Dayton/Richmond of Miamisburg, Ohio, Zap Screwlock couplers as manufactured by BarSplice Products, Inc. of Dayton, Ohio or an approved equal.

Mechanical splices shall be submitted to the Materials and Research Division for testing in accordance with the NDOR Materials Sampling Guide.

Splices shall be installed in accordance with the manufacturer's recommendations. Mechanical splices will not be paid for directly, but will be considered subsidiary to the item "Epoxy Coated Reinforcing Steel".

No adjustment in the pay quantity shown for "EPOXY COATED REINFORCING STEEL" will be made for the actual lengths of reinforcing bars required based on the mechanical bar splicer system selected by the contractor.

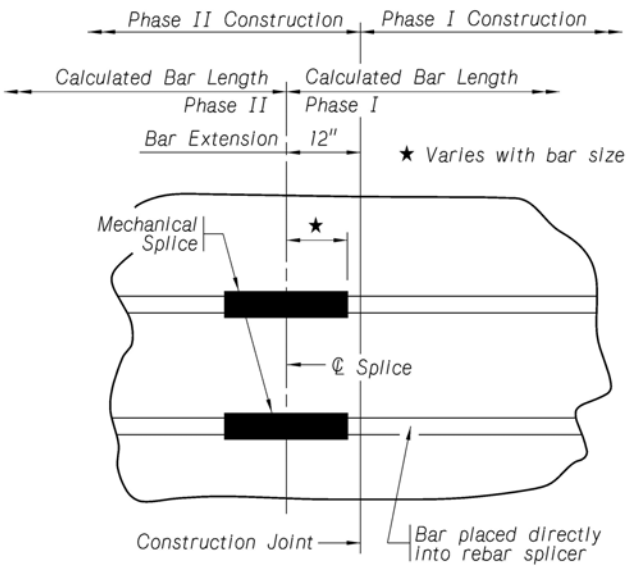

BAR SPLICE DETAIL
Not to Scale

2.4.3 - Bars Development/Splices Tables

The following tables were developed using AASHTO LRFD Bridge Design Specifications for Deformed Bars Grade 60 in Tension. Lightweight concrete and reduction factors are not included. Hook information for reinforcement is available on the Bill of Bars Sheets.

3000 PSI Concrete																							
Development Length							Tension Lap Splices									Tension Lap Splice for Top Bars								
	Others			Top Bars			Non-Epoxy			Epoxy Coated Bars						Non-Epoxy			Epoxy Coated Bars					
	Ldb	1.2	1.5	Lb	1.2	1.5*	Ld			1.2			1.5			Ld			1.2			1.5*		
				1.4*												1.4			1.4			1.4*		
Bar							A	B	C	A	B	C	A	B	C	A	B	C	A	B	C	A	B	C
3	12	12	14	13	15	15	12	12	15	12	14	18	14	18	23	13	16	21	15	20	26	15	20	26
4	12	14	18	17	20	20	12	16	20	14	19	24	18	23	31	17	22	29	20	26	34	20	27	35
5	15	18	23	21	25	26	15	20	26	18	23	31	23	29	38	21	27	36	25	33	43	26	33	43
6	19	23	29	27	32	33	19	25	33	23	30	39	29	38	49	27	35	46	32	42	55	33	43	56
7	26	32	39	37	44	45	26	34	45	39	41	54	39	51	67	37	48	63	44	57	75	45	58	75
8	35	42	52	48	58	59	35	45	59	42	54	71	52	68	88	48	63	82	58	76	99	59	77	100
9	44	53	66	61	74	74	44	57	74	53	68	89	66	85	112	61	80	104	74	96	125	74	97	127
10	56	67	83	78	93	95	56	72	95	67	87	114	83	109	142	78	101	132	93	122	159	95	123	161
11	68	82	103	96	115	116	68	89	116	82	107	139	103	133	174	96	124	163	115	149	195	116	151	198

4000 PSI Concrete																							
Development Length							Tension Lap Splices									Tension Lap Splice for Top Bars								
	Others			Top Bars			Non-Epoxy			Epoxy Coated Bars						Non-Epoxy			Epoxy Coated Bars					
	Ldb	1.2	1.5	Lb	1.2	1.5*	Ld			1.2			1.5			Ld			1.2			1.5*		
				1.4*												1.4			1.4			1.4*		
Bar							A	B	C	A	B	C	A	B	C	A	B	C	A	B	C	A	B	C
3	12	12	14	13	15	15	12	12	15	12	14	18	14	18	23	13	16	21	15	20	26	15	20	26
4	12	14	18	17	20	20	12	16	20	14	19	24	18	23	31	17	22	29	20	26	34	20	27	35
5	15	18	23	21	25	26	15	20	26	18	23	31	23	29	38	21	27	36	25	33	43	26	33	43
6	18	22	27	25	30	31	18	23	31	22	28	37	27	35	46	25	33	43	30	39	51	31	40	52
7	23	27	34	32	38	39	23	30	39	27	36	46	34	44	58	32	41	54	38	50	65	39	50	66
8	30	36	45	42	50	51	30	39	51	36	47	61	45	58	76	42	55	71	50	65	86	51	66	87
9	38	46	57	53	64	65	38	49	65	46	59	77	57	74	97	53	69	90	64	83	108	65	84	110
10	48	58	72	67	81	82	48	63	82	58	75	98	72	94	123	67	88	115	81	105	138	82	107	139
11	59	71	89	83	99	101	59	77	101	71	92	121	89	115	151	83	108	141	99	129	169	101	131	171

5000 PSI Concrete																							
Development Length							Tension Lap Splices									Tension Lap Splice for Top Bars								
	Others			Top Bars			Non-Epoxy			Epoxy Coated Bars						Non-Epoxy			Epoxy Coated Bars					
	Ldb	1.2	1.5	Lb	1.2	1.5*	Ld			1.2			1.5			Ld			1.2			1.5*		
				1.4*												1.4			1.4			1.4*		
Bar							A	B	C	A	B	C	A	B	C	A	B	C	A	B	C	A	B	C
3	12	12	14	13	15	15	12	12	15	12	14	18	14	18	23	13	16	21	15	20	26	15	20	26
4	12	14	18	17	20	20	12	16	20	14	19	24	18	23	31	17	22	29	20	26	34	20	27	35
5	15	18	23	21	25	26	15	20	26	18	23	31	23	29	38	21	27	36	25	33	43	26	33	43
6	18	22	27	25	30	31	18	23	31	22	28	37	27	35	46	25	33	43	30	39	51	31	40	52
7	21	25	32	29	35	36	21	27	36	25	33	43	32	41	54	29	38	50	35	46	60	36	46	61
8	27	32	40	38	45	46	27	35	46	32	42	55	40	52	68	38	49	64	45	59	77	46	59	77
9	34	41	51	48	57	58	34	44	58	41	53	69	51	66	87	48	62	81	57	74	97	58	75	98
10	43	52	65	60	72	73	43	56	73	52	67	88	65	84	110	60	78	103	72	94	123	73	95	125
11	53	64	79	74	89	90	53	69	90	64	83	108	79	103	135	74	96	126	89	116	151	90	117	153

* For Development Length Only, a maximum of 1.7 is used for the product of Top bar and Epoxy coating factors.

For definitions of Class A, B, and C splices and the applicable factors, see Section 2.4.2.

WELDED WIRE FABRIC TABLE

W & D Size		Nominal diameter, in.	Nominal area, in.^{2}	Nominal weight, lb./ft.
Plain	Deformed			
W31	D31	0.628	0.310	1.054
W30	D30	0.618	0.300	1.020
W28	D28	0.597	0.280	0.952
W26	D26	0.575	0.260	0.934
W24	D24	0.553	0.240	0.816
W22	D22	0.529	0.220	0.748
W20	D20	0.504	0.200	0.680
W18	D18	0.478	0.180	0.612
W16	D16	0.451	0.160	0.544
W14	D14	0.422	0.140	0.476
W12	D12	0.390	0.120	0.408
W11	D11	0.374	0.110	0.374
W10.5		0.366	0.105	0.357
W10	D10	0.356	0.100	0.340
W9.5		0.348	0.095	0.323
W9	D9	0.338	0.090	0.306
W8.5		0.329	0.085	0.289
W8	D8	0.319	0.080	0.272
W7.5		0.309	0.075	0.255
W7	D7	0.298	0.070	0.238
W6.5		0.288	0.065	0.221
W6	D6	0.276	0.060	0.204
W5.5		0.264	0.055	0.187
W5	D5	0.252	0.050	0.170
W4.5		0.240	0.045	0.153
W4	D4	0.225	0.040	0.136
W3.5		0.211	0.035	0.119
W3		0.195	0.030	0.102
W2.9		0.192	0.029	0.098
W2.5		0.178	0.025	0.085
W2		0.159	0.020	0.068
W1.4		0.135	0.014	0.049

SECTION 2.5: CONCRETE SLOPE PROTECTION DETAILS

2.5.1 - Concrete Slope Protection Policy

General Criteria

- Concrete Slope Protection shall be used to protect slopes and provide aesthetics.
- Concrete Slope Protection shall be specified on the plans as indicated on the Data Sheet.

Material Requirements

- Concrete for the slope protection shall be Class 47B-3000
- Reinforcement for concrete slope protection shall be 6X6-W2.9xW2.9 welded wire fabric with 6 in. lap splices.
- All materials shall conform to the requirements of Table 908.01 of Nebraska Standard Specifications for Highway Construction

Guidelines for Concrete Slope Protection

- Slope shall match grading cross-section
- Detail “A” generally located at half or third points with 16 ft.± spacing.
- Control joints – Detail B – are usually spaced at 4 ft. to 8 ft. centers across the slope.
- Concrete slope protection shall be used on all overpass structures.
- 4” ‘curb’ detail shall be used on the sides of the slope protection above the abutment. Transition to 8” curb at the front face of abutment or end of level section.
- 8” ‘curb’ detail shall be used on the sides of the slope protection below the abutment .

Method of Measurements

Concrete Slope Protection shall be measured by the square yard of finished surface area including turndowns.

Basis of Payment

Concrete Slope Protection will be paid for as “Concrete Slope Protection SY”

CONCRETE SLOPE PROTECTION DETAILS

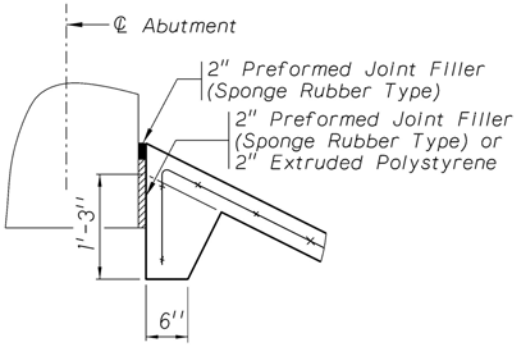

EDGE DETAIL AT ABUTMENT

Not to Scale

(URBAN BRIDGES)

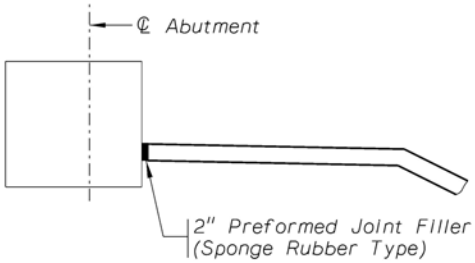

EDGE DETAIL AT ABUTMENT

Not to Scale

(RURAL BRIDGES)

The SBS Asphalt Base Sheets and the Preformed Joint Filler (Sponge Rubber Type), shall not be paid for directly, but shall be considered subsidiary to the Pay Item, "CONCRETE SLOPE PROTECTION".

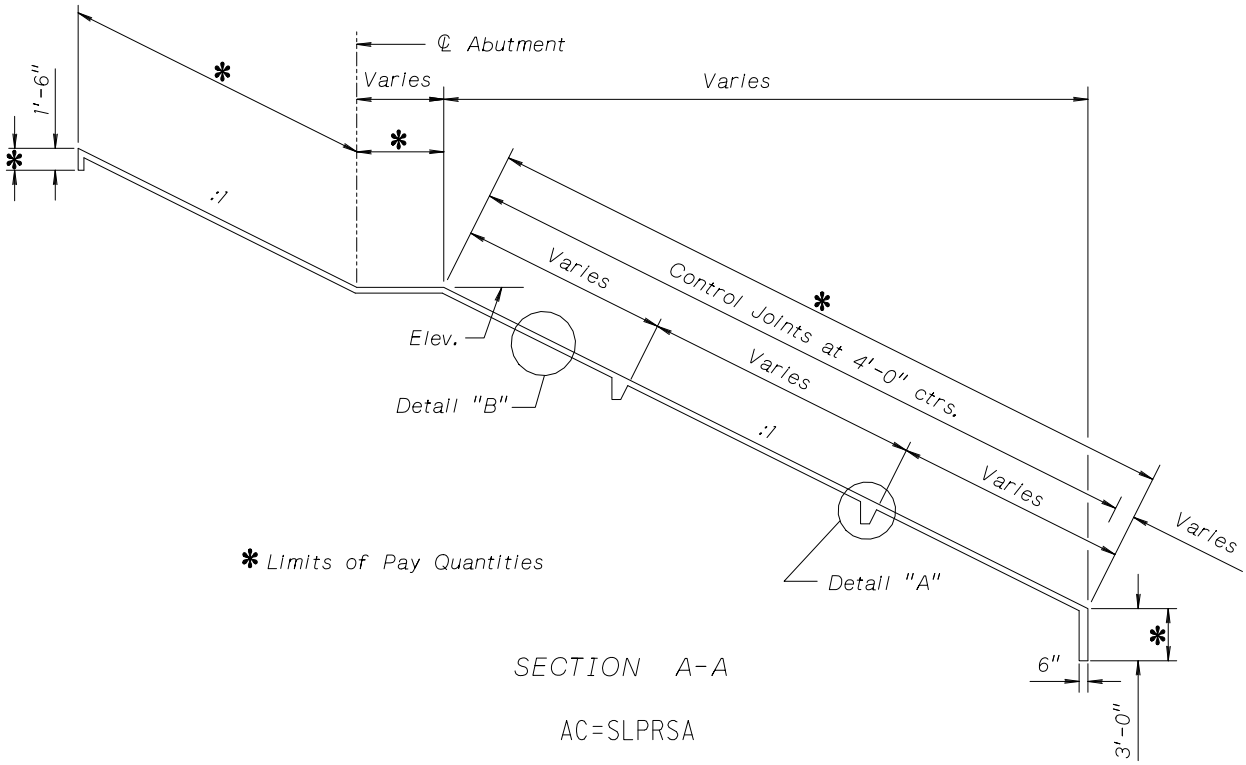

SECTION A-A

AC=SLPRSA

CONCRETE SLOPE PROTECTION DETAILS (CONTINUED)

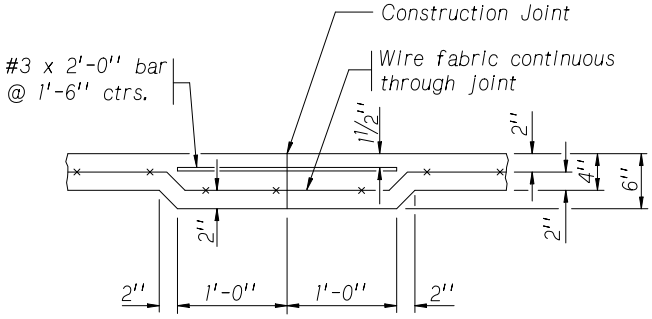

OPTIONAL CONSTRUCTION JOINT

AC=SLPRCJ

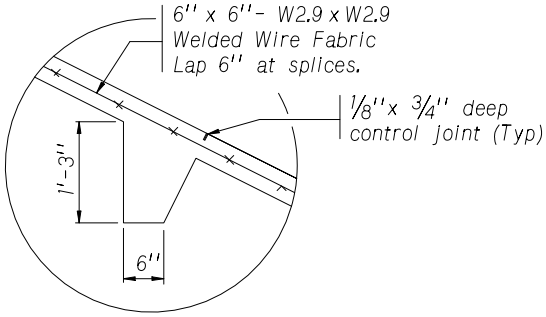

DETAIL ''A''

AC=SLPRDA

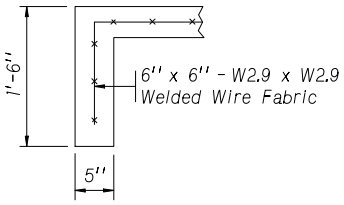

SECTION C-C

AC=SLPRSC

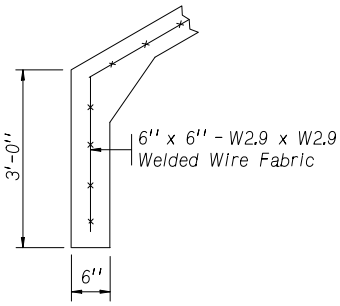

SECTION D-D

AC=SLPRSD

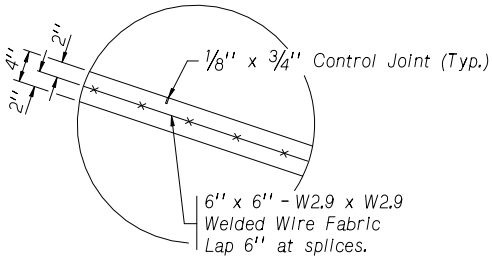

DETAIL ''B''

AC=SLPRDB

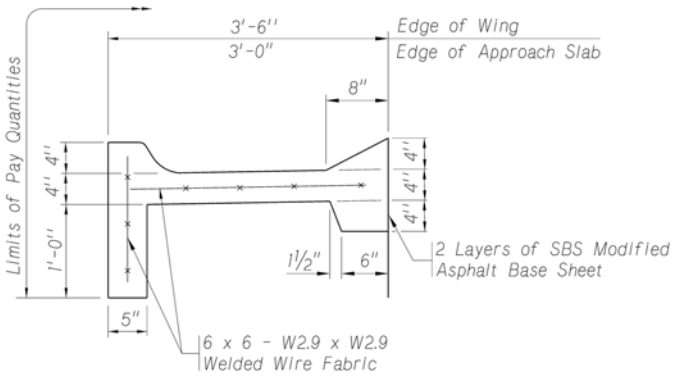

EDGE DETAIL AT AND ABOVE ABUTMENT

Not to Scale

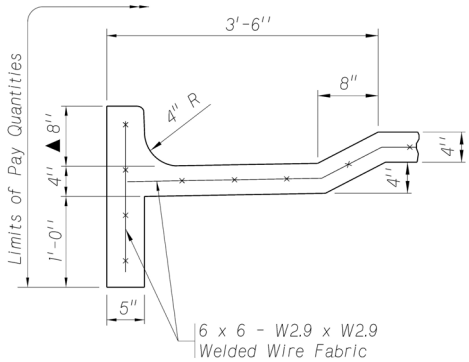

EDGE DETAIL BELOW ABUTMENT

Not to Scale

2.5.2 – Riprap Policy

General Criteria

Riprap will be specified on the Plans as indicated on the Data Sheet. Riprap must be placed along the abutment wings, as stated in the Wing Policy, and must be added if it is not specified in the Data Sheet riprap layout.

Broken Concrete

Designers must verify the volume of broken concrete riprap available on the project. Sources may include the existing structure, other locations on the project, or other locations specified by the District. The Plans or Special Provisions must specify the designated areas where the broken concrete riprap may be obtained by the Contractor. If there is not enough existing concrete to provide the required riprap specified on the Data Sheet, the Designer should request the Hydrology Section to modify their riprap layout or specify additional rock riprap (Type A, B, or C).

Broken Concrete Volume

The volume of broken concrete available to be used as riprap will be the actual unbroken (existing) concrete volume. This will allow for approximately 30% losses when the concrete is placed as broken concrete riprap. The in-place density of broken concrete riprap will be 1.35 Ton/CY. See Rock Riprap for calculation of quantities.

Bituminous Overlays

The following paragraph must be included in the Special Provisions; normally in "Preparation of Bridge at Station _____".

> Bituminous material may not be used as broken concrete riprap. Concrete structures that have a bituminous overlay must have the overlay removed prior to removal of the structure if the concrete is to be used as riprap.

Rock Riprap

The in-place density of rock riprap (Type A, B, or C) will be 1.35 Ton/CY. Therefore, the quantity of riprap should be based on the following equation:

(Riprap Volume) CY x 1.35 Ton/CY = Riprap Quantity (Ton)

Salvaging and Placing Topsoil on Riprap

6 inch compacted topsoil shall be shown on the plans at the following locations. Topsoil for environmental requirements shall extend from the higher of the Ordinary High Water elevation or 3 feet above flowline elevation to the top of the natural high bank. This topsoil shall extend out from the drip line protection to the limits of riprap. Riprap for drip line protection is always placed on the natural high bank area and does not normally require topsoil. Topsoil for animal transport shall not be placed on slopes and will go from one limit of riprap to the other including under the structure. 6 foot of clearance is required for topsoil for animal transport. The Designer should contact Roadway Design and Hydraulics about the topsoil requirements.

Payment

NDOR Standard Specifications, Section 905 states that rock riprap will be paid for as **"Rock Riprap, Type A, B, or C"** (Ton). Section 906 states that broken concrete riprap will be paid for as **"Broken Concrete Riprap"** (Ton).

Section 3
Bridge Superstructure

SECTION 3.1: General Superstructure

3.1.1 - Deck Design Policy 3.02
3.1.2 - Girder Design Policy 3.05
3.1.3 - Girder Shims 3.06
3.1.4 - Sidewalk Policy 3.08
3.1.5 - Roadway Median and Curb Policy 3.09
3.1.6 - Floor Drain Policy 3.10
3.1.7 - Expansion Device Policy 3.11
3.1.8 - Concrete Expansion Tables 3.13
3.1.9 - Steel Expansion Tables 3.15
3.1.10 - Class I, II, and III Deck Repair and Overlay Policy 3.17

SECTION 3.2: Concrete Slab Bridges

3.2.1 - Concrete Slab Bridge Policy 3.19

SECTION 3.3: Prestressed Concrete Girders

3.3.1 - General Prestressed Girder Policy 3.22
3.3.2 - Prestressed I Shaped Girder Policy 3.26
3.3.3 - Prestressed Inverted Tee Girder 3.32
3.3.4 - Post-Tensioned I Shaped Girder Policy 3.36

SECTION 3.4: Steel Girder Design

3.4.1 - General Steel Girder Design Policy 3.41
3.4.2 - Field Splice Policy 3.47
3.4.3 - Bearing Stiffener Design Policy 3.50
3.4.4 - Steel Girder Separator Policy 3.52
3.4.5 - Welded Plate Girder Policy 3.55
3.4.6 - Rolled Beam Girder Policy 3.57

SECTION 3.5: Bearing Devices

3.5.1 - General Bearing Design Policy 3.58
3.5.2 - Bearing Selection 3.61
3.5.3 - Sole Plates 3.62
3.5.4 - Elastomeric Bearing 3.65
3.5.5 - Cotton Duck Pad 3.69
3.5.6 - Confined Elastomeric (Pot) Bearing 3.71
3.5.7 - Bearing Pedestal Policy 3.72
3.5.8 - Bearing Details 3.73
3.5.9 - Bearing Shop Plan Policy 3.75

SECTION 3.6: Safety Barrier Policies

3.6.1 - Concrete Barrier Policy 3.76
3.6.2 - Concrete Rail Policy 3.82
3.6.3 - Pedestrian Barrier Rail Policy 3.95
3.6.4 - Pedestrian Railing (Chain Link Type) 3.96

SECTION 3.1: GENERAL SUPERSTRUCTURE

3.1.1 – Deck Design Policy

General Deck Criteria

Concrete decks supported on longitudinal girders – Except the Inverted Tee – shall be designed using the empirical deck design in accordance with the current AASHTO LRFD Bridge Design Specifications. Concrete design strength (f'c) shall be 4000 psi. Stay-in-place concrete deck forms will be allowed.

Empirical Deck Design

Deck Thickness

Deck thickness shall be as stated below, based on the effective span length between girders. Typical empirical deck reinforcement shall be as stated in the following paragraphs and shall not change with different deck thicknesses.

Effective Span	Deck Thickness
Up to 9 ft. - 6 in.	7.50 in.
9 ft. - 6 in. to 10 ft. - 6 in.	8.00 in.
10 ft. - 6 in. to 11ft. - 6 in.	8.50 in.

Transverse Bars

The clear cover for transverse bars shall be as stated in the Concrete Reinforcement Policy. The transverse bar spacing shall be measured along the CL roadway and placed perpendicular to girders with bar sets provided at the end of floor. Top bars shall be # 4 at 12 in. centers with the first space being 6 in. This will stagger the top and bottom transverse bar layout. The bottom bars shall be # 5 bars at 12 in. centers.

Longitudinal Bars

Longitudinal bar layouts should begin 3 in. from the edge of slab. The top bars will be # 4 at 12 in. centers. The bottom bars will be # 5 bars at 12 in. centers with the first space being 6 in. This will stagger the top and bottom longitudinal bar layout.

Additional reinforcement shall be provided in the top of the slab on structures continuous over the piers.

Skewed Decks

Additional end zone reinforcement will not be required in the deck at the turndown or integral abutments. In other situations where the skew requirements of AASHTO LRFD Bridge Design Specifications, Section 9.7.2.5 applies, the additional reinforcement in the deck end zones is required; it will be provided in the Plans as shown in the Layout Sketch. Structures wider than 44 ft. may consider more precise bar layouts.

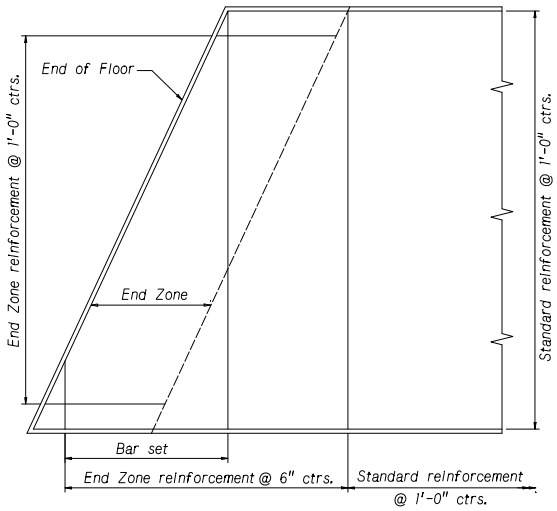

End Zone reinforcement layout for skews greater than 25°
(Typical top and bottom)

Phased Decks

Bridge decks to be built under phasing shall meet the empirical deck cantilever requirements for the overhang provided in the first phase of construction. Closure pours will be required whenever the dead load deflection exceeds 2 in. When closure pours are required, standard note # 014 should be shown and the intermediate diaphragms left out or bolts left loose until after the Phase II pour. Details are to be shown on the typical cross-section.

Cantilever Design Criteria

Future surfacing shall not be included in cantilever dead load. The effective depth shall not be reduced for a wearing surface.

For slab overhang up to 4 ft.-6 in. on NU and steel girder bridges with empirical decks and inverted tee girder bridges with 8 inch decks..

- Minimum slab thickness shall be 8 in.
- Reinforcement for slab overhang shall be 2 - # 6 bars at 4 in. centers placed between top slab reinforcement (match equivalent area of steel for non empirical decks). The # 6 bars shall be fully developed but shall not be terminated in the same section. (See details below.)

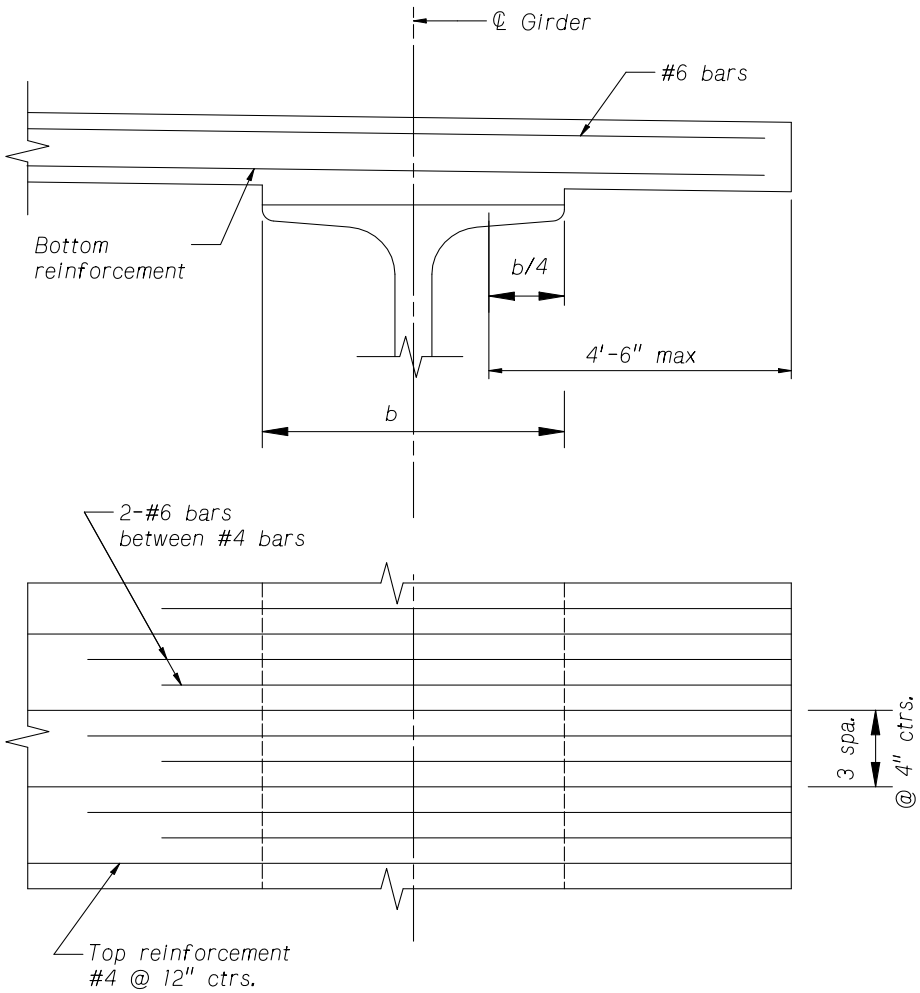

OVERHANG DETAILS
(Showing transverse reinforcement only)
Not to Scale

Drip Bead

A drip bead must be placed on all bridge decks and concrete slab bridges. The cell shown at right, AC=DRIPBE, is available in the CAD library.

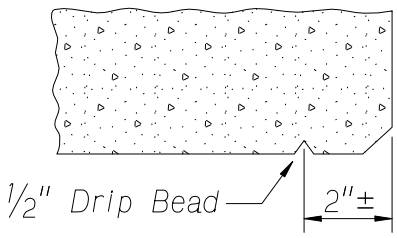

DRIP BEAD DETAIL

AC=DRIPBE

Roadway Crown

Crown of the bridge deck must be shown on all Plans, preferably on a Roadway cross-section sheet. The cell shown, AC=CROWN, is available for a standard 2% crown.

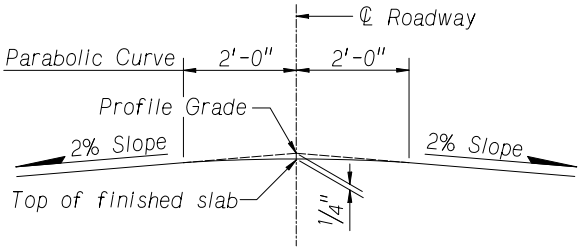

CROWN TEMPLET

AC=CROWN

Pouring Sequence

Optional transverse construction joints will be shown on the plans for placement of concrete slabs and bridge decks. The location of these transverse joints will be near the dead load moment point of counter-flexure of the supporting member. A pour may be terminated only at the completion of a positive moment area. The optional transverse construction joints must be parallel to the supports. On bridges over 49 ft. wide, optional longitudinal construction joints should be provided.

Pouring Diagram

A pouring diagram and note, as shown below, should be placed on the General Plan and Elevation Sheet of the Plans. The note is available as the cell, AC=POURSQ. Continuous bridges with spans more than 175 ft. may require a special concrete placing sequence.

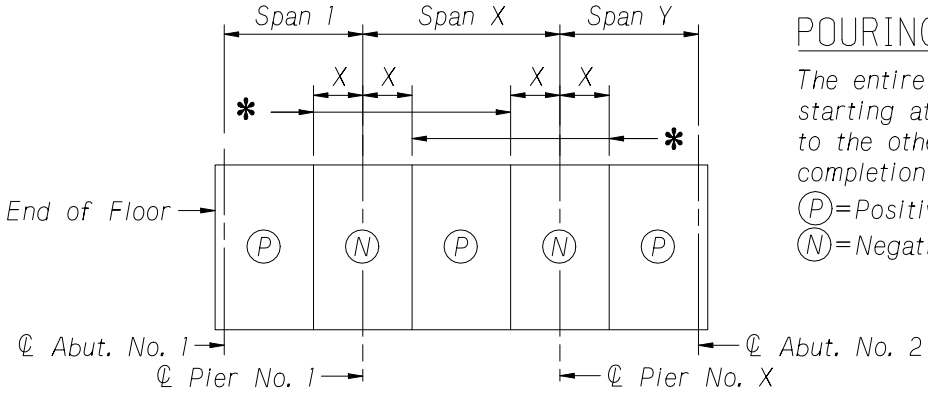

POURING DIAGRAM

* Optional Construction Joints (Pour in Direction of Arrows)

POURING SEQUENCE:

The entire slab shall be poured starting at either end and proceeding to the other end, stopping at the completion of any "P" section.

(P)=Positive moment section

(N)=Negative moment section

AC=POURSQ

Payment

All concrete provided for the rail, median, deck, diaphragms, and light bases shall be included in the Pay Item, **"Class 47BD-4000 Concrete for Bridge"** (CY).

All reinforcing steel provided for the rail, median, deck, and diaphragms shall be included in the Pay Item, **"Epoxy Coated Reinforcing Steel"** (LB.)

3.1.2 – Girder Design Policy

The following deflection limits shall be used to control deflection:

- Vehicular load, general span/800
- Vehicular and/or pedestrian loads span/1000
- Vehicular load on cantilever arms span/300
- Vehicular load and/or pedestrian loads on cantilever arms span/375

For up to 5 - girder bridges, minimize overhang and if the exterior girder controls, use exterior girder design for all girders. For more than 5 - girder bridges, minimize the overhang and use the interior girder design for the entire bridge.

For all bridges on the State highway system, the load factor for vehicular live load (LL) and vehicular dynamic load allowance (IM) for Strength I in Table 3.4.1-1, Load Combinations and Load Factors, of the AASHTO LRFD Bridge Design Specifications shall be increased from 1.75 to 2.0.

Design Tandems as per the commentary of Article 3.6.1.3.1 shall be applied on all bridges that carry Interstate and Expressway traffic.

Submerging girders shall be avoided and only permitted when justified hydraulically, with structural analysis on girders, connections and piling, and with the approval of the Bridge Engineer. Vent holes will be required.

Structural concrete overlays, up to the original deck thickness, may be considered part of the deck during analysis.

LFD Review

When reviewing existing girders designed by previous AASHTO Standard Specifications odes, the bonded length of prestressing strands (Section 9.28 in the 17th Edition) shall be based upon a 1.0 factor for girders <= 24 inches in height.

3.1.3 – Girder Shims

The purpose of this policy is to establish criteria for processing of girder shims for all steel and prestressed girder bridges.

For longer bridges (where the entire slab is not expected to be placed in one day), the slab may be placed in sections so that the new pour is placed on the non composite girders while the previously poured sections became composite and may have the forms attached. To reduce these variances, especially in long span steel bridges, Designers must provide the Standard Note # 236 on the Front Sheet so that Contractors can submit their pouring sequence before shim dimensions are calculated.

Girder Shim Forms

All forms required for girder shims, including deflections, should be filled out completely except the items “H.I. Elevation” and “Rod Reading”. The individual who completes the forms will then enter the data into the shim program and check that the elevations match those shown on the plans. The originals of these forms will be placed in the calculation’s file and two copies sent to the Project Manager.

Data Transfer

The girder shim input forms shall be sent electronically to the Project Manager so that the field personnel can enter the rod readings and H.I. elevation. The Project Manager will be informed by phone that the file has been sent electronically. In order for field personnel to transmit girder shim information to the Bridge Division in an effective manner, the following information will be included on the first sheet of the “Girder Shims” form. Include the Assistant Bridge Engineer’s name, phone number, and email address.

Deflections

Deflections for shims will be computed based on the dead loads due to slab, rail or barrier and median. This dead load will be applied equally to all girders. The deflections will be calculated at the span tenth points. A deflection or shim table shall be included on the plans.

Shim Shots

Shim shots may be taken before or after the turndowns and diaphragms are poured (and concrete girders are at least 30 days old), and are valid for 60 days. Standard Note # 010 must be shown on the Front Sheet and the following guidelines should be used for establishing the points at which rod readings are taken:

Straight Continuous Steel Girders	For all girders, give “X” distances along the top flange centerline at 10 feet intervals and at the centerline of all supports.
Cantilever Steel Girders	Give “X” distances at 10 feet intervals, at the centerline of hinges and supports.

Shim Shots (continued)

Steel Girders	For all girders, give “X” distances along the top flange centerline at 10 feet intervals and at the end of top flange at supports.
Prestressed NU Girders	For all girders, give “X” distances along the outside edges of the top flange at 10 feet intervals and at the end of top flange at supports.
Prestressed Inverted Tee Girders	One line of shots on each exterior girder and the girder (or two girders) at the centerline of the roadway also will be required. Give “X” distances at 10 feet intervals and at the centerline of bearing at supports on the plywood form adjacent to the stem of the inverted tee. For all other inverted tee girders take a shim shot at the centerline of the span for all spans. Provide the cell shown, AC=IT SHIM SHOTS, on the plan set.

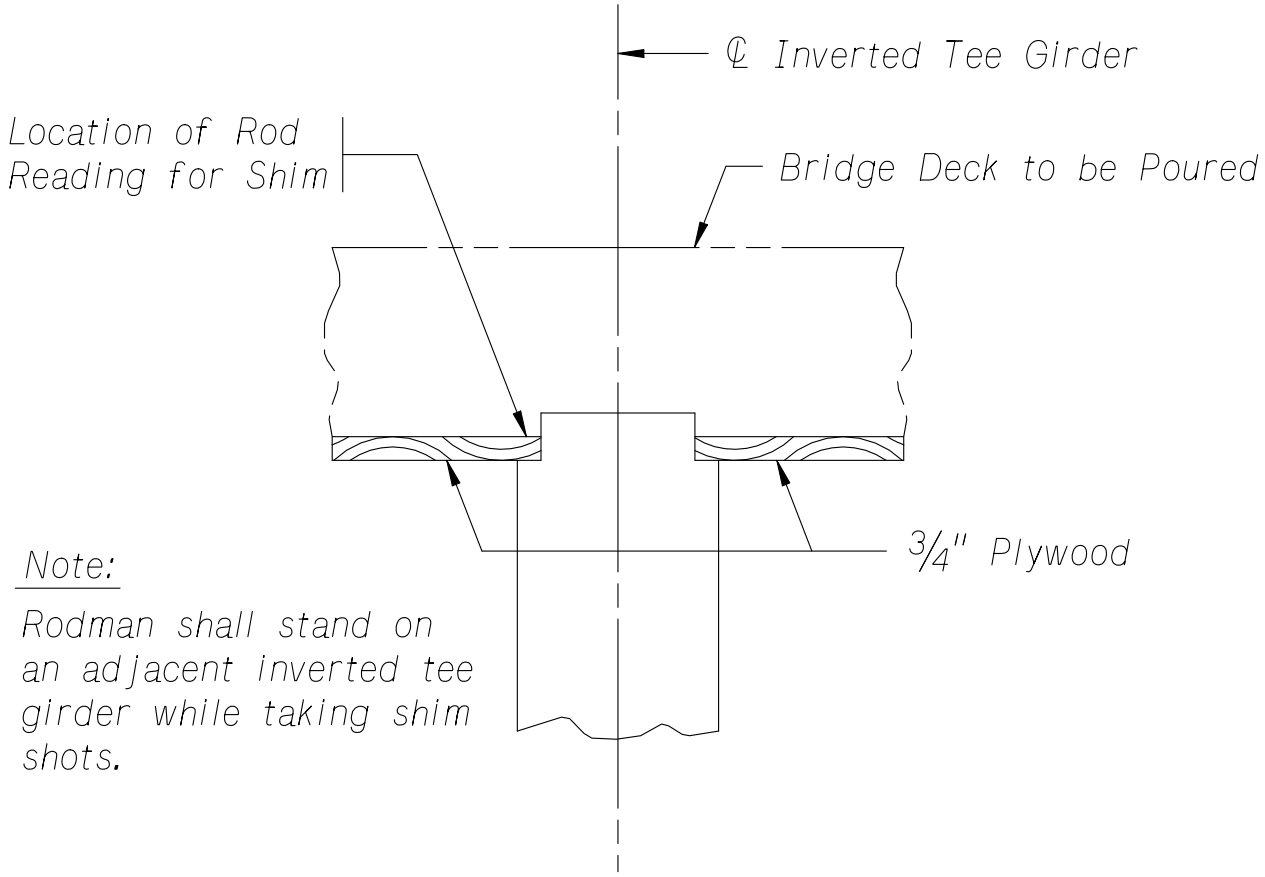

SHIM SHOT LOCATION

AC=IT SHIM SHOTS

3.1.4 – Sidewalk Policy

General Design Criteria

Sidewalks must meet the requirements set forth in the Americans with Disabilities Act (ADA).

Sidewalk Width

Sidewalks on the bridge shall be constructed 2 feet wider than the approaching sidewalk to accommodate handle bars for bicycle traffic with a minimum clear width of 7 feet and a maximum clear width of 10 feet.

Approach Slabs

Bridge Designers need to check with the Roadway Designer to ascertain specific information intended for the sidewalk. These limitations aside, the following guidelines apply to the sidewalk next to the approach slabs.

1. In all cases, the grade beam and approach section layout should extend to the outside limits of the sidewalk. This allows for placement of pedestrian protection to embankment grade elevations.
2. Designers should consider extending expansion devices to the outside edge of the sidewalk for significant movements. This provides a smoother ride for wheelchairs and bicycles. When expansion devices are extended, the bridge sidewalk should be provided into the paving section a minimum of 5 feet by extending the paving section to the outside of the sidewalk. This provides a smooth transition from the bridge structure to the sidewalk.
3. If surfacing is provided at guardrail posts, it should be asphalt. The guardrail systems require wooden post deflections to meet safety performance standards.

Concrete Rail

All concrete rail on the bridge and approach sections must be closed to prevent icing of the sidewalk.

3.1.5 – Roadway Median and Curb Policy

Median and curb layouts should be obtained from the Roadway Designer.

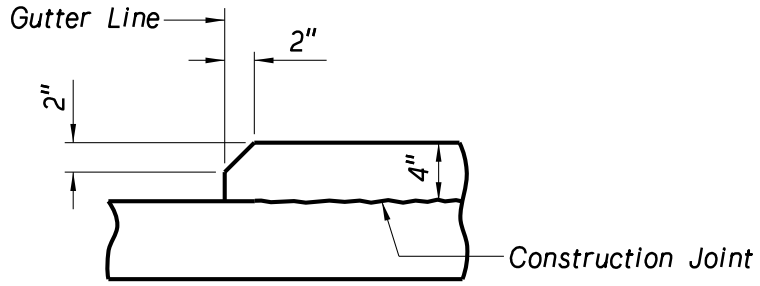

CURB DETAIL

AC=CURB1

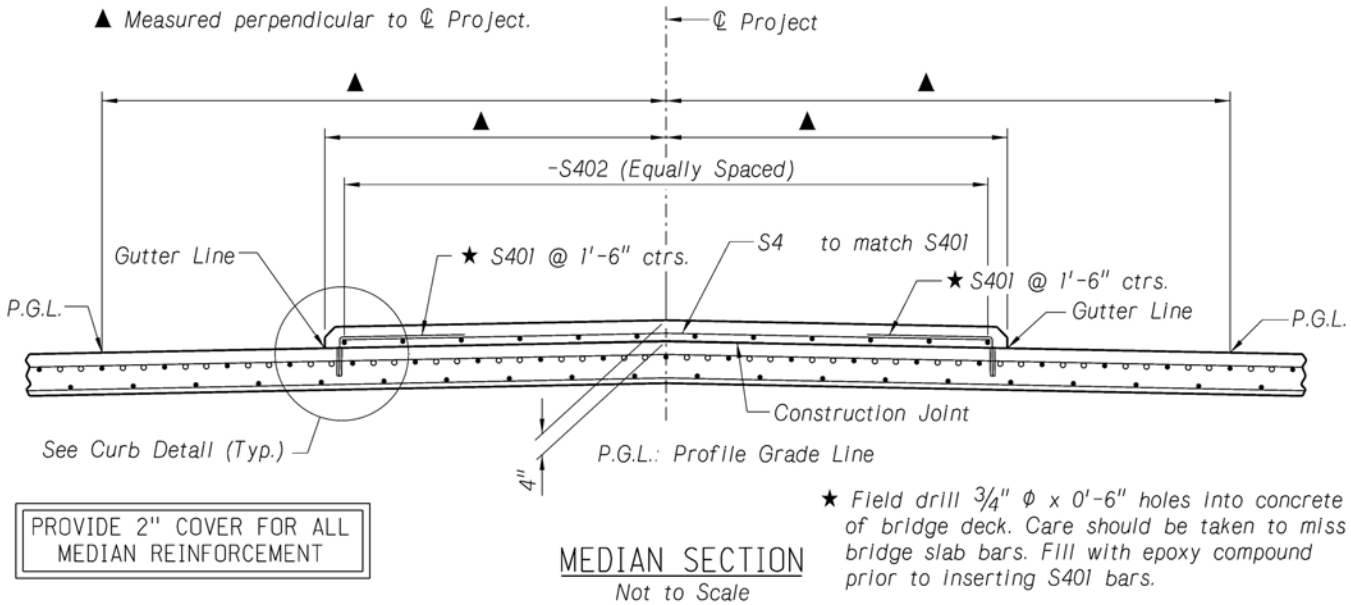

MEDIAN SECTION

Not to Scale

AC=CURB2

3.1.6 – Floor Drain Policy

General Criteria

When closed rail or concrete barrier are specified for a bridge, Designers will submit plan dimensions of the bridge deck and roadway drainage information to the Hydraulic Section to determine if floor drains are required. For high speed roadways (=> 45 mph) the allowable spread of storm water is the lowest edge of the driving lane(s). For low speed roadways (< 45 mph) the allowable spread of storm water is the shoulder width of the highway plus one half of the (outer) driving lane width. These spreads are based on a 10 year / 5 minute storm event. For phased construction (low speed) a 2 year / 5 minute storm event will be used.

Floor drain designs will specify that the vertical structural tubing (drop tubes) extend at least 4 in. below the bottom flange of the girder or concrete slab bridge. In locations where runoff is not allowed to free fall, drainage systems shall be specified to carry the water to grade. Cleanouts will be provided in the design of the drainage system for all straight sections of pipe. Examples of such locations would be near parking lots, traffic or railroads.

The point of discharge from the drains shall be evaluated to determine erosion potential. Designers should take appropriate steps to avoid erosion problems at all floor drains. Curbed edges on slope protection or splash blocks should be used to control water flow.

Coatings

All girder and slab bridges will have galvanized floor drains.

Reference File

There is a reference file (FLRDRNCTE.DGN) available for detailing. The reference levels contain the following detailing options:

Level 50 = Galvanized Floor Drain
Level 51 = Painted Floor Drain
Level 52 = Standard Inlet

Payment

NDOR Standard Specifications state that floor drains will be paid for using the Pay Item, **"Floor Drains"** (EA). Drainage systems, which includes the floor drains, will be paid for at specific locations using the Pay Item, **"Drainage System at Station _____"** (EA).

3.1.7 – Expansion Device Policy

General

- Horizontal Movement due to thermal effects (TM) for expansion joints shall be calculated in accordance to the Temperature Movement Policy in Section 2.2.6.
- Strip Seals and Deck Joint Seals shall be used in bridge decks.
- Typical joint details for the joint systems are shown on the Approach Slab Base Sheets (see Section 6, 6.12 thru 6.14).
- Strip seals or modular joints shall be used for all expansion joints on bridge decks.

Approach Slab Expansion Devices

The following types of expansion devices shall be specified by the Bridge Designer based on the Temperature Movement (TM) required at the joint location.

Preformed Joint Filler

Preformed joint filler joints may be specified for TM ≤ ½ in. Preformed joint filler, when used as approach slab expansion device, is subsidiary to the Pay Item, "Concrete for Pavement Approaches Class 47BD-4000".

Preformed Expansion Joint

Preformed Expansion Joints may be specified for joints with a Temperature Movement range of ½ in. < TM ≤ 2 ½ in. and shall meet the requirements of the Preformed Expansion Joint Special Provision. Temperature Movement in the range of 1 in. < TM ≤ 2 ½ in. shall call for a Type A Joint. TM ≤ 1 in. shall call for a Type B joint. A table will be shown on the plans to provide the contractor with the appropriate joint width to construct based upon the anticipated temperature at the time of pour. See Section 3.1.8 (Concrete Expansion Tables) and 3.1.9 (Steel Expansion Tables) for data.

The Pay Item for this joint system shall be **"Preformed Expansion Joint (Type A or B)"** (LF).

The Preformed Expansion joint may be either a Precompressed Polyurethane Foam joint (PPF) or a Preformed Silicone joint.

Strip Seal

Strip seals shall be specified for 2 1/2 in. < TM ≤ 4 in.; and shall meet the requirements of Section 730, "Strip Seals" in the Standard Specifications. Block outs must be provided for installation. All installations must call for a 50 °F. median temperature with a 1/8 in. gap variation for every Y °F. All strip seals shall be paid for by using the Pay Item, **"Strip Seal"** (LF).

Silicone Joint Sealer

Silicone Joint Sealer may be specified for rehabilitation projects to seal existing or new joints on or at the end of decks approximately 2 in. or less in width.

Movement Rating (MR) for Bridge Deck Expansion Devices

Installation and design of the expansion device(s) in bridge deck will be based on the Movement Rating (MR), where

MR = TM + 1 in.	For steel structures
MR = TM + 1 ¾ in.	For concrete structures

Deck Joint Seals

Deck Joint Seals shall be specified for TM greater than 4 in. All Deck Joint Seals shall be the Modular type joints and meet the requirements of Section 729, "Deck Joint Seals" in the Standard Specifications. All Modular joints shall be paid for by using the Pay Item, **"Deck Joint Seal, Type IV"** (LF). The following two manufacturers of Modular joints must be shown in the Plans.

1. D. S. Brown – Steelflex Modular, with appropriate size number.
2. Wabo Modular, with appropriate "D" size number.

3.1.8 Concrete Expansion Tables

Concrete - Joint Openings for PPF -

Length (ft.)	Temperature (°F) 35-40	40-45	45-50	50	50-55	55-60	60-65	65-70	70-75	75-80	80-85	TM (in.)	Type
80	2	2	2	2	2	2	2	2	1.75	1.75	1.75	0.52	B
85	2	2	2	2	2	2	2	2	1.75	1.75	1.75	0.55	B
90	2	2	2	2	2	2	2	1.75	1.75	1.75	1.75	0.58	B
95	2	2	2	2	2	2	2	1.75	1.75	1.75	1.75	0.62	B
100	2	2	2	2	2	2	2	1.75	1.75	1.75	1.75	0.65	B
105	2	2	2	2	2	2	2	1.75	1.75	1.75	1.75	0.68	B
110	2	2	2	2	2	2	2	1.75	1.75	1.75	1.75	0.71	B
115	2	2	2	2	2	2	2	1.75	1.75	1.75	1.75	0.75	B
120	2.25	2	2	2	2	2	1.75	1.75	1.75	1.75	1.75	0.78	B
125	2.25	2	2	2	2	2	1.75	1.75	1.75	1.75	1.75	0.81	B
130	2.25	2	2	2	2	2	1.75	1.75	1.75	1.75	1.75	0.84	B
135	2.25	2	2	2	2	2	1.75	1.75	1.75	1.75	1.75	0.87	B
140	2.25	2	2	2	2	2	1.75	1.75	1.75	1.75	1.75	0.91	B
145	2.25	2	2	2	2	2	1.75	1.75	1.75	1.75	1.75	0.94	B
150	2.25	2	2	2	2	2	1.75	1.75	1.75	1.75	1.5	0.97	B
155	2.25	2	2	2	2	2	1.75	1.75	1.75	1.75	1.5	1.00	A
160	2.25	2	2	2	2	2	1.75	1.75	1.75	1.75	1.5	1.04	A
165	2.25	2	2	2	2	2	1.75	1.75	1.75	1.75	1.5	1.07	A
170	2.25	2	2	2	2	2	1.75	1.75	1.75	1.75	1.5	1.10	A
175	2.25	2.25	2	2	2	1.75	1.75	1.75	1.75	1.5	1.5	1.13	A
180	2.25	2.25	2	2	2	1.75	1.75	1.75	1.75	1.5	1.5	1.17	A
185	2.25	2.25	2	2	2	1.75	1.75	1.75	1.75	1.5	1.5	1.20	A
190	2.25	2.25	2	2	2	1.75	1.75	1.75	1.75	1.5	1.5	1.23	A
195	2.25	2.25	2	2	2	1.75	1.75	1.75	1.75	1.5	1.5	1.26	A
200	2.25	2.25	2	2	2	1.75	1.75	1.75	1.75	1.5	1.5	1.30	A
205	2.25	2.25	2	2	2	1.75	1.75	1.75	1.75	1.5	1.5	1.33	A
210	2.25	2.25	2	2	2	1.75	1.75	1.75	1.5	1.5	1.5	1.36	A
215	2.25	2.25	2	2	2	1.75	1.75	1.75	1.5	1.5	1.5	1.39	A
220	2.25	2.25	2	2	2	1.75	1.75	1.75	1.5	1.5	1.5	1.43	A
225	2.25	2.25	2	2	2	1.75	1.75	1.75	1.5	1.5	1.5	1.46	A
230	2.25	2.25	2	2	2	1.75	1.75	1.75	1.5	1.5	1.5	1.49	A
235	2.25	2.25	2	2	2	1.75	1.75	1.75	1.5	1.5	1.5	1.52	A
240	2.25	2.25	2	2	2	1.75	1.75	1.75	1.5	1.5	1.5	1.56	A
245	2.25	2.25	2	2	2	1.75	1.75	1.75	1.5	1.5	1.5	1.59	A
250	2.25	2.25	2	2	2	1.75	1.75	1.75	1.5	1.5	1.25	1.62	A
255	2.25	2.25	2	2	2	1.75	1.75	1.75	1.5	1.5	1.25	1.65	A
260	2.25	2.25	2	2	2	1.75	1.75	1.75	1.5	1.5	1.25	1.68	A
265	2.25	2.25	2	2	2	1.75	1.75	1.5	1.5	1.5	1.25	1.72	A
270	2.25	2.25	2	2	2	1.75	1.75	1.5	1.5	1.5	1.25	1.75	A
275	2.25	2.25	2	2	2	1.75	1.75	1.5	1.5	1.5	1.25	1.78	A
280	2.25	2.25	2	2	2	1.75	1.75	1.5	1.5	1.5	1.25	1.81	A
285	2.25	2.25	2	2	2	1.75	1.75	1.5	1.5	1.5	1.25	1.85	A
290	2.25	2.25	2	2	2	1.75	1.75	1.5	1.5	1.25	1.25	1.88	A
295	2.25	2.25	2	2	2	1.75	1.75	1.5	1.5	1.25	1.25	1.91	A

300	2.25	2.25	2	2	2	1.75	1.75	1.5	1.5	1.25	1.25	1.94	A
305	2.25	2.25	2	2	2	1.75	1.75	1.5	1.5	1.25	1.25	1.98	A
310	2.5	2.5	2.25	2.25	2.25	2	2	1.75	1.75	1.5	1.5	2.01	A
315	2.5	2.5	2.25	2.25	2.25	2	2	1.75	1.75	1.5	1.5	2.04	A
320	2.5	2.5	2.25	2.25	2.25	2	2	1.75	1.75	1.5	1.5	2.07	A
325	2.5	2.5	2.25	2.25	2.25	2	2	1.75	1.75	1.5	1.5	2.11	A
330	2.5	2.5	2.25	2.25	2.25	2	2	1.75	1.75	1.5	1.5	2.14	A
335	2.5	2.5	2.25	2.25	2.25	2	2	1.75	1.75	1.5	1.5	2.17	A
340	2.5	2.5	2.25	2.25	2.25	2	2	1.75	1.75	1.5	1.5	2.20	A
345	2.5	2.5	2.25	2.25	2.25	2	2	1.75	1.75	1.5	1.5	2.24	A
350	3	2.75	2.5	2.5	2.5	2.25	2	2	1.75	1.75	1.5	2.27	A
355	3	2.75	2.5	2.5	2.5	2.25	2	2	1.75	1.75	1.5	2.30	A
360	3	2.75	2.5	2.5	2.5	2.25	2	2	1.75	1.75	1.5	2.33	A
365	3	2.75	2.5	2.5	2.5	2.25	2	2	1.75	1.75	1.5	2.37	A
370	3	2.75	2.5	2.5	2.5	2.25	2	2	1.75	1.75	1.5	2.40	A
375	3	2.75	2.5	2.5	2.5	2.25	2	2	1.75	1.75	1.5	2.43	A
380	3	2.75	2.5	2.5	2.5	2.25	2	2	1.75	1.75	1.5	2.46	A
385	3	2.75	2.5	2.5	2.5	2.25	2	2	1.75	1.75	1.5	2.49	A

Joint openings shall be designed in increments of 1/4".

Minimum Joint opening @ 50° for TM > 1/2" will be 2".

50° Joint opening size will be rounded up to the nearest 1/4" for TM > 2.0"

PPF joint material shall be ordered for the 50° joint opening size + 0.25"

Formed joint opening size will be the 50° opening size adjusted to the nearest 1/4" of TM for expected casting temperatures above or below 50°. Opening is for PPF, add ¾" for Silicoflex and ½" for Wabo SPS to the nominal joint opening (A).

250' between fixed point and expansion joint

BOPP 2.2.6 TM = $\Delta T \times \alpha \times L$, concrete superstructure ΔT =90°F, $\alpha = 6.0 \times 10^{-6}$/°F, L = 250'

TM = 0.135' = 1.62"

Type B ≤ 1", 1" < Type A ≤ 2.5, 1" < 1.62" ≤ 2.5", therefore Type A joint (range = order size ± 50%)

1.62" < 2", therefore use 2" design joint opening @ 50°

± 5°F, TM = ± (5) x (0.000006) x (250) x (12) = 0.09" <1/8", therefore 2" @ 50° ± 5°

± 10°F, TM = ± 0.18", 0.125 < 0.18 < 0.25", therefore 2" + 0.25" @ 40° and 2" -0.25" @ 60°

± 15°F, TM = ± 0.27", 0.25" < 0.27" <0.375", therefore 2" + 0.25" @ 35° and 2" -0.25" @ 65°

+ 20°F, TM = 0.36", 0.25" < 0.36" <0.375", therefore 2" - 0.25" @ 70°

+ 25°F, TM = 0.45", 0.375" < 0.45" <0.5", therefore 2" - 0.5" @ 75°

+ 30°F, TM = 0.54", 0.5" < 0.54" <0.625", therefore 2" - 0.5" @ 80°

+ 35°F, TM = 0.63", 0.625" < 0.63" <0.75", therefore 2" - 0.75" @ 85°

Ambient Temperature

Range During Pour	Opening
35° - 45°	2.25"
45° - 55°	2.00"
55° - 70°	1.75"
70° - 80°	1.5"
80° - 85°	1.25"

PPF order size 2.25"

3.1.9 – Steel Expansion Tables

Steel Girders - Joint Openings for PPF -

Length (ft.)	Temperature (°F) 35-40	40-45	45-50	50	50-55	55-60	60-65	65-70	70-75	75-80	80-85	TM (in.)	Type
50	2	2	2	2	2	2	2	2	2	2	1.75	0.51	B
55	2	2	2	2	2	2	2	2	2	1.75	1.75	0.56	B
60	2	2	2	2	2	2	2	2	2	1.75	1.75	0.61	B
65	2	2	2	2	2	2	2	2	1.75	1.75	1.75	0.66	B
70	2	2	2	2	2	2	2	2	1.75	1.75	1.75	0.71	B
75	2	2	2	2	2	2	2	2	1.75	1.75	1.75	0.76	B
80	2	2	2	2	2	2	2	2	1.75	1.75	1.75	0.81	B
85	2	2	2	2	2	2	2	1.75	1.75	1.75	1.75	0.86	B
90	2	2	2	2	2	2	2	1.75	1.75	1.75	1.75	0.91	B
95	2	2	2	2	2	2	2	1.75	1.75	1.75	1.75	0.96	B
100	2	2	2	2	2	2	2	1.75	1.75	1.75	1.75	1.01	A
105	2	2	2	2	2	2	2	1.75	1.75	1.75	1.75	1.06	A
110	2.25	2	2	2	2	2	1.75	1.75	1.75	1.75	1.75	1.12	A
115	2.25	2	2	2	2	2	1.75	1.75	1.75	1.75	1.75	1.17	A
120	2.25	2	2	2	2	2	1.75	1.75	1.75	1.75	1.75	1.22	A
125	2.25	2	2	2	2	2	1.75	1.75	1.75	1.75	1.75	1.27	A
130	2.25	2	2	2	2	2	1.75	1.75	1.75	1.75	1.75	1.32	A
135	2.25	2	2	2	2	2	1.75	1.75	1.75	1.75	1.75	1.37	A
140	2.25	2	2	2	2	2	1.75	1.75	1.75	1.75	1.5	1.42	A
145	2.25	2	2	2	2	2	1.75	1.75	1.75	1.75	1.5	1.47	A
150	2.25	2	2	2	2	2	1.75	1.75	1.75	1.75	1.5	1.52	A
155	2.25	2	2	2	2	2	1.75	1.75	1.75	1.75	1.5	1.57	A
160	2.25	2	2	2	2	2	1.75	1.75	1.75	1.75	1.5	1.62	A
165	2.25	2.25	2	2	2	1.75	1.75	1.75	1.75	1.5	1.5	1.67	A
170	2.25	2.25	2	2	2	1.75	1.75	1.75	1.75	1.5	1.5	1.72	A
175	2.25	2.25	2	2	2	1.75	1.75	1.75	1.75	1.5	1.5	1.77	A
180	2.25	2.25	2	2	2	1.75	1.75	1.75	1.75	1.5	1.5	1.83	A
185	2.25	2.25	2	2	2	1.75	1.75	1.75	1.75	1.5	1.5	1.88	A
190	2.25	2.25	2	2	2	1.75	1.75	1.75	1.75	1.5	1.5	1.93	A
195	2.25	2.25	2	2	2	1.75	1.75	1.75	1.5	1.5	1.5	1.98	A
200	2.5	2.5	2.25	2.25	2.25	2	2	2	1.75	1.75	1.75	2.03	A
205	2.5	2.5	2.25	2.25	2.25	2	2	2	1.75	1.75	1.75	2.08	A
210	2.5	2.5	2.25	2.25	2.25	2	2	2	1.75	1.75	1.75	2.13	A
215	2.5	2.5	2.25	2.25	2.25	2	2	2	1.75	1.75	1.75	2.18	A
220	2.5	2.5	2.25	2.25	2.25	2	2	2	1.75	1.75	1.75	2.23	A
225	2.75	2.75	2.5	2.5	2.5	2.25	2.25	2.25	2	2	2	2.28	A
230	2.75	2.75	2.5	2.5	2.5	2.25	2.25	2.25	2	2	1.75	2.33	A
235	2.75	2.75	2.5	2.5	2.5	2.25	2.25	2.25	2	2	1.75	2.38	A
240	2.75	2.75	2.5	2.5	2.5	2.25	2.25	2.25	2	2	1.75	2.43	A
245	2.75	2.75	2.5	2.5	2.5	2.25	2.25	2	2	2	1.75	2.48	A

Joint openings shall be designed in increments of 1/4".
Minimum Joint opening @ 50° for TM > 1/2" will be 2".
50° Joint opening size will be rounded up to the nearest 1/4" for TM > 2.0"
PPF joint material shall be ordered for the 50° joint opening size + 0.25"
Formed joint opening size will be the 50° opening size adjusted to the nearest 1/4" of TM for expected casting temperatures above or below 50°. Opening is for PPF, add ¾" for Silicoflex and ½" for Wabo SPS to the nominal joint opening (A).

90' between fixed point and expansion joint

BOPP 2.2.6 TM = $\Delta T \times \alpha \times L$, steel superstructure ΔT =130°F, $\alpha = 6.5 \times 10^{-6}$/°F, L = 90'
TM = 0.076' = 0.9126"
Type B ≤ 1", 1" < Type A ≤ 2.5, 0.9126" < 1", therefore Type B joint (range = order size ± 25%)
0.9126" < 2", therefore use 2" design joint opening @ 50°
± 5°F, TM = ± (5) x (0.0000065) x (90) x (12) = 0.0351" <1/8", therefore 2" @ 50° ± 5°
± 10°F, TM = ± 0.0702", 0.0702 < 0.125, therefore 2" @ 50° ± 10°
± 15°F, TM = ± 0.1053", 0.1053" < 0.125", therefore 2" @ 50° ± 15°
+ 20°F, TM = 0.1404", 0.125" < 0.1404" <0.25", therefore 2" - 0.25" @ 70°
+ 25°F, TM = 0.1755", 0.125" < 0.1755" <0.25", therefore 2" - 0.25" @ 75°
+ 30°F, TM = 0.2106", 0.125" < 0.2106" <0.25", therefore 2" - 0.25" @ 80°
+ 35°F, TM = 0.2457", 0.125" < 0.2457" <0.25", therefore 2" - 0.25" @ 85°

Ambient Temperature Range During Pour	Opening
35° - 65°	2.00"
65° - 85°	1.75"

PPF order size 2.25"

3.1.10 – Class I, II, and III Deck Repair and Overlay Policy

Concrete Overlays

General Criteria

- High density low slump concrete shall not be used on any bridge overlays.
- Silica Fume or 47B-OLconcrete shall be used for all overlay projects.

Layout

Designers should use caution to ensure new grade profiles provide the 2 in. minimum overlay (to the scarified depth) at all points in the cross-section of the roadway.

Bridges to be widened with an overlay and have new approach slabs should provide the standard 2 ft. - 10 in. rail height on the bridge. The approach slabs should be placed at the overlay grade and use a 2 ft. - 8 in. rail

Measurement

The following definitions for measurement shall be applied to bridge repairs.

Pay Item	Definitions
Class I Repair	The area (SY) of the existing bridge deck that is to have a ½ inch scarification or repair for overlay.
Class II Repair	20% of Class I Repair (SY) in lieu of more accurate information.
Class III Repair	5 SY in lieu of deck information.

Pay Items for Silica Fume Overlay

Concrete for Overlay – SF / 47B-OL (CY)

Class I Repair (SY)

Class II Repair (SY)

Class III Repair (SY)

Placing, Finishing, and Curing Concrete Overlay – SF / 47B-OL (SY)

Details

The details on the following page are available as CAD cells, AC=CONCOL and AC=ORLAY, and shall be included in the plans for bridge repairs.

Asphalt Overlays

Pay Items

Bridge Deck Repair Partial and Full Depth are used in place of the Class Repairs. Group 9 Pay Item ‘Membrane Waterproofing’ is shown on the plans. Asphalt overlay (by others) is noted on the plans but the Pay Item is not included.

Repair and Overlay Details

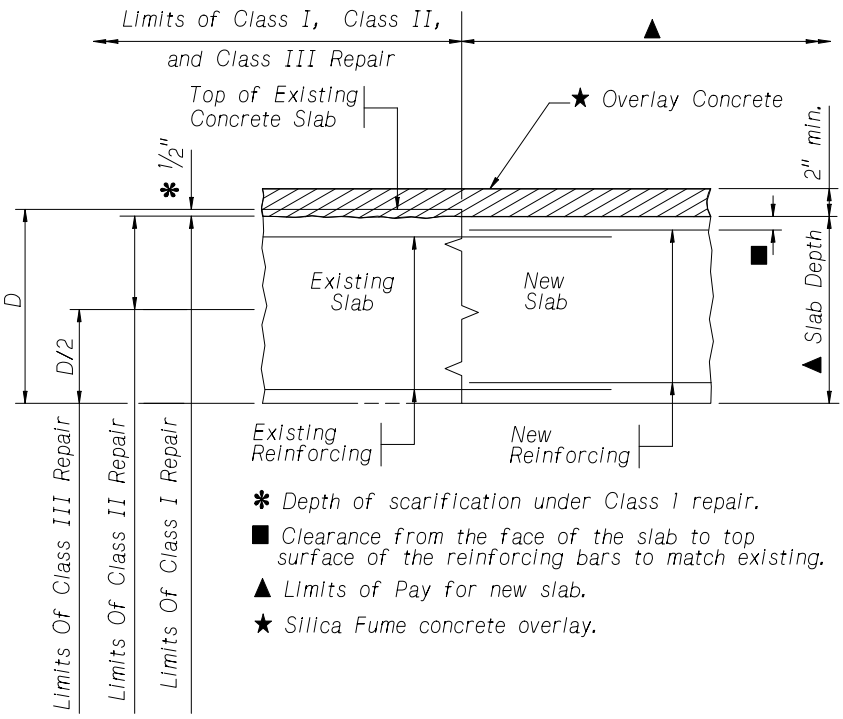

SLAB REPAIR AND OVERLAY

AC=CONCOL

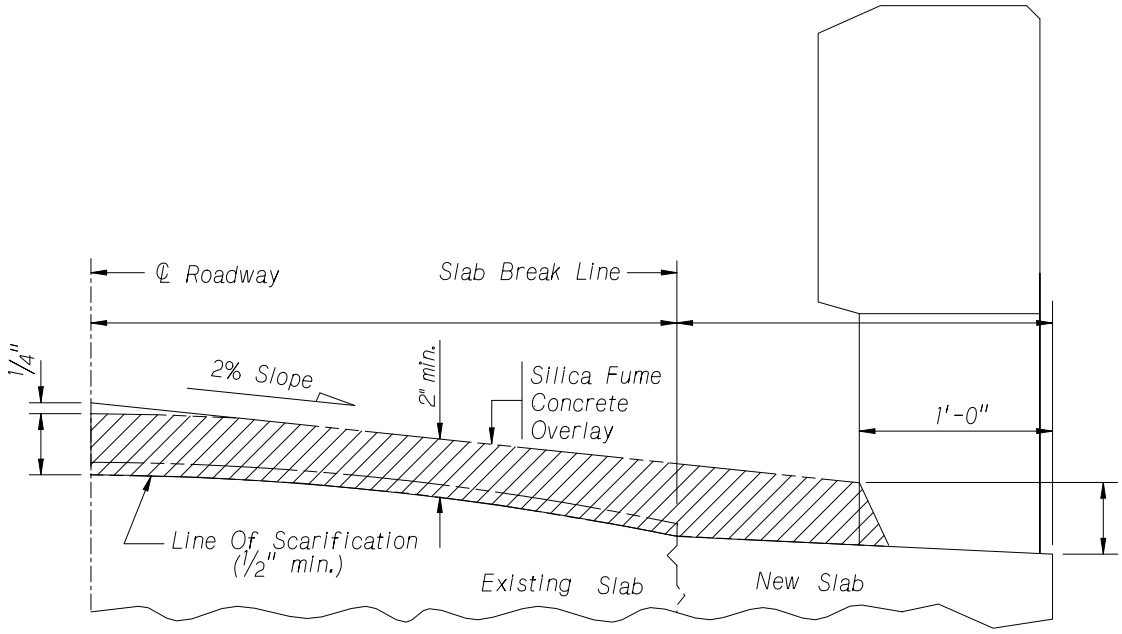

OVERLAY DETAIL

AC=ORLAY

SECTION 3.2: Concrete Slab Bridges

3.2.1 – Concrete Slab Bridge Policy

Slab Design Criteria

- A future surface load must be included in the bridge dead loads. A future surfacing (DW) is assumed to be 20 psf.
- The effective design depth will be reduced by ½ in. for a wearing surface.
- New slab bridge designs will use an f'c = 4000 psi; fy steel = 60 ksi.
- Concrete slab spans will not exceed 50 ft. unless approved by the Bridge Engineer.
- A 34 in. NU Open Concrete Rail (366 plf) was used for the barrier load.

Slab Bridge Design Table

The Slab Bridge Design Table, published in this policy, may be used to provide steel reinforcement for the bridge lengths and spans specified. The Slab Bridge Design Table was developed in accordance with the AASHTO LRFD Bridge Design Specifications. The following criteria were assumed in developing the slab design table:

- **HL-93 Live Load.**
- Development lengths calculated for epoxy coated reinforcing steel.
- Design Clear Roadway Width = 44 ft.
- DLs: NU Open Concrete Rail = 366 plf x 2/44; Future Surfacing = 25 psf.
- Top Cover = 2 ½ in., Bottom cover of 1 in., Wearing Surface Reduction = ½ in.
- Haunch Depth: 6 in. @ abutments.
- J4 bars are continuous through Span 2 for bridge lengths 40 ft. thru 65 ft.

Concrete Slab Base Sheet

The Concrete Slab Base Sheets (see Section 6, 6.17 thru 6.22) provides typical reinforcement layouts for zero, ≤30° and >30° skewed bridges. Transverse distribution steel will be placed parallel to the CL of the supports for skews up to 30°. For skews greater than 30°, the transverse distribution steel will be placed perpendicular to the CL of roadway in the following manner:

- Top reinforcement shall be # 4 bars @ 12 in. centers. Bottom reinforcement shall be # 5 bars @ 12 in. centers.
- Transverse top and bottom reinforcement will require bar sets only at the End of Floor. Additional longitudinal steel in the bottom layer (# 4 bars @ 24 in. centers) will extend through the haunch to allow the transverse steel in the bottom layer to be placed continuously over the haunch without bar sets at the piers.

The base sheets are to be coordinated with the Slab Bridge Design Table. The table provides the reinforcement and length at designated locations on the base sheet (J2 thru J11). Designers must replace the designations shown on the base sheet (J2 thru J11) with standard bar marks and the following haunch information must be included on the Plans.

- For Bridge Lengths of 40 ft. to 85 ft.

  Haunch Depth = 6 in.
  Haunch Length = 4 ft.

  Place five (5) S501 bars @ the face of each haunch.

Location	Mark	No.	Length	Type	A	B	C	D	E
J10		Varies	14'-0"	106	6'	2'	9”	9”	6'
Haunch	S404	8	14'-0"	STR					

- For Bridge Lengths of 90 ft. to 140 ft.

  Haunch Depth = 9 in.
  Haunch Length = 6 ft.
  Place seven (7) S501 bars @ the face of each haunch.

Location	Mark	No.	Length	Type	A	B	C	D	E
J10		Varies	18'-0"	106	8'	2'	1'	1'	8'
Haunch	S404	8	18'-0"	STR					

Reactions for Slab Bridge Design Table

	SERVICE I REACTIONS (Unfactored)						STRENGTH I REACTIONS (Factored)					
Bridge Length	DC Reaction Kips/ft. of width		DW Reaction Kips/ft. of width		LL Reaction (kips per lane) No Impact		DC Reaction Kips/ft. of width		DW Reaction Kips/ft. of width		LL Reaction (kips per lane) No Impact	
feet	Abutments	Bents	Abutments	Bents	Abutments	Bents	Abutments	Bents	Abutments	Bents	Abutments	Bents
40	0.74	2.65	0.11	0.38	42.32	60.16	0.93	3.31	0.17	0.57	74.05	105.27
45	0.85	3.03	0.13	0.43	43.90	63.09	1.06	3.79	0.19	0.64	76.83	110.41
50	0.96	3.44	0.14	0.47	45.31	67.26	1.20	4.30	0.21	0.71	79.30	117.71
55	1.07	3.87	0.15	0.52	46.54	70.84	1.34	4.83	0.23	0.78	81.45	123.97
60	1.20	4.32	0.16	0.57	47.64	74.50	1.50	5.40	0.25	0.85	83.36	130.38
65	1.28	4.63	0.18	0.61	48.61	77.74	1.61	5.79	0.26	0.92	85.07	136.05
70	1.42	5.11	0.19	0.66	49.54	80.57	1.78	6.38	0.28	0.99	86.69	141.00
75	1.56	5.64	0.20	0.71	50.40	83.17	1.96	7.04	0.30	1.06	88.19	145.55
80	1.72	6.17	0.21	0.75	51.20	85.63	2.14	7.72	0.32	1.13	89.59	149.84
85	1.87	6.73	0.23	0.80	51.96	87.84	2.34	8.42	0.34	1.20	90.92	153.73
90	1.98	7.83	0.23	0.85	52.51	91.46	2.47	9.79	0.35	1.28	91.89	160.06
95	2.15	8.45	0.25	0.90	53.53	93.35	2.68	10.56	0.37	1.35	93.67	163.37
100	2.32	9.08	0.26	0.94	55.14	95.17	2.90	11.35	0.39	1.42	96.49	166.55
105	2.51	9.74	0.27	0.99	56.64	96.94	3.13	12.18	0.41	1.48	99.12	169.64
110	2.69	10.43	0.28	1.04	58.06	98.64	3.37	13.04	0.43	1.55	101.60	172.62
115	2.89	11.14	0.30	1.08	59.40	100.30	3.61	13.93	0.45	1.62	103.95	175.53
120	3.09	11.87	0.31	1.13	60.71	101.95	3.87	14.84	0.47	1.69	106.24	178.41
125	3.31	12.63	0.32	1.17	61.98	103.55	4.13	15.79	0.49	1.76	108.46	181.22
130	3.52	13.40	0.34	1.22	63.18	105.12	4.40	16.75	0.50	1.83	110.57	183.95
135	3.84	14.56	0.35	1.27	64.35	106.58	4.80	18.20	0.52	1.90	112.61	186.52
140	4.08	15.38	0.36	1.31	65.47	108.08	5.10	19.23	0.54	1.97	114.57	189.14

Slab Bridge Design Table										
Design Criteria						Edge Beam				
Bridge Length	Span No. 1 & No. 3	Span No. 2	Slab Thick-ness "T"	"X"	Haunch J10 (long.)	Bar Size	Span 1 & 3	Span 2	NEG	
							J8 bars	J9 bars	J11 bars	
feet					Bar		Length	Length	Length	
40	12'-0"	16'-0"	9½"	5'-0"	6	6	10'-8"	11'-9"	36'-0"	
45	13'-6"	18'-0"	10"	5'-0"	6	7	12'-0"	13'-0"	40'-0"	
50	15'-0"	20'-0"	10½"	5'-5"	6	7	13'-10"	15'-0"	42'-0"	
55	16'-6"	22'-0"	11"	5'-10"	6	7	15'-0"	19'-0"	45'-8"	
60	18'-0"	24'-0"	11½"	6'-3"	6	7	16'-6"	19'-3"	50'-0"	
65	19'-6"	26'-0"	11½"	6'-8"	6	8	17'-9"	21'-8"	28'-0"	
70	21'-0"	28'-0"	12"	7'-1"	6	8	18'-10"	22'-0"	27'-3"	
75	22'-6"	30'-0"	12½"	7'-6"	6	8	19'-10"	23'-0"	29'-3"	
80	24'-0"	32'-0"	13"	7'-11"	6	8	22'-8"	25'-0"	31'-3"	
85	25'-6"	34'-0"	13½"	8'-3"	6	8	23'-3"	27'-6"	33'-0"	
90	27'-0"	36'-0"	14"	8'-8"	6	8	25'-0"	28'-0"	35'-8"	
95	28'-6"	38'-0"	14½"	9'-6"	6	8	25'-0"	28'-0"	37'-11"	
100	30'-0"	40'-0"	15"	10'-0"	7	9	27'-3"	29'-10"	40'-6"	
105	31'-6"	42'-0"	15½"	10'-4"	7	9	28'-0"	32'-2"	41'-9"	
110	33'-0"	44'-0"	16"	11'-0"	7	9	29'-0"	32'-6"	42'-6"	
115	34'-6"	46'-0"	16½"	11'-4"	7	9	31'-0"	34'-0"	44'-7"	
120	36'-0"	48'-0"	17"	11'-9"	7	9	31'-3"	38'-0"	44'-9"	
125	37'-6"	50'-0"	17½"	12'-2"	7	9	31'-6"	39'-0"	46'-3"	
**130	39'-0"	52'-0"	18"	12'-6"	7	9	33'-9"	41'-0"	45'-4"	
**135	40'-6"	54'-0"	19"	12'-10"	7	9	35'-3"	42'-6"	44'-4"	
**140	42'-0"	56'-0"	19½"	13'-2"	7	9	36'-10"	44'-0"	45'-0"	

Slab Bridge Design Table																
Top of Slab – Negative Steel											Bottom of Slab – Positive Steel					
Bridge Length	@ Piers								Span 1&3	Span 2			Span 1 & 3		Span 2	
	Longitudinal		J5 Bars			J4 Bars			S510	S405	Longitudinal Bars		J3 Bars	J2 Bars	J6 Bars	J7 Bars
	Bar	Spacing	Length	L1	L3	Length	L2	L4	Length	Length	Bar	Spacing	Length	Length	Length	Length
40'	7	12"	11'-8"	5'-10"	5'-10"	19'-0"	10'-0"	9'-0"	5'-7"	0	6	10"	10'-8"	10'-8"	11'-9"	11'-9"
45'	7	12"	13'-0"	6'-6"	6'-6"	21'-0"	11'-0"	10'-0"	6'-1"	0	7	12"	12'-0"	12'-0"	13'-0"	13'-0"
50'	7	12"	15'-3"	7'-3"	8'-0"	22'-0"	11'-0"	11'-0"	7'-7"	0	7	12"	13'-10"	13'-10"	15'-0"	14'-2"
55'	7	12"	17'-0"	8'-6"	8'-6"	23'-10"	11'-10"	12'-0"	8'-3"	0	7	11"	15'-0"	15'-0"	19'-0"	14'-3"
60'	7	11"	17'-2"	8'-8"	8'-6"	26'-0"	13'-0"	13'-0"	8'-7"	0	7	11"	16'-6"	16'-6"	19'-3"	15'-1"
65'	7	11"	17'-6"	9'-0"	8'-6"	28'-0"	14'-0"	14'-0"	9'-1"	0	8	10"	17'-9"	16'-0"	21'-8"	15'-8"
70'	7	11"	18'-8"	9'-10"	8'-10"	27'-3"	14'-9"	12'-6"	9'-10"	8'-8"	8	10"	18'-10"	16'-6"	22'-0"	17'-5"
75'	7	11"	19'-7"	10'-9"	8'-10"	29'-3"	15'-9"	13'-6"	10'-4"	8'-8"	8	11"	19'-10"	18'-6"	23'-0"	18'-8"
80'	7	10"	20'-0"	11'-0"	9'-0"	31'-3"	16'-10"	14'-5"	10'-9"	8'-10"	8	11"	22'-8"	19'-6"	25'-0"	19'-6"
85'	7	10"	21'-6"	11'-8"	9'-10"	33'-0"	17'-6"	15'-6"	11'-7"	8'-8"	8	10"	23'-3"	20'-5"	27'-6"	20'-4"
90'	7	10"	24'-9"	13'-3"	11'-6"	35'-8"	19'-0"	16'-8"	11'-7"	8'-4"	8	10"	25'-0"	21'-6"	28'-0"	21'-6"
95'	7	10"	26'-6"	14'-0"	12'-6"	37'-11"	20'-0"	17'-11"	12'-1"	7'-10"	8	10"	25'-0"	22'-10"	28'-0"	21'-8"
100'	8	12"	27'-0"	14'-0"	13'-0"	40'-0"	21'-0"	19'-0"	12'-7"	7'-8"	9	12"	27'-3"	23'-6"	29'-10"	22'-9"
105'	8	12"	28'-2"	14'-6"	13'-8"	41'-9"	21'-9"	20'-0"	13'-4"	7'-8"	9	12"	28'-0"	24'-9"	32'-2"	24'-2"
110'	8	12"	29'-8"	15'-2"	14'-6"	42'-6"	22'-0"	20'-6"	14'-7"	8'-8"	9	11"	29'-0"	25'-10"	32'-6"	24'-9"
115'	8	11"	29'-3"	15'-0"	14'-3"	44'-7"	23'-10"	20'-9"	14'-3"	10'-4"	9	11"	31'-0"	27'-0"	34'-0"	26'-6"
120'	8	11"	29'-7"	15'-5"	14'-2"	44'-9"	24'-0"	20'-9"	15'-7"	12'-2"	9	11"	31'-3"	28'-8"	38'-0"	28'-8"
125'	8	10"	29'-8"	15'-5"	14'-3"	46'-3"	25'-0"	21'-3"	16'-1"	13'-2"	9	11"	32'-6"	29'-10"	39'-0"	29'-0"
**130'	9	10"	28'-10"	14'-6"	14'-4"	45'-4"	24'-4"	21'-0"	18'-3"	15'-8"	9	10"	33'-9"	30'-6"	41'-0"	31'-0"
**135'	9	10"	27'-9"	14'-6"	13'-3"	44'-4"	22'-10"	21'-6"	21'-3"	16'-8"	9	10"	35'-3	31'-2"	42'-6"	31'-0"
**140'	9	10"	28'-4"	15'-0"	13'-4"	45'-0"	23'-3"	21'-9"	22'-4"	18'-2"	9	10"	36'-10"	32'-3"	44'-0"	32'-7"

Note ** Spans over 50 foot require the shoring to be designed by a Professional Engineer.

SECTION 3.3: Prestressed Concrete Girders

3.3.1 – General Prestressed Girder Policy

Shapes

The precast concrete girder fabricators in the state of Nebraska have forms that match the dimensions of the NU and IT girders described later in this section. Due to increased fabrication and / or transportation costs stemming from using different shapes, it is highly recommended that designers use either the NU or IT girders for precast concrete girder design, even when widening existing structures (Designers should check deflections when widening with a different shape). The use of AASHTO Sections requires permission of the Bridge Engineer.

Materials

The following material criteria shall apply to all prestressed girder bridges.

Concrete

Designers shall minimize both release and 28-day strength to meet the maximum allowable stresses. Designers shall not exceed the 28-day concrete strength of 8000 psi without the Assistant Bridge Engineer approval.

Strands

- Two types of prestressing strands shall be used by the Bridge Division as follows:

  <u>NU Girders</u>
  Use 0.6 in., 7-wire uncoated low-relaxation strands (area = 0.217 in^2)

  <u>Inverted Tees</u>
  Use 0.5 in., 7-wire uncoated low-relaxation strands (area = 0.153 in^2)
- Strands shall conform to the requirements of ASTM A416/A416M, Grade 270.
- Restraint moments (AASHTO LRFD Bridge design Specifications, Section 5.14.1.4.2) do not need to be calculated if the prestressing strands (8 for NU girders, 4 for ITs) are extended and embedded into the diaphragm.
- Strands in the end regions of the girders may be debonded to control excessive stresses due to prestressing force.

Tensile Stress Limit in Prestressed Concrete at Service Limit States The Service III tensile stress in the bottom of the girder at the maximum positive moment location shall not exceed $0.095 \sqrt{f'c}$ without Assistant Bridge Engineer approval.

Non-prestressed Reinforcement

All non-prestressed reinforcement shall **not** be epoxy coated. Steel bars shall conform to the requirements of ASTM A615, Grade 60. Steel Welded Wire Reinforcement, deformed for concrete (previously referred to as welded wire fabric) shall conform to the requirements of ASTM A497 or AASHTO M221M / M221. Designers shall use a minimum yield strength of 70 ksi with a corresponding strain less than a maximum of 0.35%.

Debonded Strands

Debonding should be the last option for designers. Debonded Strands shall be specified by the Designer in accordance to AASHTO LRFD Bridge Design Specifications, Section 5.11.4.3. For prestressed I girders with straight strands only, additional U-shaped bars (G501) shall be added to girder ends to reduce the stresses due to lifting and handling of girders (see base sheets 6.34 through 6.46). Exterior and adjacent strands shall not be debonded.

Shear Reinforcement

Vertical web shear reinforcement shall be steel welded wire reinforcement, deformed for concrete, as shown on the Prestressed Girder Base Sheets. Anchorage zone reinforcement shall be able to resist at least 4 % of the total prestressing force and be placed within d / 4 of the end of the girder. A third vertical web shear reinforcement mat may be placed in the anchorage zone. Mild steel reinforcing substitution is discouraged. D25s are required in the end zones only for containing bursting forces. D18s are used elsewhere. Assistant Bridge Engineer approval would be required to use larger. The area of the longitudinal wire shall be at least 40 % of the vertical. Between the anchorage zones, the largest steel welded wire reinforcement, deformed for concrete shall be D18s for NU sections and D14s for IT sections.

Negative Moment Reinforcing Steel in Slab over Piers

Negative Moment Reinforcement shall be provided in the bridge deck taking into account deck longitudinal distribution reinforcement, by assuming 100% Live Load continuity at supports. Negative moment reinforcement shall be terminated in accordance with AASHTO LRFD Bridge Design Specifications.

Stay-in-Place Forms

Stay-in-Place metal forms are allowed, Designers shall apply to the girders an average load of 5.00 psf due to forms weight.

Camber

Camber is defined as the net result of upward deflection due to prestressing and downward deflection due to all dead loads. Camber and any correction for grade vertical curvature must be considered when determining girder seat elevations and concrete quantities. Bridge plans should indicate typical vertical dimensions from the top of the girder flange to grade at supports. Final deflection due to effective prestress plus dead loads shall be an upward camber. No downward camber at 30 days is permitted.

Camber shall not be considered in the vertical clearance determination under a bridge. For the purposes of determining the vertical clearances, the bottom of the girder shall be considered a straight line between the bearings.

Dead Load Deflections

All girder bridge plans shall have deflections calculated at the span tenth points and labeled, “Deflections for Shims”. Deflections for shims may assume a parabolic deflection curve and use the following factors to generate deflections.

10th pt deflection = (max. deflection) x Factor

Span 10th Pt	.0	.1	.2	.3	.4	.5	.6	.7	.8	.9	1.0
	.00	.36	.64	.84	.96	1.0	.96	.84	.64	.36	.00

Deflections for Shims Table in Prestressed Girder Base Sheet shall include deflection due to dead loads only (excluding future wearing surface).

Standard Notes

Standard Note # 332 must be included on the Front Sheet of the Bridge Plans. This note restricts the construction sequence of the superstructure based on the age of the girder.

Payment

All prestressed superstructure bridges will use the Pay Item, **“Precast/Prestressed Concrete Superstructure at Station _____”** (LS). This Item includes payment for reinforcing steel, prestressing tendons, and concrete.

FLEXURAL DESIGN OF PRESTRESSED CONCRETE BRIDGES POLICY

Prestressed concrete girders shall be designed according to the most recent AASHTO LRFD Bridge Design Specifications.

1. Alternate **Design at Prestress Transfer:**

    a. An alternate method of analysis for member capacity at prestress release can be the strength design method, as described in the final report by the University of Nebraska-Lincoln to NDOR, dated June, 2002, titled, “Compression Limits in Prestressed Concrete Members,” and the January/February 2001 PCI Journal paper titled, “Strength Design of Pretensioned Flexural Concrete Members at Prestress Transfer,” by Noppakunwijai, Tadros, Ma and Mast. The load factor applied to initial prestress shall be 1.15. The load factor applied to bending moments due to member weight shall be 1.15 if the moment is negative, e.g. at lifting points at time of lifting, and 0.85 if the moment is positive, e.g. at midspan and at transfer length point immediately at time of prestress transfer. The initial prestress just before release may be assumed 75% of the ultimate tensile strength for fully tensioned low relaxation strands.

    b. The required concrete compressive strength obtained from the analysis according to Section 1a shall not be less than 4500 psi, (to maintain a minimum quality of concrete and acceptable bond with up to 0.6 in. diameter strands).

    c. The incremental stress in the reinforcing steel caused by the combined factor axial load and bending moment due to prestress and self weight defined total stress from analysis according to Section 1a less initial prestress just before release, shall not exceed a tensile stress of 60 ksi. Alternatively, the top bonded tensile steel stress, according to a cracked section analysis for combined unfactored prestress plus member weight, shall not exceed 30 ksi.

    d. The top steel, stress at factored load levels using the analysis of Section 1a, shall not exceed the yield point of the steel grade used.

    e. Calculation of the required amount of top bonded tensile reinforcement on the basis of uncracked section analysis is no longer permitted.

2. Alternate **Design at Service:**

    a. An alternate method of analysis for member capacity at service can be the strength design method, as described in the final report by the University of Nebraska-Lincoln to NDOR, dated June, 2002, titled “Compression Limits in Prestressed Concrete Members,” and the November/December 2002 PCI Journal paper titled, “Elimination of Prestressed Concrete Compression Limits at Service Load,” by Noppakunwijai, Al-Omaishi, Tadros, and Krause.

b. Flexural strength shall be calculated using the strain compatibility procedure as described in Section 8.2.2.5 of the PCI Bridge Design Manual. Strength checks must include all loading combinations and the cross-section to which they apply. For cases for which no significant live load exists, LRFD Strength IV with a dead load factor of 1.5, rather than Strength I, may be the critical case.

c. For Service Load Limit State Analysis, limiting concrete compressive stress due to effective prestress plus dead load to $0.45f'_c$ is not required. Similarly, limiting concrete compressive stress due to effective prestress plus full loads to $0.60\ f'_c$ is not required.

d. For Service Load Limit State Analysis, concrete compressive stress due to 50% of effective prestress, 50% of dead load, plus 100% of live load shall be limited to $0.4f'_c$.

e. For Service Load Limit State Analysis, concrete tensile stress due to the loading combination given for Service III conditions in the bottom of the girder at the maximum positive moment location, shall be limited to $3\sqrt{f'_c}$.

f. Final deflection due to effective prestress plus dead loads shall be an upward camber. No downward camber at 30 days is permitted.

g. Live load deflection shall be limited to Span/800.

h. Maximum debonded length of strand shall be limited to Span/10.

3.3.2 – Prestressed I Shaped Girder Policy

General Design

The Nebraska University (NU) prestressed girder sections shall be used for all new prestressed I shaped girder designs.

NU Sections

The NU prestressed girder sections and properties are listed below.

Girder	Height in.	Web Width in	Top Flange in.	Bottom Flange in.	Area in^2	Yb in.	Inertia in^4	Weight Lb/Ft
NU 900	35.44	5.94	48.25	38.38	648.3	16.13	110,260	675.3
NU 1100	43.31	5.94	48.25	38.38	695.0	19.56	182,384	724.0
NU 1350	53.13	5.94	48.25	38.38	753.5	24.00	302,690	784.9
NU 1600	63.00	5.94	48.25	38.38	811.9	28.44	459,283	845.8
NU 1800	70.88	5.94	48.25	38.38	858.7	32.06	612,674	894.5
NU 2000	78.75	5.94	48.25	38.38	905.4	35.69	792,541	943.2

Composite Design

To allow for the loss of the wearing surface, the design slab thickness shall be ½ in. less than the actual bridge slab thickness when calculating the composite section in the positive moment regions. Composite properties and superimposed dead loads without any future wearing surface load, as shown on the Prestressed Girder Base Sheet, must be included in all Plans. The midspan composite section properties refer to the gross concrete area, including the effective transformed concrete area of the slab, but do not include the prestress strand or the slab reinforcement.

Girder Spacing

The maximum girder spacing for prestressed girders shall be 12 ft.

Bearing Design

Bearings designed for prestressed girders will use temperature ranges as stated in the Temperature Movement Policy and will include a calculated creep movement from 7 days to infinity (see Section 3.5.1).

Strands

The maximum number of strands for the NU bottom flange is 58 strands. Four additional top strands shall be tensioned to 2 kips/strand and shall not be accounted for in the design.

Strand Drape

The strand hold-down points shall normally be located at 0.4 and 0.6 points of the prestressed girder. However, quarter and third points are also acceptable. Consideration should be given to using only straight parallel strands on short prestressed girders < 50 ft. due to the high hold down force required.

NU Girder Haunch

A one inch minimum haunch at the CL of girder between the bottom of the bridge deck and top of girder at midspan is required in design. The 1 in. haunch is a construction tolerance that also facilitates future deck removal and must be used to calculate girder seat elevations only, and not used for calculation of composite section properties. During construction and redecking concrete girders (including AASHTO shapes) may be embedded up to 1" into the decks at a minimum number of locations.

Diaphragms

Intermediate diaphragms are not required on prestressed girder bridges except for the following:

- Spans greater than 160 feet shall have an intermediate diaphragm at midspan.

During construction, the lateral stability of the girders is critical, therefore; Standard Note # 333 must be included on the Front Sheet of the Bridge Plans. This note is a reminder that the Contractor is responsible for construction loading and conditions while the bridge is being built.

Diaphragms at the piers (or bents) shall require a mandatory construction joint at a point 2/3 of the girder height measured from the bottom of the girder. End diaphragms (slab turndowns) at abutments shall require a mandatory construction joint at bottom of the slab elevation.

Details for pier/bent diaphragm and slab turndown at abutment are shown on the following pages and can be used as detail guidelines. Details shown are the minimum reinforcement. Designers should calculate the required reinforcement on a case-by-case basis.

Payment

When intermediate diaphragms are specified for the NU girders, the Pay Item, **"Steel Diaphragm"** (EA), must be shown on the Plans. This item includes payment for furnishing and placement of the steel diaphragms.

Bridge Base Sheets

There is a base sheet reference file, see Section 6 (6.34 thru 6.39) for the NU girder sections. Designers must use the base sheet unless geometry or engineering judgment requires a change in the prestressed girder detailing.

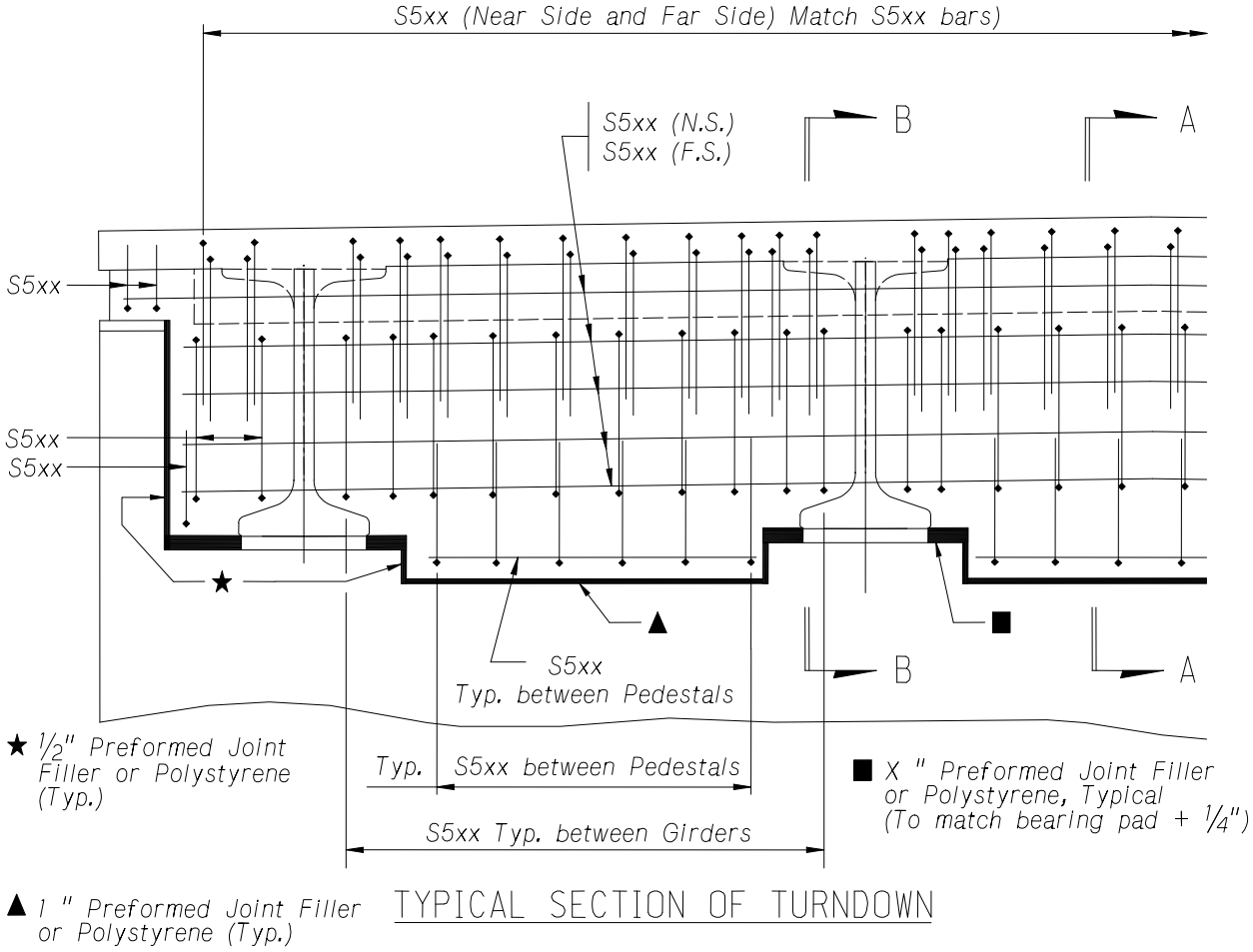

TYPICAL SECTION OF TURNDOWN

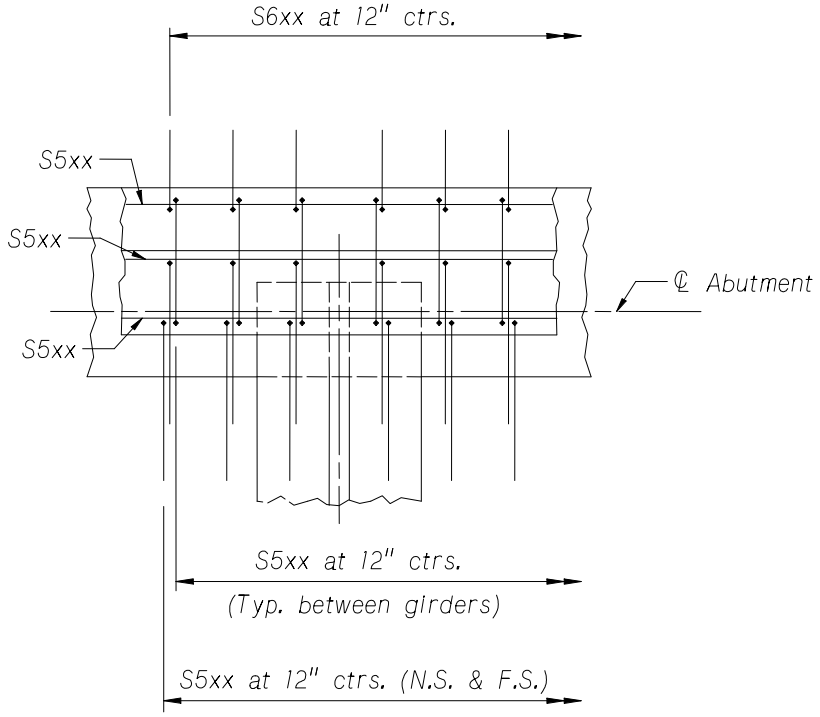

PARTIAL PLAN OF TURNDOWN

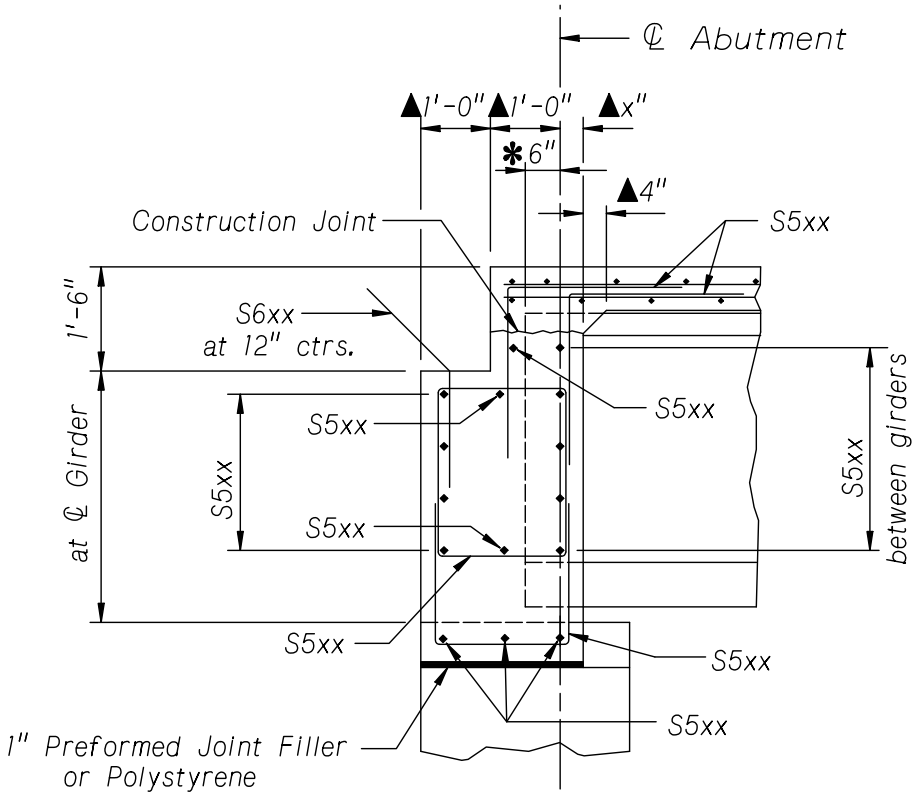

SECTION A-A

✱ Measured along ℄ of girder.
▲ Normal to ℄ Support

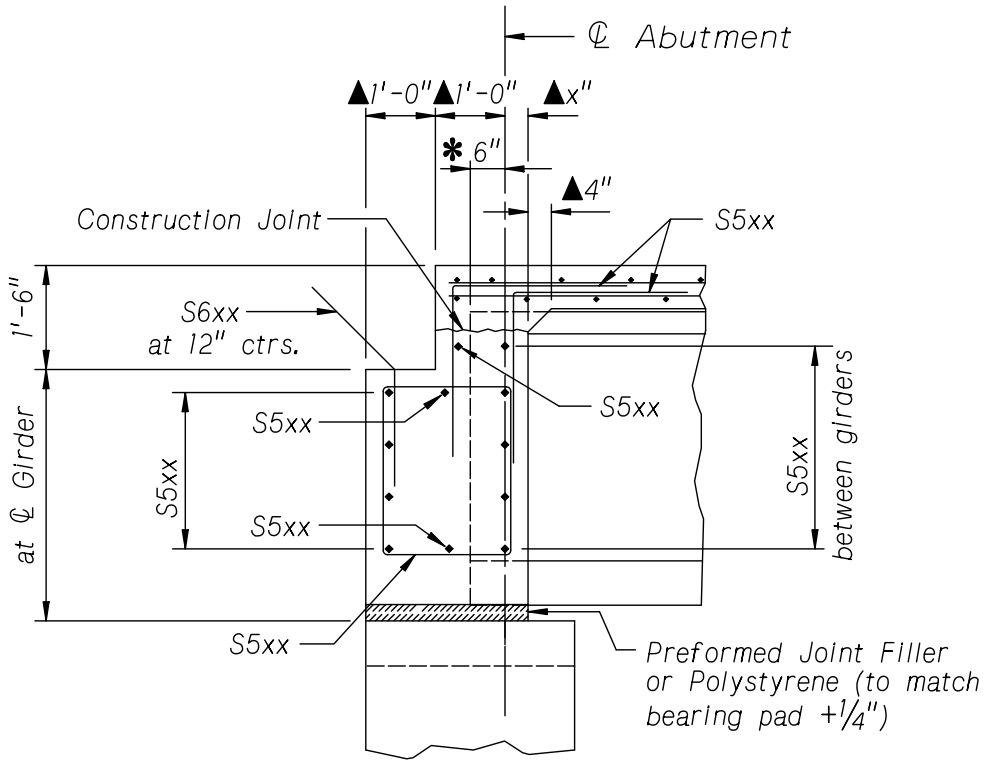

SECTION B-B

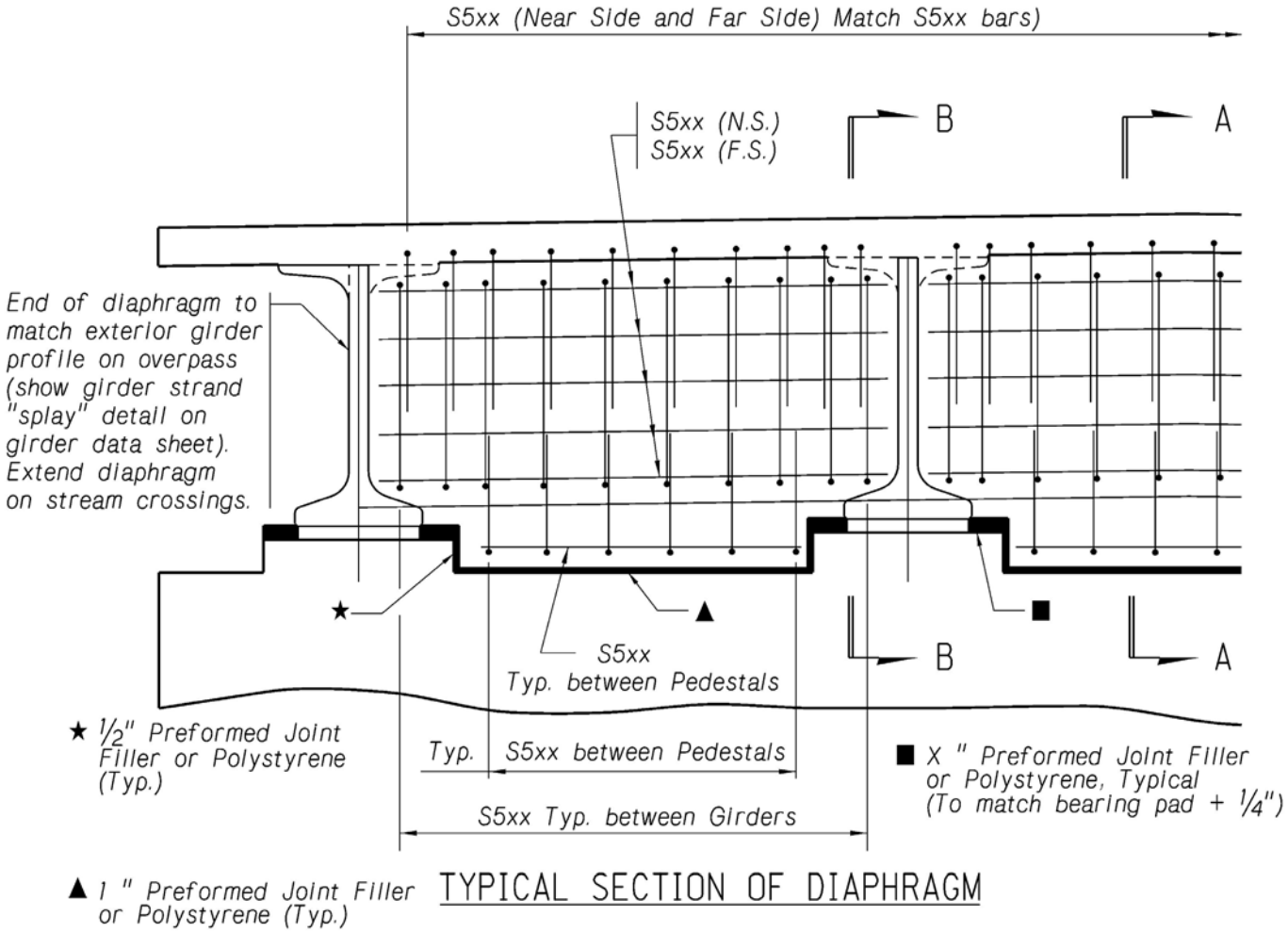

TYPICAL SECTION OF DIAPHRAGM

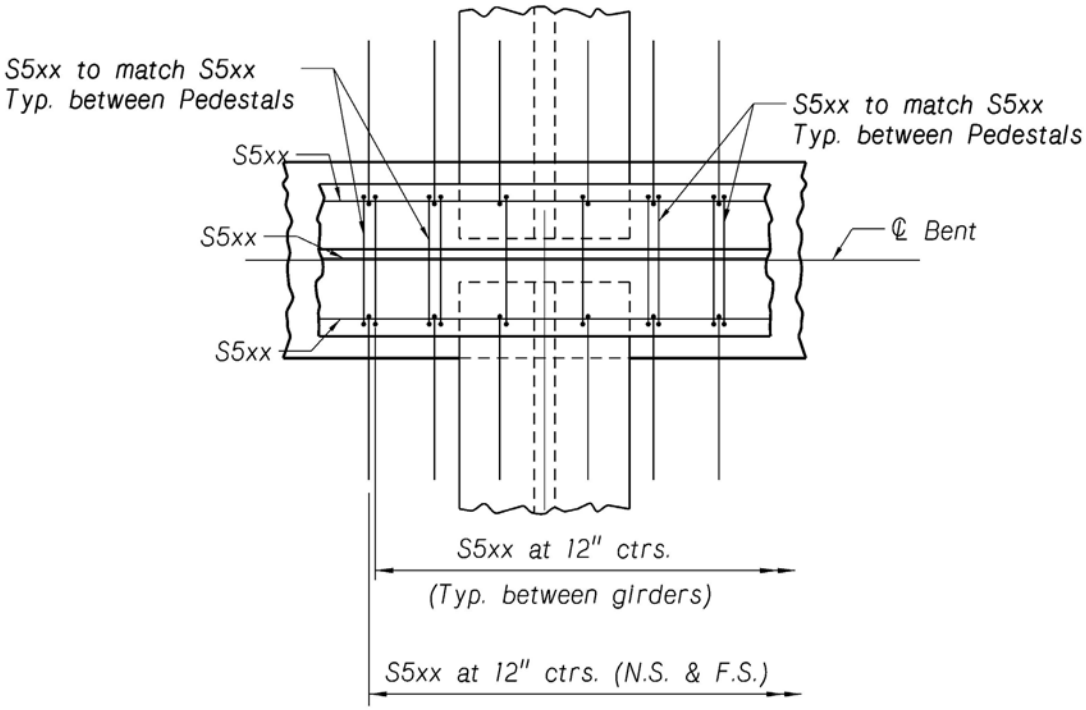

PARTIAL PLAN OF DIAPHRAGM

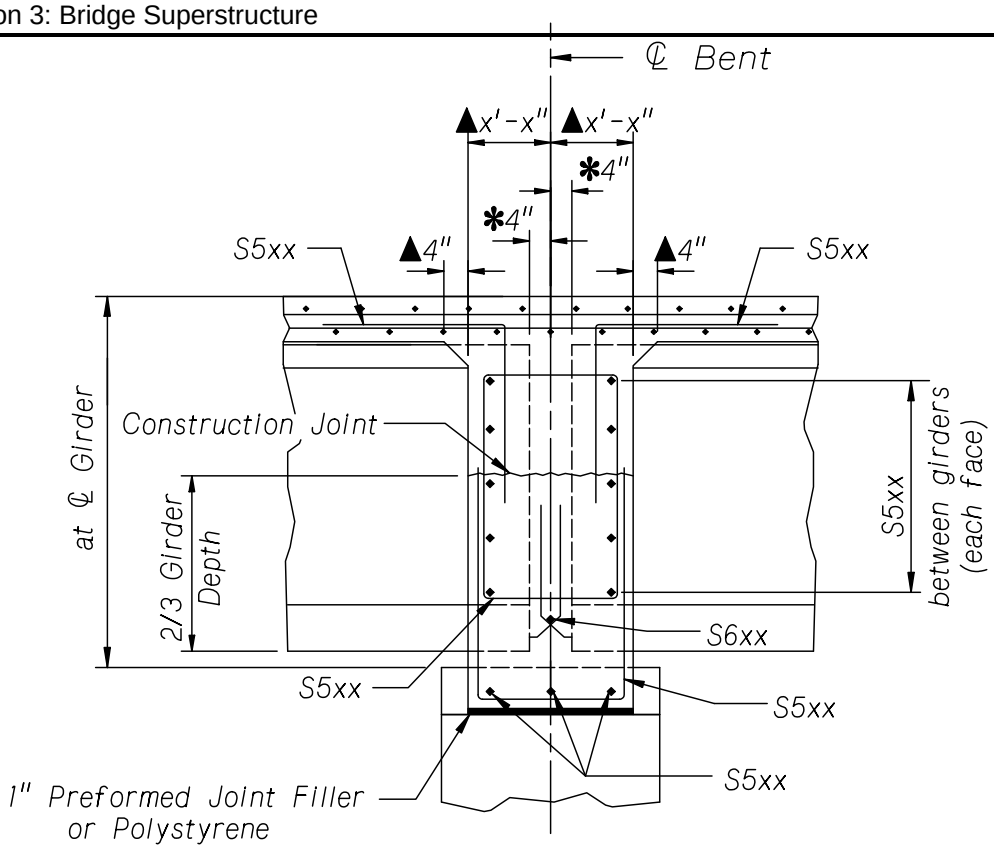

SECTION A-A

✱ Measured along ℄ of girder.
▲ Normal to ℄ Support

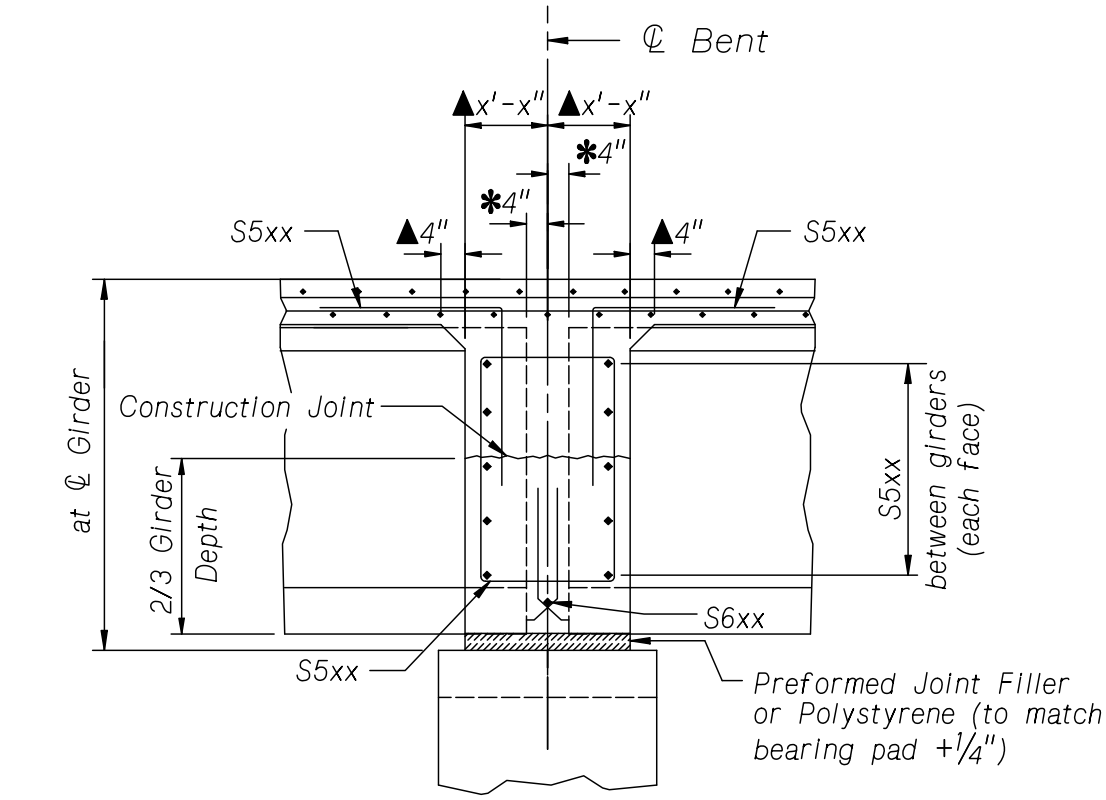

SECTION B-B

3.3.3 – Prestressed Inverted Tee Girder

General Design

The Nebraska University Inverted Tee (IT) prestressed girder sections can be used for short to medium span bridges with depth limitations and to replace deficient concrete slab bridges.

IT Sections

The most commonly used IT prestressed girder sections and properties are listed below.

- Depth is based on the actual geometry and includes a 1 ½ in. notch:

Girder	Height (in)	Web Width (in)	Flange Thickness (in)	Flange Width (in)	Area (in^2)	Centroid * (in)	Inertia (In^4)	Weight (Lb/ft)
IT 300	13.31	6.38	5.50	23.63	178.9	4.50	2,034	186.4
IT 400	17.25	6.38	5.50	23.63	204.0	5.81	4,468	212.5
IT 500	21.19	6.38	5.50	23.63	229.1	7.25	8,331	238.6
IT 600	25.13	6.38	5.50	23.63	254.2	8.75	13,866	264.8
IT 700	29.06	6.38	5.50	23.63	279.3	10.38	21,293	290.9
IT 800	33.00	6.38	5.50	23.63	304.4	12.06	30,827	317.1
IT 900	36.94	6.38	5.50	23.63	329.5	13.75	42,674	343.2

* Measured from the bottom of the girder

Composite Design

To allow for the loss of the wearing surface, the design slab thickness shall be 0.5 in. less than the actual bridge slab thickness when calculating the composite section in the positive moment regions. Composite properties and superimposed dead loads without any future wearing surface load, as shown on the Prestressed Girder Base Sheet must be included in all Plans. The midspan composite section properties refer to the gross concrete area including the effective transformed concrete area of the slab, but do not include the prestressing strands or the slab reinforcement.

Girder Spacing

The maximum girder spacing for the Inverted Tee prestressed girders shall be 37 in.

Distribution of Loads

For prestressed Inverted Tee girders, the distribution factors of live load per lane shall be S/11 for moment and S/5.5 for shear, where S is the beam spacing in feet. These factors are based on research done by the University of Nebraska.

Bridge Deck

Cast-in-place slab thickness is 6 in. Slab reinforcement is a single layer of reinforcement at mid slab thickness. Use # 5 bars @ 6 in. centers for transverse reinforcement and # 5 bars @ 10 in. centers for longitudinal reinforcement. Additional reinforcement shall be provided in the slab on structures continuous over the piers. The maximum overhang length measured from the centerline of the exterior girder shall be 19 in. No additional reinforcing is required in the cantilever and the 6 in. slab thickness shall be maintained. Slab concrete compressive strength is 4000 psi. Up to the maximum girder spacing slab thickness shall be 8 in. on the Interstate (or with 42” NU rail) with # 5 bars transversely and # 4 bars longitudinally spaced at 12” centers in the bottom mat and # 5 bars transversely and # 4 bars longitudinally spaced at 9” centers in the top mat. Cantilever reinforcing per Section 3.1.1.

Bearing Design

SBS Modified Asphalt Base Sheet(s) may be used. Designers should consider using unreinforced elastomeric pads when the slope at the bearing would exceed 1% and unreinforced elastomeric pads and / or a 4” chamfer when the slope or skew might cause the girder to bear on the face of the substructure.

Strands

The maximum number of strands for the Inverted Tee bottom flange is 22 strands. Two additional top strands shall be tensioned to 2 kips/strand and shall not be accounted for in the design. All strands have a straight profile. With the permission of the Assistant Bridge Engineer, the top two strands can be tensioned up to 75% (but should not be cut) and / or the number of debonded strands increased beyond the AASHTO 25 / 40 % limits (an increase of less than 10% is recommended).

Intermediate Diaphragms

Intermediate diaphragms are required for the Inverted Tee girder bridges. A minimum of one diaphragm at midspan between the three outside girders is required.

Bridge Base Sheet

There is a base sheet reference file for the Inverted Tee sections in Section 6 (6.40 thru 6.46).

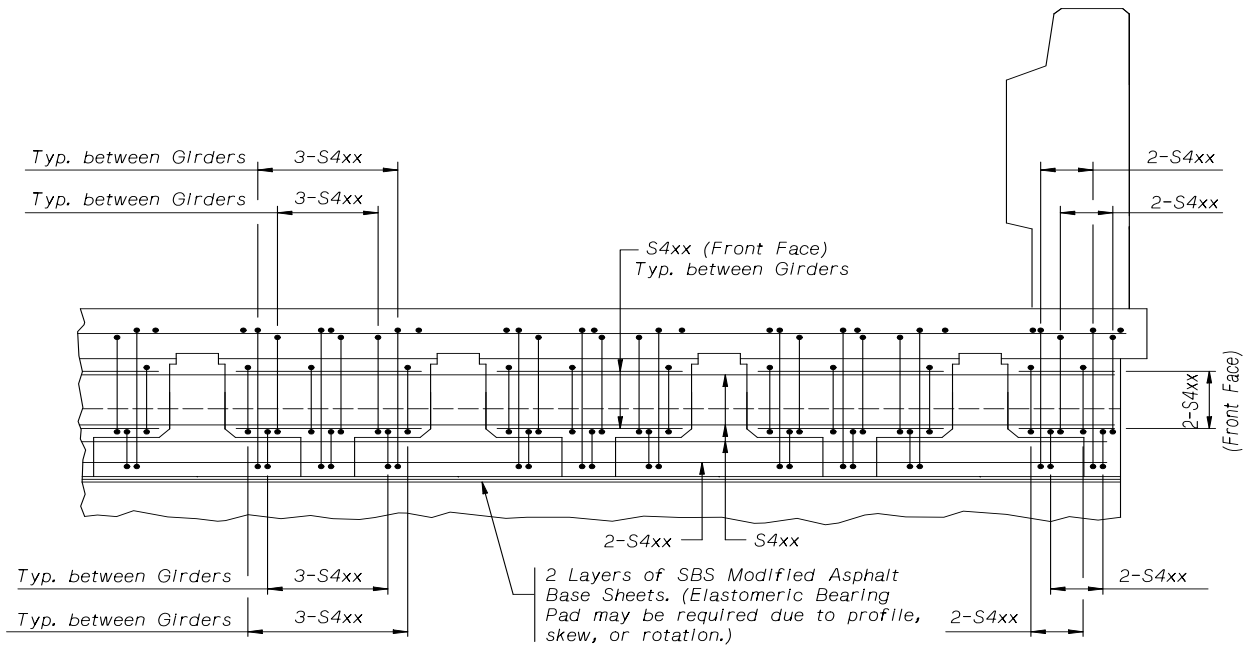

TYPICAL SECTION OF TURNDOWN

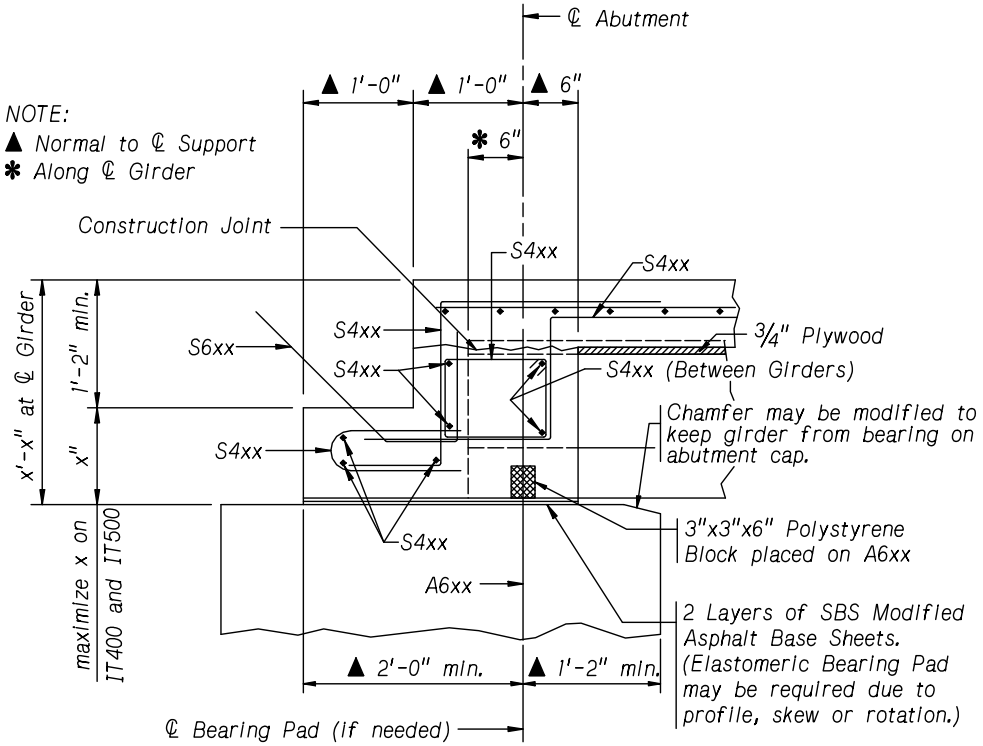

SECTION OF TURNDOWN AT ABUTMENTS

Shall be used on IT500 thru IT900. May be used on IT400.

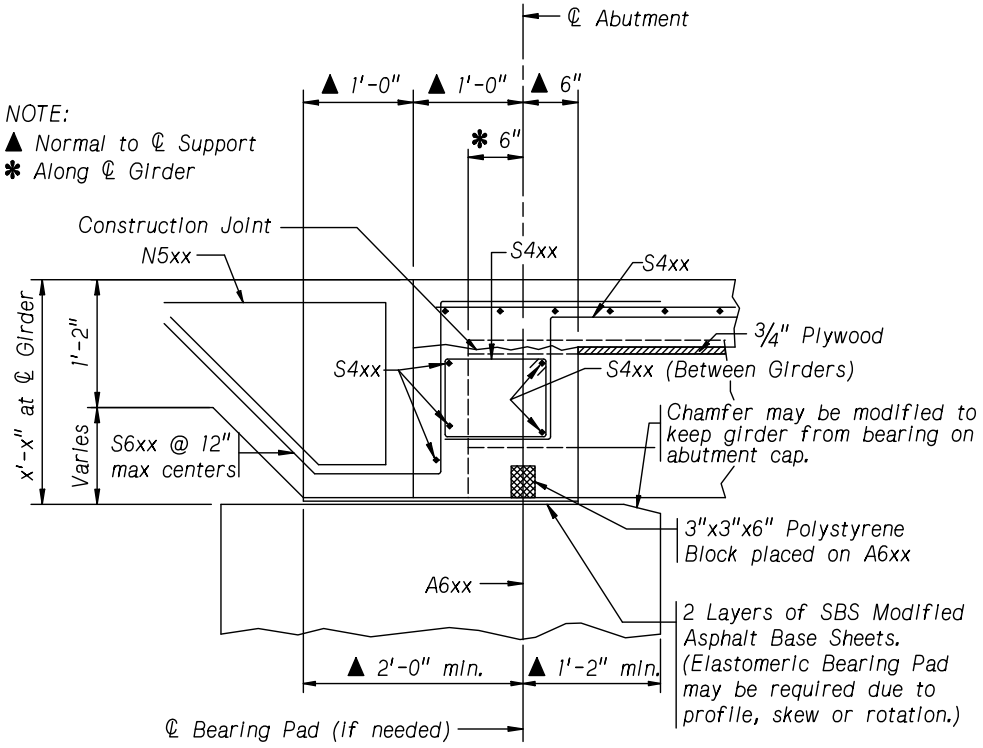

SECTION OF TURNDOWN AT ABUTMENTS

Shall be used on IT300. May be used on IT400.

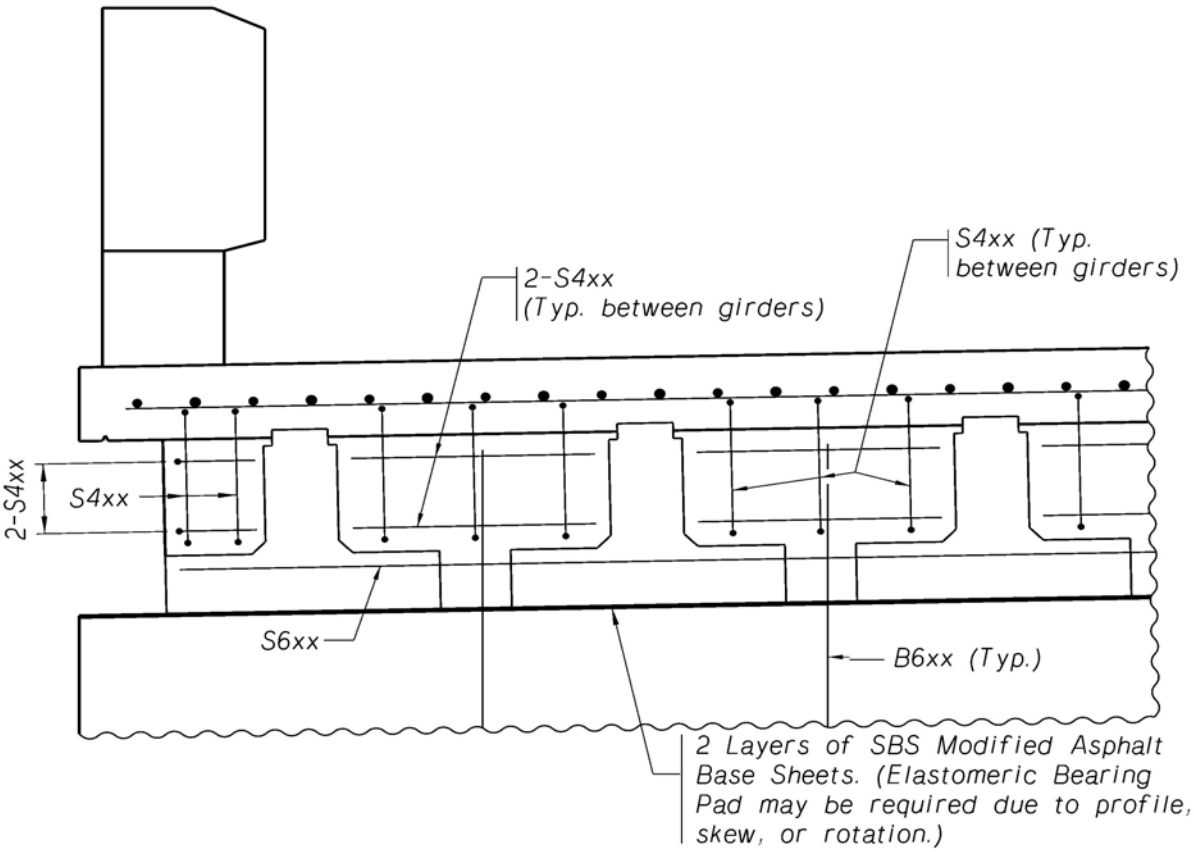

TYPICAL SECTION OF DIAPHRAGM

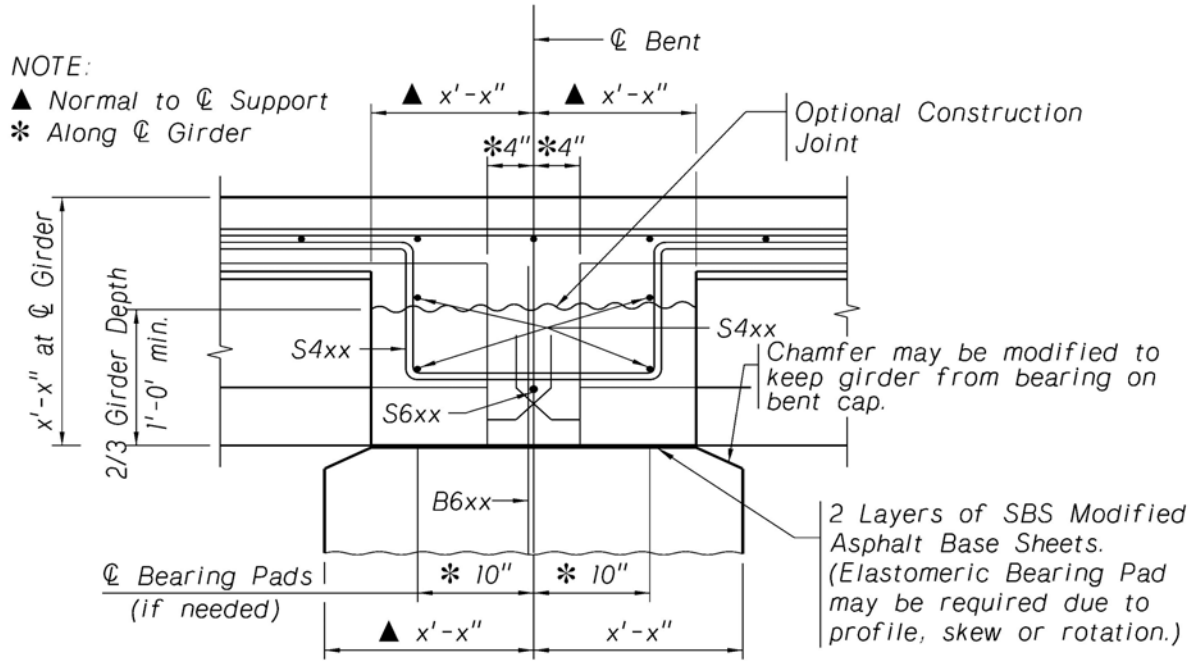

SECTION OF DIAPHRAGM AT BENTS

3.3.4 – Post-Tensioned I Shaped Girder Policy

General Design Criteria

- The Nebraska University (NU) post-tensioned girder sections shall be used for all new post-tensioned I shaped girder designs.

NU Sections

The NU post-tensioned girder sections and properties are listed below.

Girder	Height (in.)	Web Width in.	Top Flange in.	Bottom Flange in.^{2}	Area in.^{2}	Yb in.	Inertia in^4	Weight Lb./ft
NU 1100P	43.31	6.88	49.19	39.38	737.2	19.69	189,224	767.9
NU 1350P	53.13	6.88	49.19	39.38	805.0	24.13	315,311	838.6
NU 1600P	63.00	6.88	49.19	39.38	872.8	28.63	480,225	909.2
NU 1800P	70.88	6.88	49.19	39.38	927.1	32.31	642,403	965.7
NU 2000P	78.75	6.88	49.19	39.38	981.3	36.00	833,189	1022.2

- The maximum girder spacing for post-tensioned girders shall be 12 ft.
- Typically, the maximum number of pre-tensioned (prestressed) strands in the bottom flange is 46.
- Pre-tensioned (prestressed) strands shall be provided to resist girder self weight and construction loads (see Prestressed Girder Policy).
- The Bridge Division Policy is to apply post-tensioning in one stage before casting the deck.
- All Prestressed, Post-Tensioned girders shall conform to the requirements of Section 705 of the Standard Specifications.
- Construction Sequence item under post-tensioning notes (see base sheet) should describe girder erection and post-tensioning procedure during construction. Designers shall determine and include the required steps on the base sheet of the bridge plans.
- Camber due to post-tensioning must be considered when calculating girder seat elevations.

Anchorage (End) Block

The Bridge Division policy is to use the anchorage block developed by University of Nebraska in all post-tensioned girder bridges. The Anchorage block will accommodate up to three tendons with fifteen 0.6 in.-strands each. The standard post-tensioning anchorage zone dimensions and reinforcing details for all NU I girder sizes are shown in the following details.

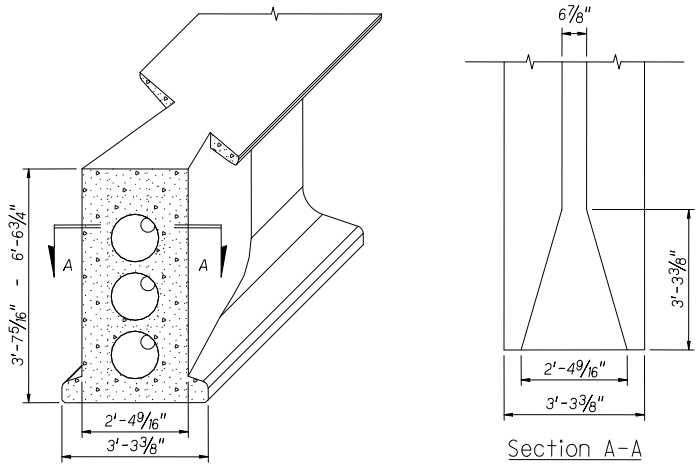

Standard NU I-Girder Post-Tensioning Anchorage Block

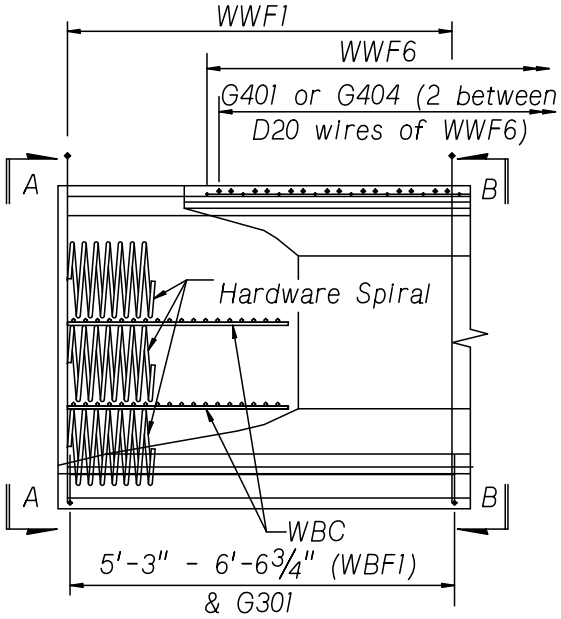

GIRDER ELEVATION

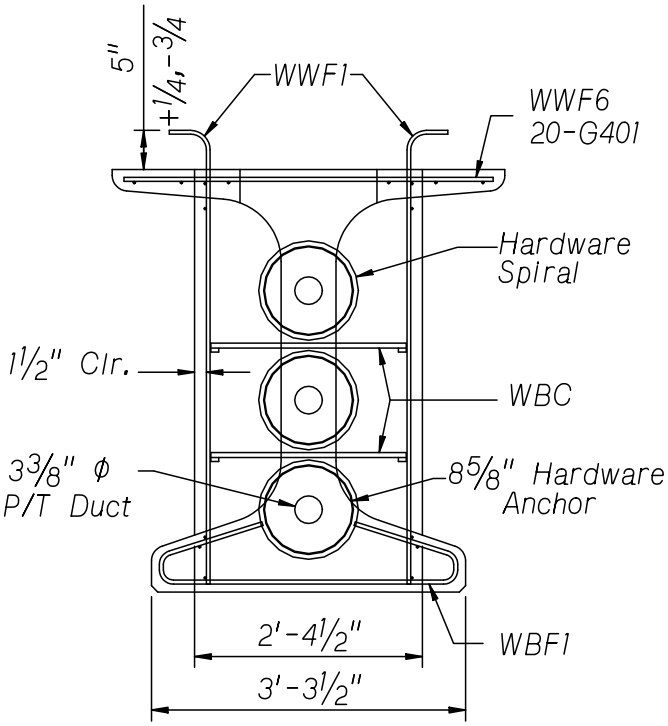

SECTION A-A

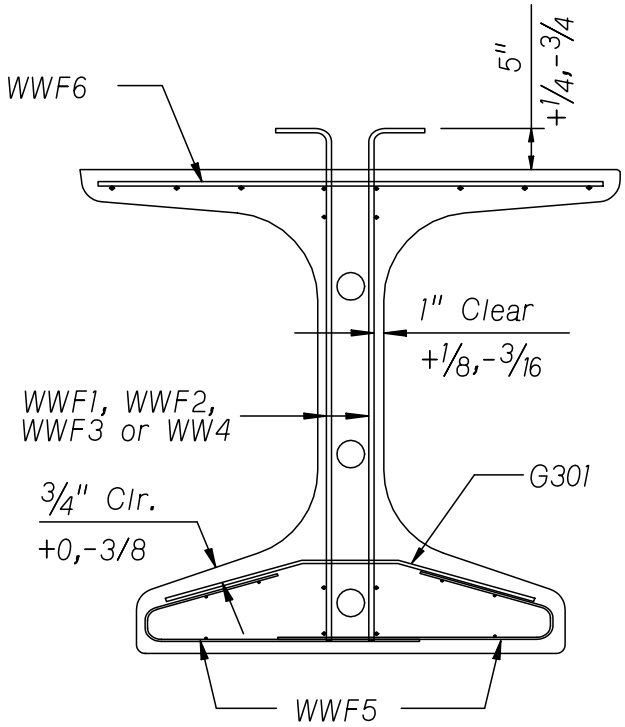

SECTION B-B

Standard Post-Tensioning Anchorage Zone Reinforcement

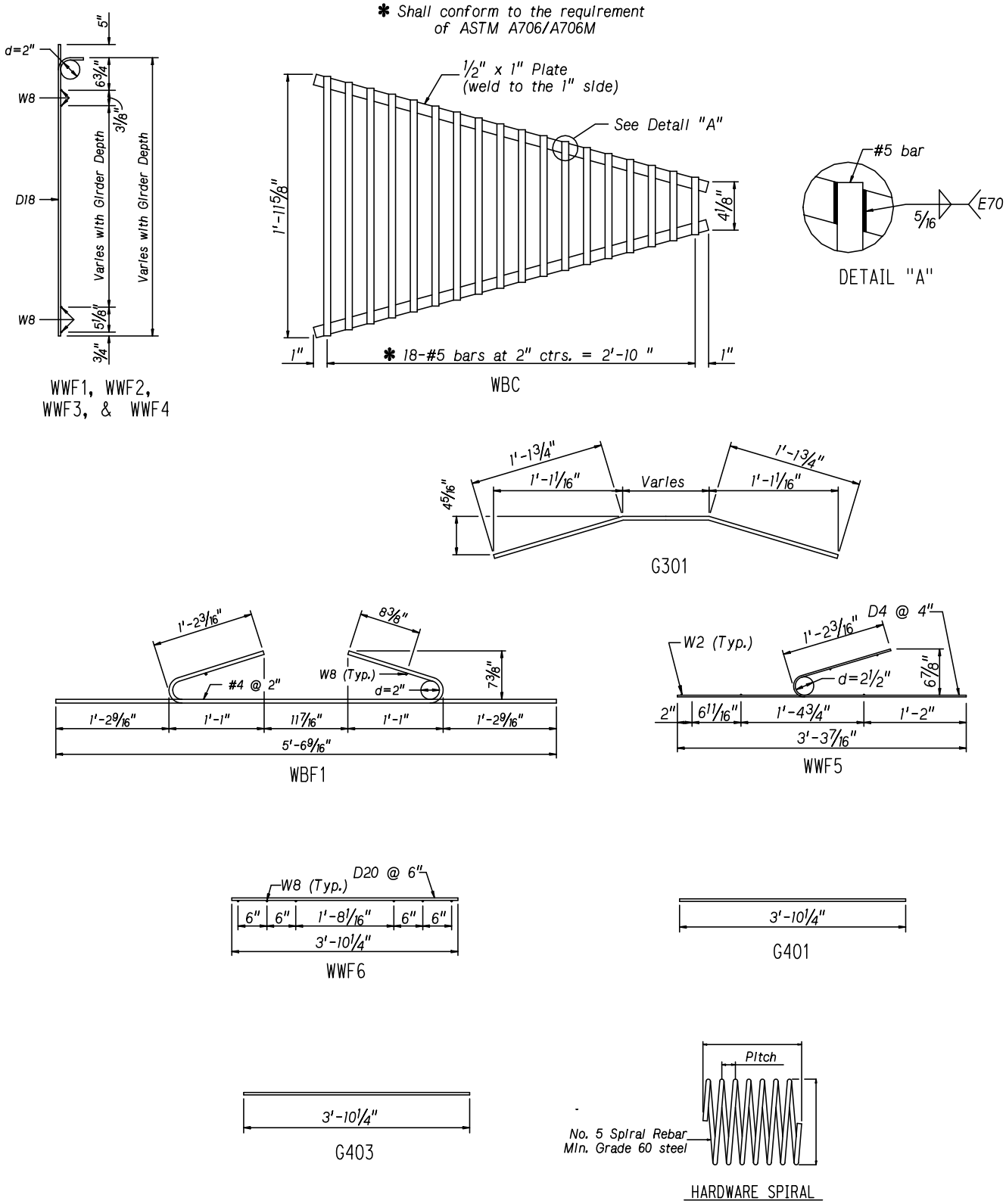

Standard Post-Tensioning Anchorage Zone Reinforcement

Action	Girder Size	Provided Reinforcement	
		Area (in^2)	Distance (in)
Transverse Bursting* (WWF1)	NU1100P	11.34	63.0
	NU1350P	11.34	63.0
	NU1600P	11.34	63.0
	NU1800P	12.76	70.9
	NU2000P	14.17	78.7
Top Flange Bursting in Thin Direction (WWF6)	NU1100P	6.30	63.0
	NU1350P	6.30	63.0
	NU1600P	6.30	63.0
	NU1800P	7.09	70.9
	NU2000P	7.87	78.7
Web Bursting in Thin Direction (WBC)	NU1100P	10.97	35.4
	NU1350P	10.97	35.4
	NU1600P	10.97	35.4
	NU1800P	10.97	35.4
	NU2000P	10.97	35.4
Bottom Bursting in Thin Direction (WBF1)	NU1100P	6.30	63.0
	NU1350P	6.30	63.0
	NU1600P	6.30	63.0
	NU1800P	7.09	70.9
	NU2000P	7.87	78.7
Note: Reinforcement was designed to resist post-tensioning in combination with vertical shear.			

Post-tensioning Anchorage Reinforcement for NU I-Girders

Tendons

A maximum number of three tendons can be used for the design of NU post-tensioned girders (see Anchorage Block details). Each tendon has a maximum of 15 - 0.6-inch diameter, low relaxation strands with ultimate strength of 270 ksi and modulus of elasticity 28,500 ksi. The tendons will be threaded through the ducts which were installed during the girder fabrication. Positions, clear spacings and minimum concrete covers for post-tensioned ducts are shown in NU Post-tensioned Girders Base Sheets (see Section 6 6.47 thru 6.49).

Tendons Profile

The post-tensioning profile for tendons will typically have a parabolic shape, this is the most efficient tendon profile from the standpoint of steel stress loss.

NU Girder Haunch

One inch minimum haunch at CL girder between the bottom of the bridge deck and top of girder at midspan is required. The 1 in. haunch is a construction tolerance and must be used to calculate girder seat elevations only. It must not be used for calculation of composite section properties.

Standard Notes

Standard Notes # 336 and # 338 must be included on the Front Sheet of the Bridge Plans.

Payment for Post-Tensioning

All Post-Tensioned superstructure bridges will be measured for payment by the lump sum using the following Pay Item:

"Precast-Prestressed/Post-Tensioned Concrete Superstructure at Station ____" (LS)

This Pay Item is considered full compensation for furnishing all components of the precast-prestressed/post-tensioned superstructure including the cost of prestressing, precasting, and post-tensioning.

Diaphragms

Intermediate diaphragms will not be required on post-tensioned girder bridges with up to 150 ft. spans, additional tests or structural analysis will be required for longer spans.

End diaphragms (slab turndowns) at abutments and diaphragms at the piers (or bents) shall require a mandatory construction joint at the bottom of the slab.

Lateral Stability

During construction, the lateral stability of the girders is critical, therefore, Standard Note # 337 must be included on the Front Sheet of the Bridge Plans. This note is a reminder that the Contractor is responsible for construction loading and conditions while the bridge is being built.

Payment for Intermediate Diaphragms

When intermediate diaphragms are specified for the NU girders, the Pay Item **"Steel Diaphragms"** (EA) must be shown on the Plans. This Item includes payment for furnishing and placement of the steel diaphragms.

Bearing Design

Bearings for post-tensioned girders shall be designed according to Section 3.5.1, taking into account the elastic shortening due to post-tensioning.

Bridge Base Sheets

There is a Base Sheet Reference File, see Section 6 (6.47 thru 6.49), for the NU Post-Tensioned girder sections. Designers must use the base sheet unless geometry, design, or engineering judgment requires a change in the Post-Tensioned girder detailing.

SECTION 3.4: Steel Girder Design

3.4.1 – General Steel Girder Design Policy

General Girder Design Criteria

- All steel girders shall be weathering steel.
- All multiple span steel girder bridges will be designed as continuous structures.
- Preliminary design of steel superstructures should investigate the following sections in this order based on cost:
  - Compact rolled sections.
  - Combination of welded plate girder for main spans and rolled sections for the short spans.
  - Welded plate girders.
  - Hybrid welded plate girders.
- The maximum girder spacing for all steel girders shall be 12 ft.
- Bridge members that qualify as Fracture Critical Members (FCM) are required to be identified in the Plans as fracture critical. FCM is a component in tension whose failure is expected to result in the collapse of the bridge or the inability of the bridge to perform its function.
- Form hanger tack welding of any kind is prohibited in the NDOR Standard Specifications. Therefore, all steel girder plans must include Standard Note # 152 as a reminder to the Contractor.
- Contractors need to be aware of the effect of torsion on the exterior girders caused by the eccentric loading of the overhang form brackets at the time of placing the slab concrete. Therefore, Standard Note # 155 must be included on the Front Sheet of the Bridge Plans.
- Designers shall use slab turndown details on the following pages as guidelines.

Stay-in-Place Forms

Stay-in-Place metal forms are allowed, Designers shall apply to the girders an average load of 5.0 psf due to forms weight.

Field Sections

In general, field sections for steel girders may be up to 120 ft. long for rolled beams and up to 150 ft. long for plate girders and weigh up to 60 kips. Site conditions and the location of the project may reduce these maximum limits. Designers should check with local fabricators when considering designs approaching these maximum limits.

Composite Design

All steel girder bridges will be designed as composite structures.

Fatigue Resistance

When using Fatigue II load combinations the nominal fatigue resistance $(\Delta F)n = (A/N)^{(1/3)}$ is still $>= 1/2\ (\Delta F)_{TH}$.

Shear Connectors

End welded stud shear connectors shall be 7/8 in. diameter and meet the requirements of the current AASHTO LRFD Bridge Design Specifications. The Shear Connector Detail shown, (AC=SHEAR1) will be provided on all Plans.

Stud Diameter inch	Weight (Lb) of 100 studs having in-place length of				
	3 in.	4 in.	5 in.	6 in.	7 in.
1/2	21.0	27.0	33.0	39.0	45.0
5/8	33.6	43.2	52.8	62.4	72.0
3/4	49.0	61.5	74.0	86.5	99.0
7/8	64.0	81.0	98.0	1150	132.0

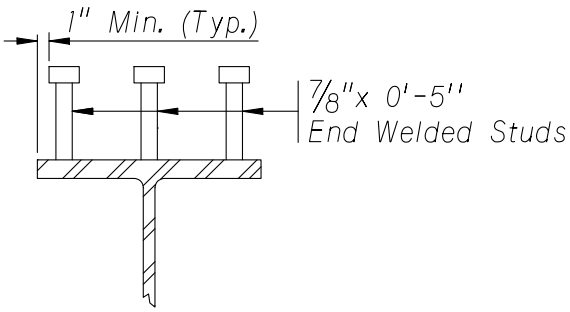

SHEAR CONNECTOR DETAIL

When Shear Connectors (Studs) are field applied, the following notes shall apply:

The Bridge Office shall be notified a minimum of one week prior to the application of the field welded studs.

Stud welding shall be accomplished in accordance with the AWS D1.5 Standard Specifications, Section 7.

All stud welding shall be done by a certified stud welder. At the time of stud welding, the studs and base metal shall be free from rust, rust pits, scale, oil, moisture, falling rain or snow, and any other foreign material. Areas must be wire brushed or cleaned by grinding before any welding can occur.

Any studs that do not exhibit a 360° collar must be repaired by a SMAW fillet weld (E8018-C3 Electrode) and the repair shall extend 3/8" beyond each end of the missing collar.

Mill Certification for the studs shall be submitted to the Engineer.

AC=SHEAR1

Positive Moment Regions

The actual bridge deck thickness will be reduced ½ in. for the composite design to account for the wearing surface.

Negative Moment Regions

Only the slab reinforcement will be considered to act compositely with the steel beams in calculating the resisting moments.

Charpy V-Notch

Required Testing

The following members in a steel girder bridge shall be considered as a main tension member and, therefore, require Charpy V-Notch testing.

1. All rolled beams used as girders or as primary stress-carrying members.
2. All flange plates of a welded plate girder in a tension zone.
3. All web plates.
4. All field splice plates.

Plan Detailing

Steel girder layouts will indicate the compression and tension zones for the purpose of Charpy V-Notch testing. The following CAD cells must be shown on the plans as required.

CHARPY IMPACT TEST REQUIREMENTS FOR MAIN TENSION MEMBERS
For the purpose of impact test the following material shall be classified as main tension members: All flange plates marked thus • All web plates All field splice plates

AC=CHARP1

CHARPY IMPACT TEST REQUIREMENTS FOR MAIN TENSION MEMBERS
For the purpose of impact test the following material shall be classified as main tension members: All girders All field splice plates

AC=CHARP2

Stiffener Welds

Welds must terminate 1/4” from the end of the welded plate to avoid fatigue problems at th stiffeners; see Separator Policy. The CAD cell AC=STIFWD will be placed in all steel girder Plans.

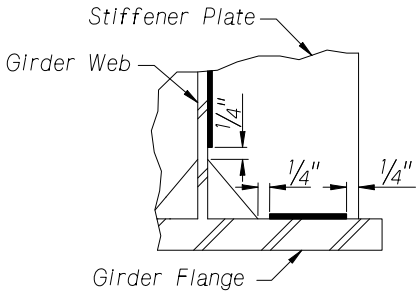

TYPICAL STIFFENER WELD DETAIL

AC=STIFWD

Intermediate Stiffeners

The CAD cell AC=STIFIN should be used to indicate intermediate stiffener attachment to the girder. Compression and tension flange zones must be shown on the girder sheets. Single sided stiffeners on horizontally curved girders should be attached to both flanges per AASHTO LRFD Bridge Design Specifications 6.10.11.1.1.

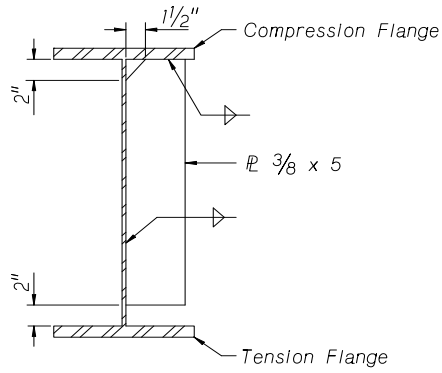

INTERMEDIATE STIFFENERS

AC=STIFIN

Weathering Steel Drip Plates

The cell AC=DRIPPL will be used to specify drip plates for all weathering steel girders. Drip plates should be 6 ft. - 6 in. away from the CL supports to avoid staining the pier or abutment concrete.

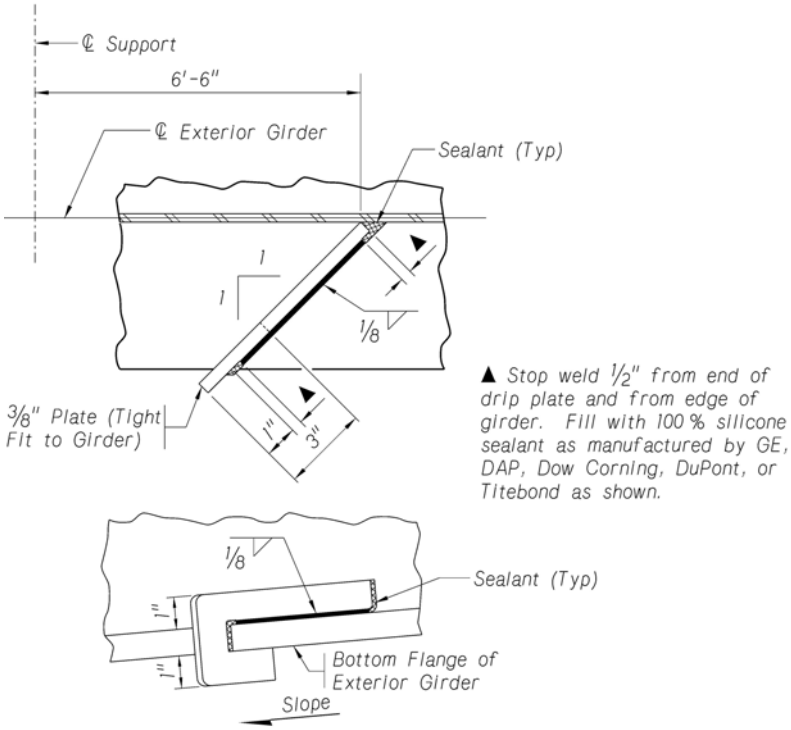

TYPICAL DRIP PLATE DETAIL
FOR EXTERIOR GIRDERS

Not to Scale

AC=DRIPPL

Payment

New steel for superstructures must use the standard Pay Item, **"Steel Superstructure at Station _____"** (LS). Steel for widened or rehabilitated structures should use the standard Pay Item, **"Structural Steel for Superstructure"** (LB.). As long as shear connectors are required to be installed in the field, their weight should be shown as a subitem.

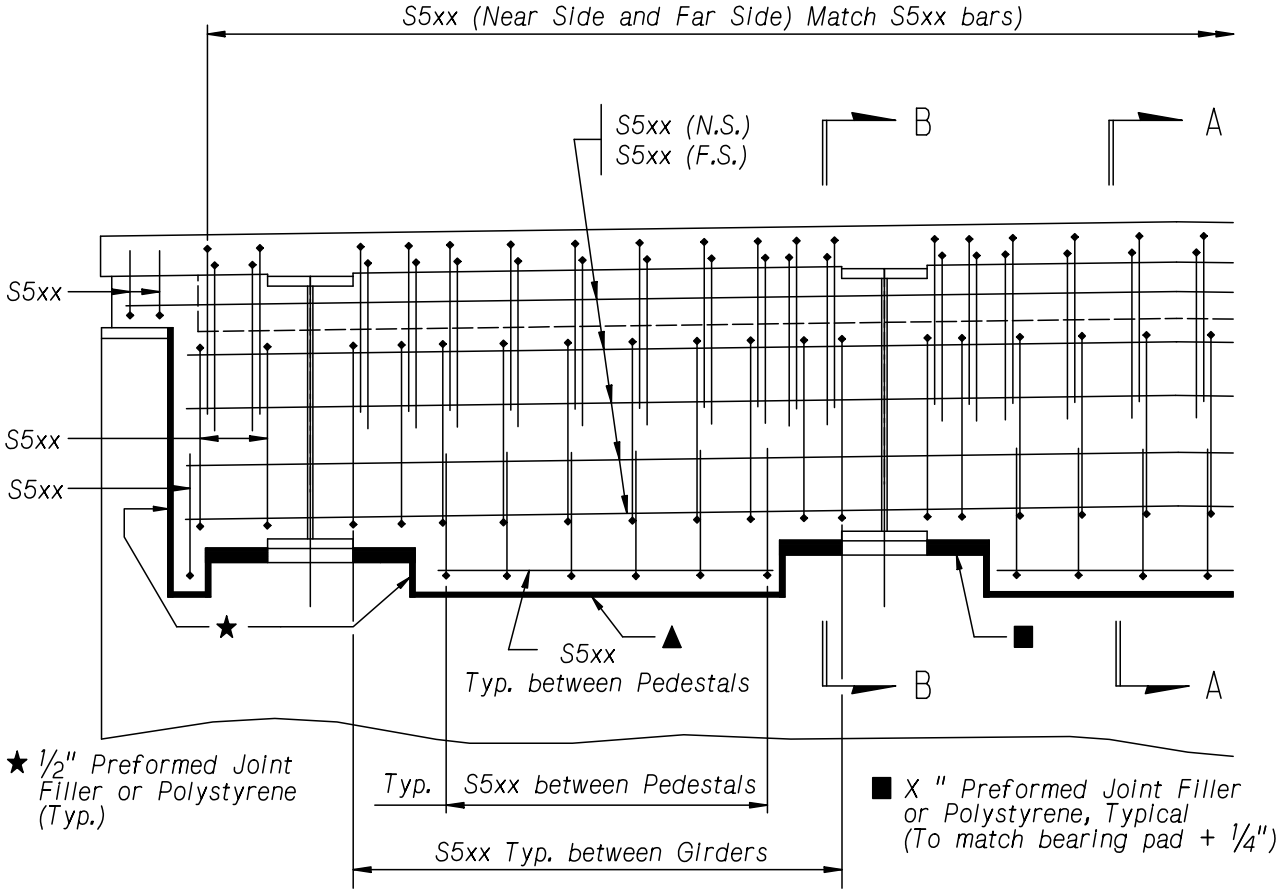

TYPICAL SECTION OF TURNDOWN

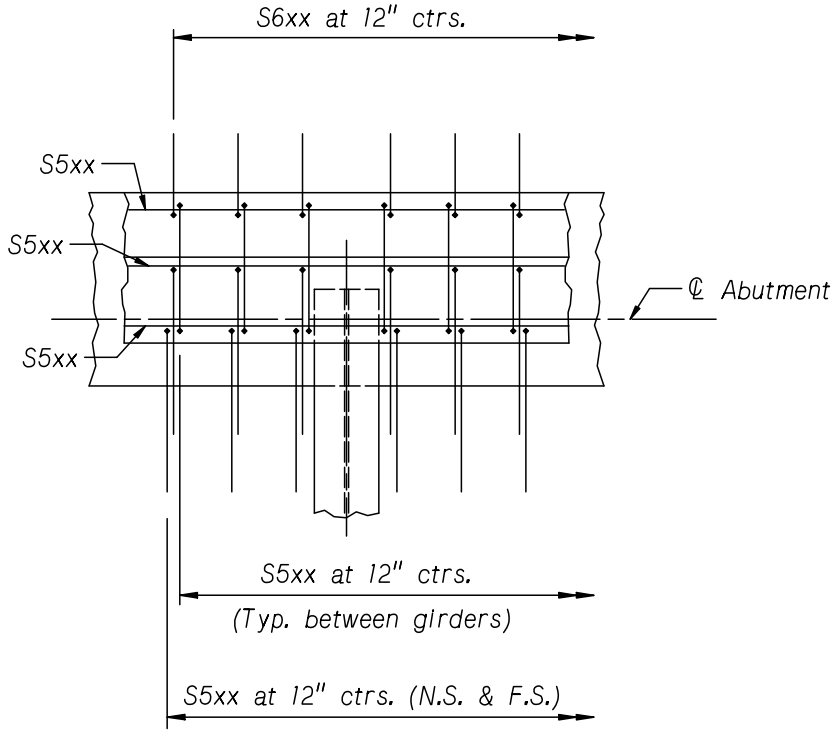

PARTIAL PLAN OF TURNDOWN

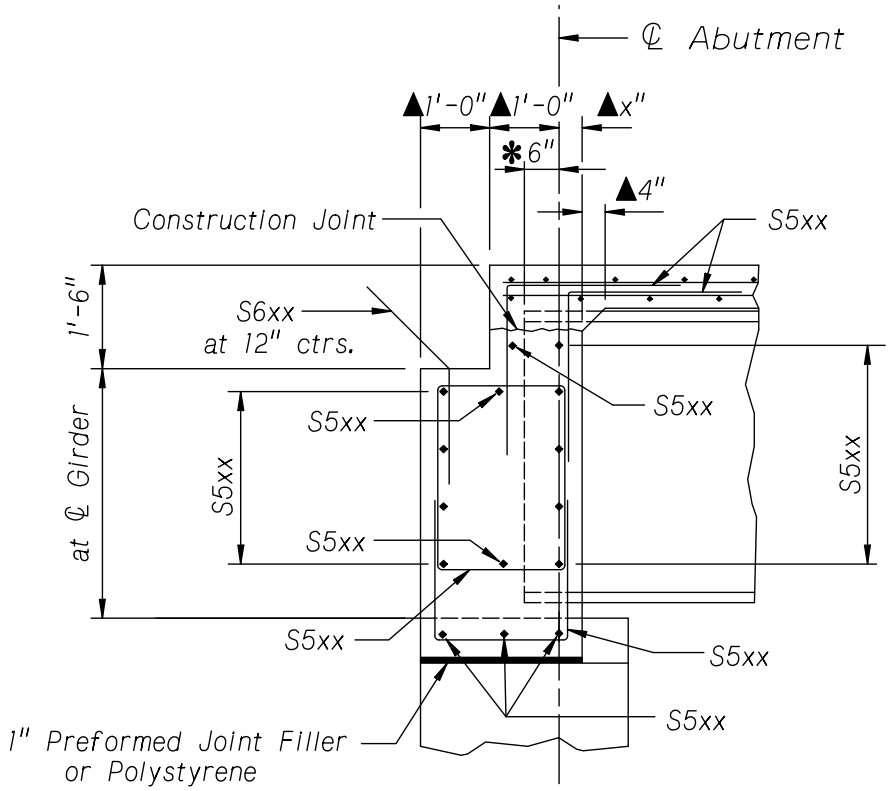

SECTION A-A

✱ Measured along ℄ of girder.
▲ Normal to ℄ Support

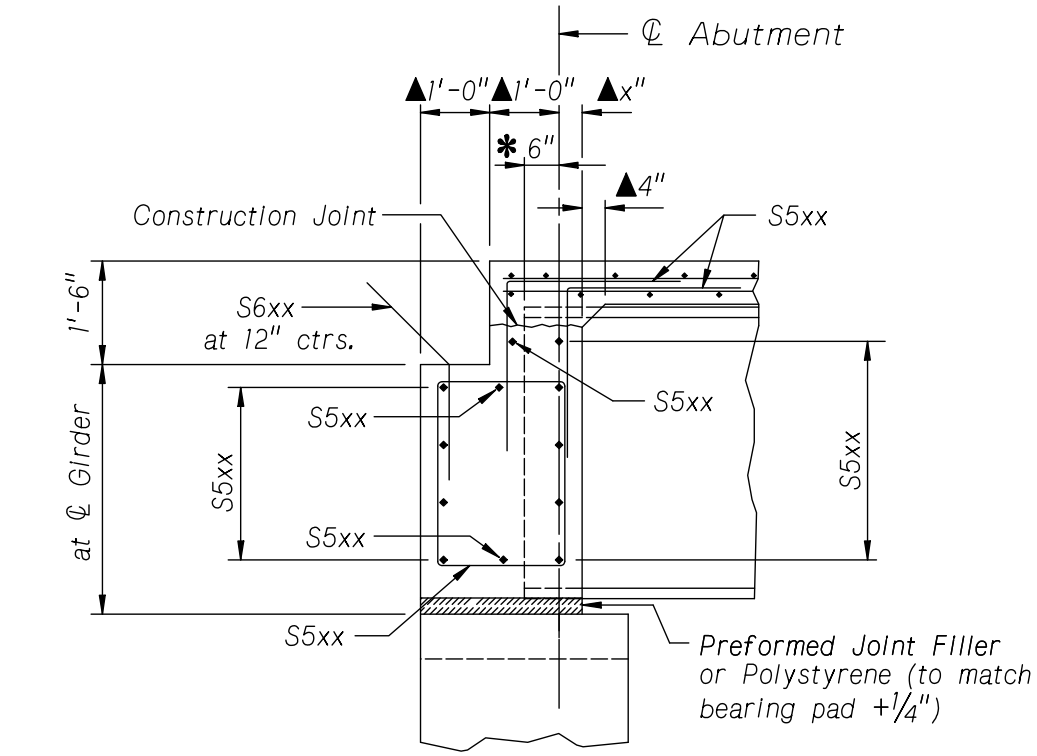

SECTION B-B

3.4.2 – Field Splice Policy

General Design Criteria

- Designers should minimize the number of different splice plate thicknesses specified for a bridge.
- Field splice shall be located in a constant web depth area.
- Girder clear gap shall not exceed 0.375 in. and web center shall be used for alignment details (not shown in the plans).
- Connection bolts shall be 7/8 in. ASTM A325 (AASHTO M164).
- Class B surface condition (weathering steel girders blast cleaned) should be used for splice design. Class A condition shall be used for other surfaces (painted).
- Web and flange bolt threads shall be excluded from the shear plane.
- For composite design, only slab reinforcement developed beyond the splice shall be used and slab thickness shall be reduced 1/2 in. for the wearing surface.
- For LFD design, Designers shall use HS20 loading for live load fatigue.
- A minimum of eight bolts must be used for each half of a flange splice on all girders.

Elimination of Field Splices

Based on construction criteria and the approval of the Engineer, Contractors may eliminate any field splice by extending the heavier section without any change in contract price or quantities. Designers shall include Standard Note # 137 on the Front Sheet of the Bridge Plans. Changes in the plans will be shown in the Shop Plans.

Detailing

The following data tables and detail are available as CAD cells.

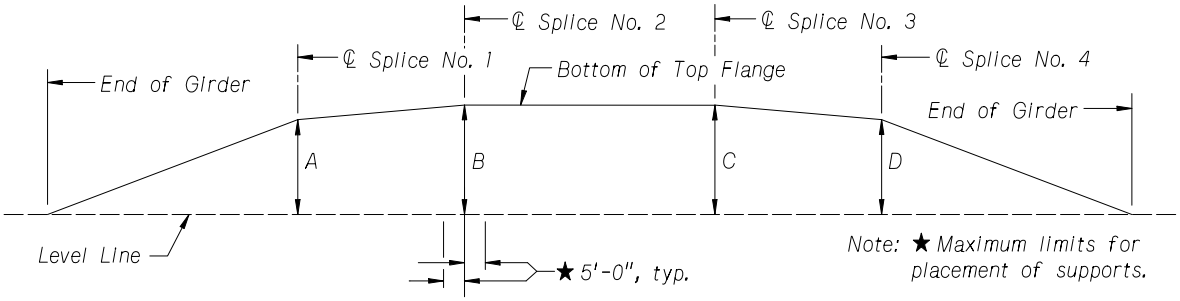

SUPPORT HEIGHT FROM LEVEL LINE				
LOCATION	A	B	C	D
HEIGHT	·	·	·	·

Note:
To be used when the contractor elects to connect two or more sections on the ground.

SUPPORT DIAGRAM FOR FIELD ASSEMBLY OF STEEL GIRDERS

Not to Scale

FIELD SPLICE DATA													
	Plate A	Plate B	Plate C	Plate D	Plate E	Number of Bolt Spaces				Bolt Spacing			
Field Splice	Thick, Width, Length	Thick, Width, Length	Thick, Width, Length	Thick, Width, Length	Thick, Width, Length	H	J	K	N	P	F	G	S
·	·	·	·	·	·	·	·	·	·	·	·	·	·
·	·	·	·	·	·	·	·	·	·	·	·	·	·

AC=FSTAB1

FIELD SPLICE DATA							
Field Splice No.							
	Thickness		Width		Length		
Plate A	·		·		·		
Plate B	·		·		·		
Plate C	·		·		·		
Plate D	·		·		·		
Plate E	·		·		·		
Number of Bolt Spaces				Bolt Spacing			
H	J	K	N	P	F	G	S
·	·	·	·	·	·	·	·

AC=FSTAB2

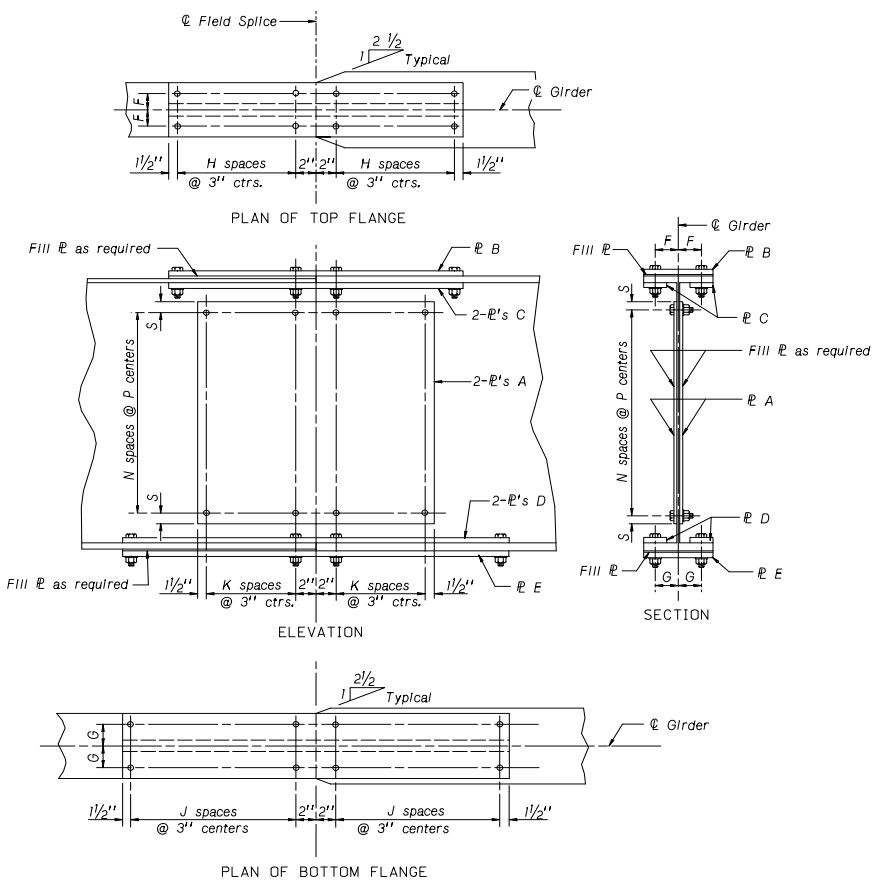

FIELD SPLICE DETAILS
AC=FS

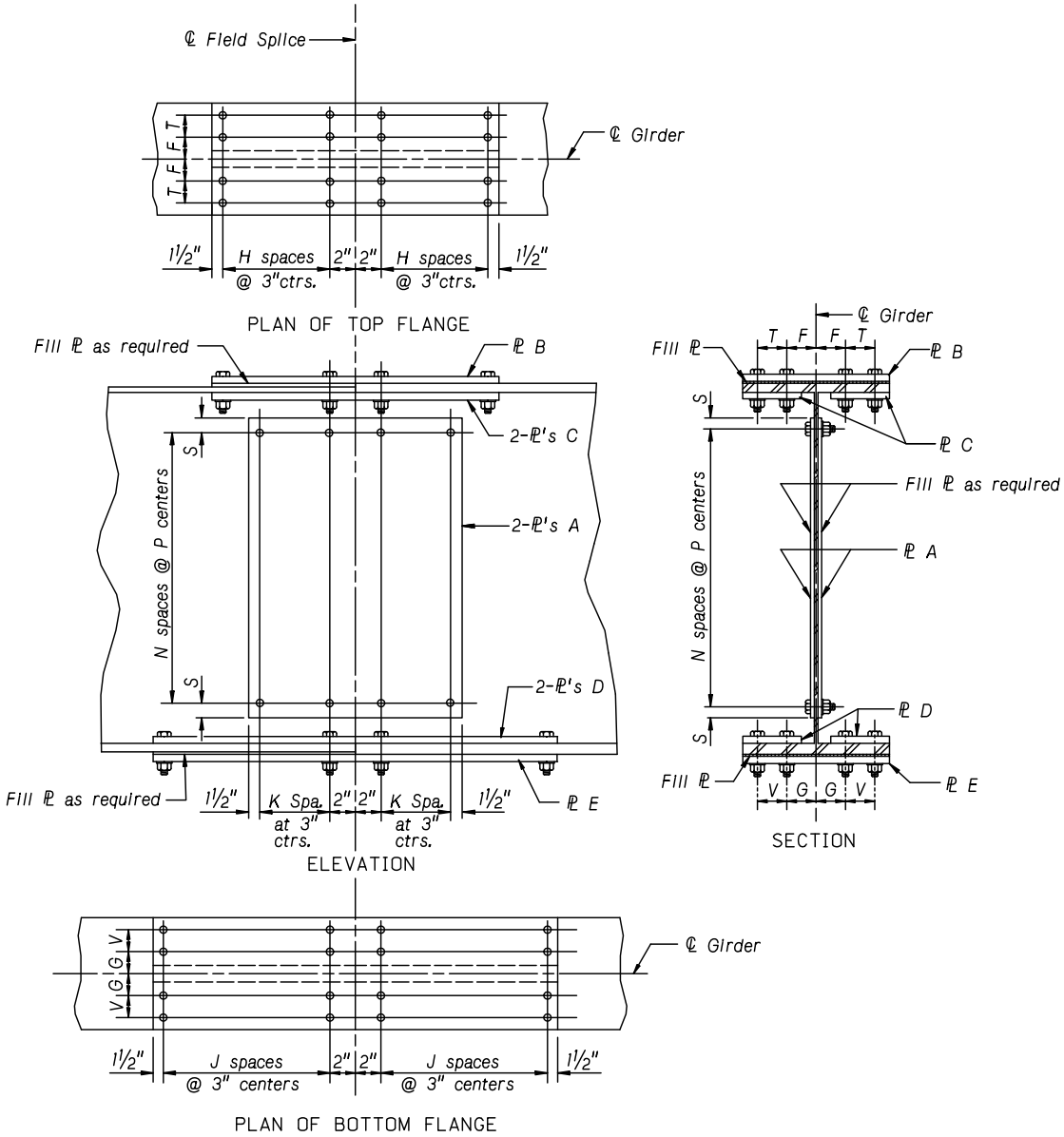

FIELD SPLICE DETAILS

FIELD SPLICE DATA									
Field Splice No.									
	Thickness		Width			Length			
Plate A	·		·						
Plate B	·		·						
Plate C	·		·						
Plate D	·		·						
Plate E	·		·						
Number of Bolt Spaces				Bolt Spacing					
H	J	K	N	P	F	G	S	T	V
·	·	·	·	·	·	·	·	·	·

3.4.3 – Bearing Stiffener Design Policy

General Design Criteria

The following definitions apply to the details in this policy.

Definitions

bf = Bottom Flange width
b = Stiffener width
b' = Net stiffener width touching bottom flange
t = Stiffener thickness
tw = Web thickness
18tw = AASHTO length of web

Integral Abutments

Integral abutments do not normally require bearing stiffeners because the girder ends are cast into concrete before significant shear is applied to the bearing. However, the Bridge Division will require a stiffener be placed at the centerline of bearing for anchorage. (Use detail AC = STIFB2 shown on the following page.)

Column Design

The following cross-sectional area may be used to design bearing stiffeners as a column between flanges of a steel girder.

Column Area = $2*(b*t)+18*tw^2$

Bearing Area = $2*(b'*t)+18*tw^2$

Note – the $18*tw^2$ is optional

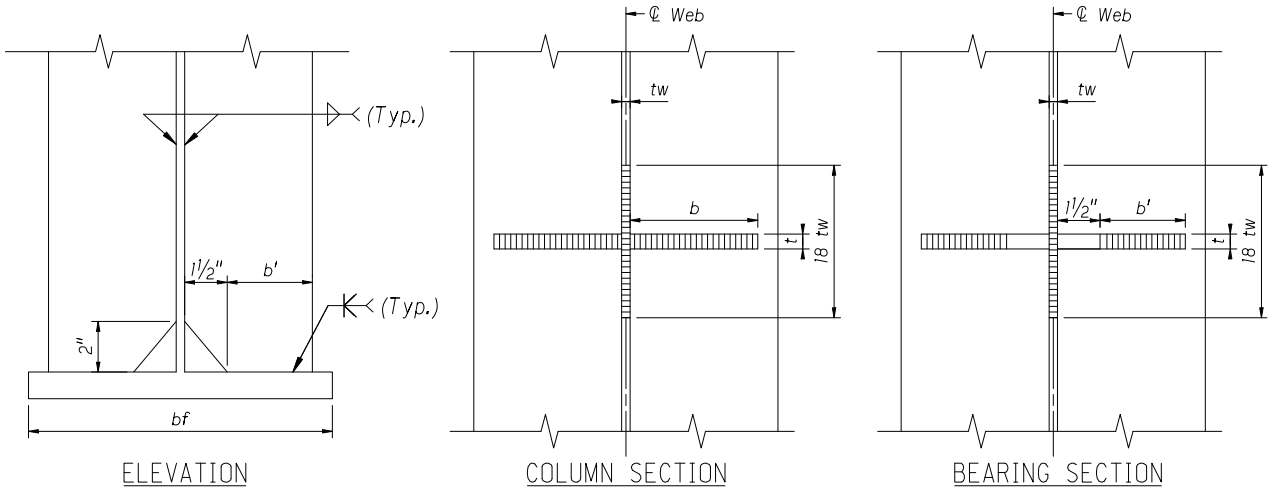

Bearing Stiffener Details

General Bearing Stiffeners

The detail (AC=STIFB1) will be used when bearing stiffeners are required by design. Plans must indicate locations where the detail is applied to the fabrication of the girder.

Stiffeners at Bearing

When bearing stiffeners are not required by design, the detail (AC=STIFAB) will be used for rolled beam girders and at integral abutments. A fillet weld is sufficient at these locations. The “Full Penetration” weld and “Grind to Bear” alternate are not required. Plans must indicate the locations where the detail applies to the girder.

A stiffener plate will be required at the CL of bearing for integral abutments, even though; it is not required by design. The stiffener will be used to anchor the girder, instead of acting as a bearing stiffener. Therefore, a full penetration weld will not be required.

Since rolled beams may not require bearing stiffeners, stiffener attachment at the piers for rolled girders need only meet the design criteria for the separator design. Again, a full penetration weld will not be required at these locations.

Pier Bearing Stiffeners

All pier bearing stiffeners will be perpendicular to the CL of the girder as shown in the cell below (AC=STIFP).

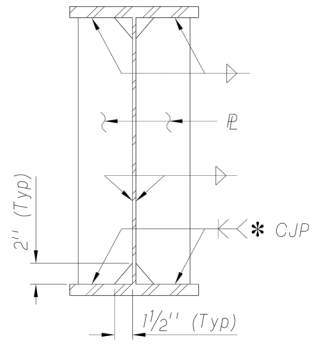

BEARING STIFFENERS
AT ABUTMENTS AND PIERS

✻ As an alternate: Grind to Bear with a 5/16'' Fillet Weld on each face.

AC=STIFB1

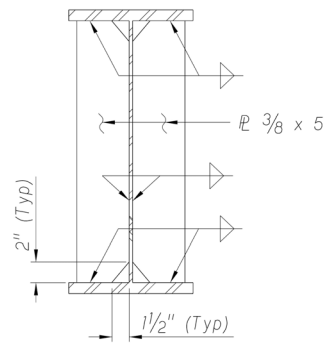

ANCHORAGE STIFFENER AT ABUTMENTS
(Where Bearing Stiffeners are not required)
Not to Scale
AC=STIFAB

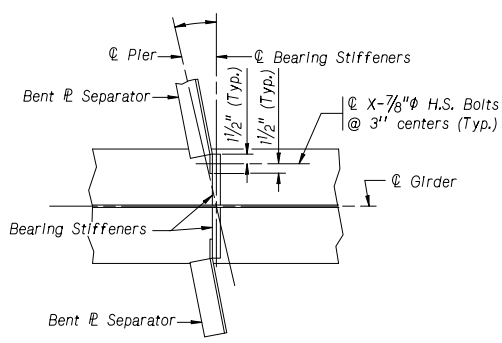

PLAN OF BEARING STIFFENER AT PIERS

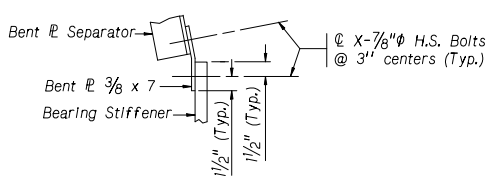

ALTERNATE SEPARATOR CONNECTION

AC=STIFP

3.4.4 – Steel Girder Separator Policy

General

- Where supports are not skewed or are skewed more than 20°, intermediate separators shall be normal to the girders. Where supports are skewed more than 20°, separators may be contiguous or in staggered patterns. Where supports are skewed less than 20°, intermediate separators may be normal or placed in skewed lines parallel to the supports.
- For structures on curved alignments, separators shall be provided on radial lines.
- The Modified K-Frame Separator is recommended for the original design with the Bent Plate Separator as an alternate. “X” and “K” frames are allowed on straight bridges where the overhang is minimized. Modified K-Frame, “X”, and “K” frames should have an angle of 30 ° or more angle between angles. Consideration should be given for thicker Bent Plate Separators with girder spacing exceeding 10 feet or plate depth exceeding 5 feet.
- Quantities shown on the plans shall be based on the separator with the least weight.
- Bolt spacing for Bent Plate Separators shall be as close as possible to the 7 in. maximum spacing.

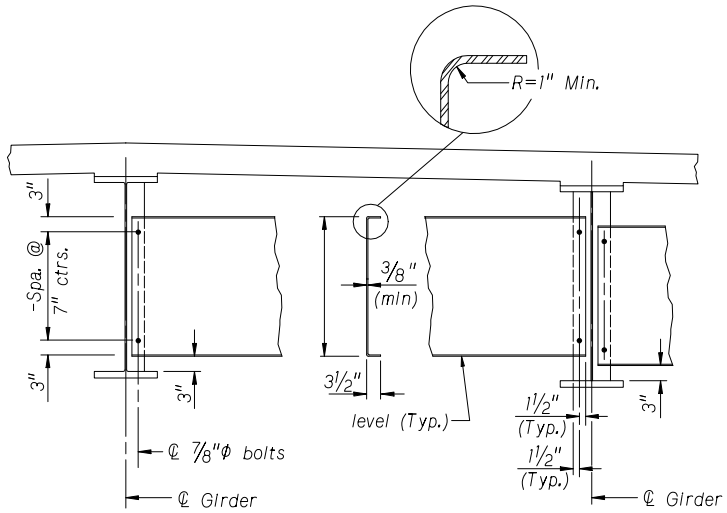

BENT PLATE SEPARATOR

AC=BENTPL

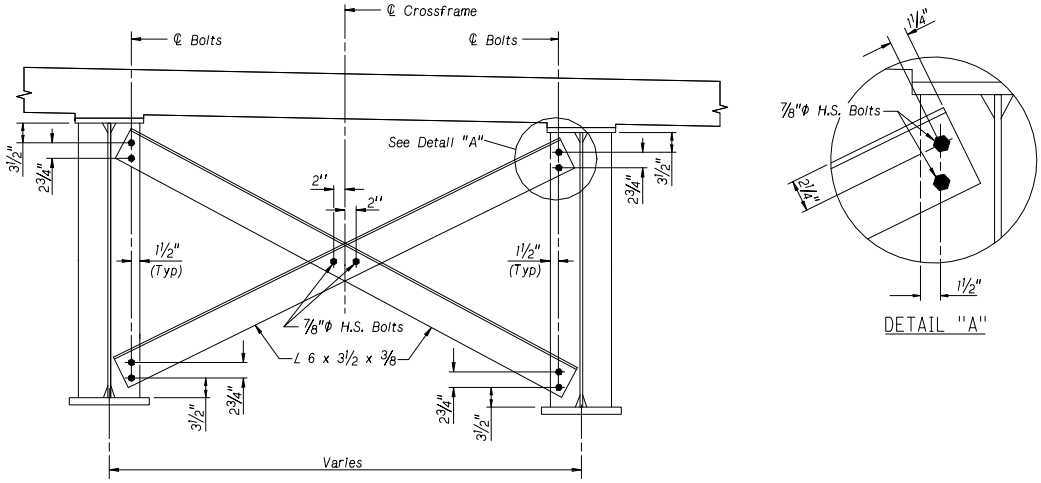

X-FRAME

AC=XFRAME

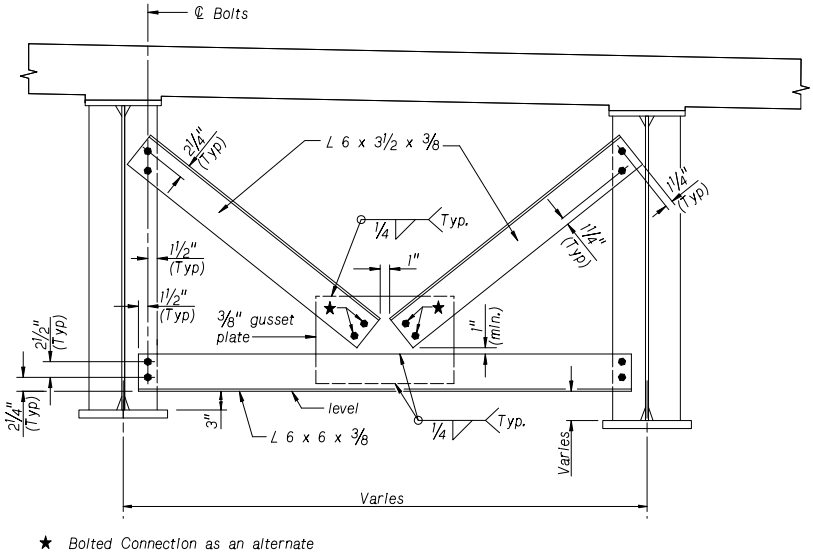

K-FRAME

AC=KFRAME

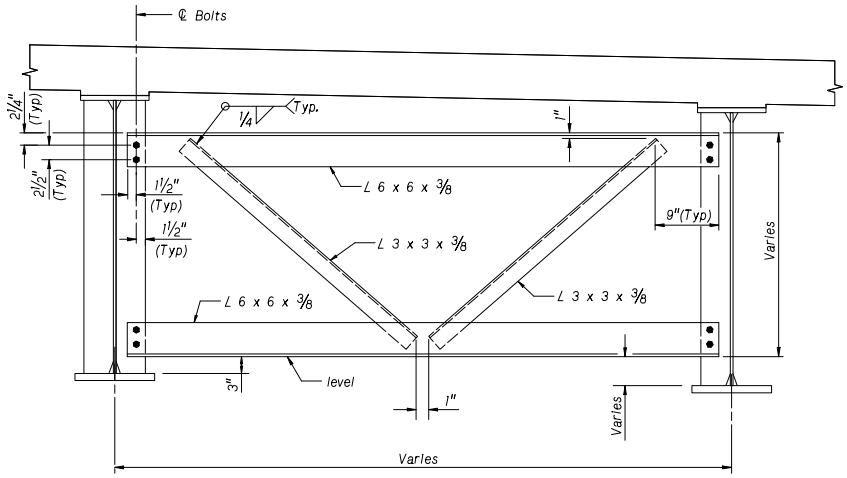

MODIFIED K-FRAME

AC=MKFRM1

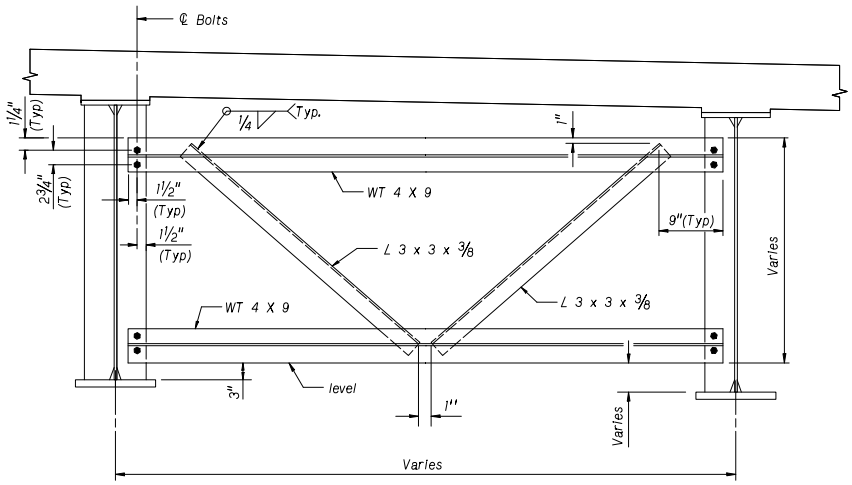

MODIFIED K-FRAME

AC=MKFRM2

Design Requirements

- Minimum depth and maximum spacing for girder separators shall satisfy Article 6.7.4 of the AASHTO LRFD Bridge Design Specifications.
- Lateral bracing for wind loads shall satisfy Article 4.6.2.7 of the AASHTO LRFD Bridge Design Specifications.
- All slenderness requirements in Articles 6.8.4 and 6.9.3 of the AASHTO LRFD Bridge Design Specifications shall be met.

Stiffener Plates at Separators

Welded Connections

The transverse stiffener plate at separator connections should be designed to meet AASHTO LRFD Bridge Design Specifications category C' fatigue criteria. Separator stiffeners should be welded to both the tension and compression flanges as shown below. The TYPICAL STIFFENER WELD DETAIL (AC = STIFWD) must be used for welded separator connections; see GENERAL STEEL GIRDER DESIGN POLICY.

Bolted Connections

If design requires an AASHTO category B connection, Designers should check the fatigue stresses at the tip of the stiffener to web weld.

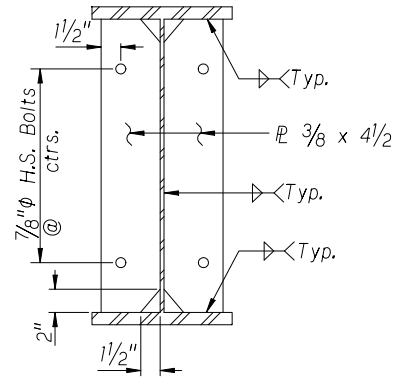

STIFFENER PLATES AT SEPARATORS
AC=STFSEP

If the fatigue stress range at the tip of the web weld is category C', then the web connection should be a weld as shown in cell STFWD. If the fatigue stress range is category B, then the web connection should be bolted angles, as shown in cell STFBT. Designers should note that the stiffener base plate for bolts webs is much thicker to avoid clipping the angle stiffeners.

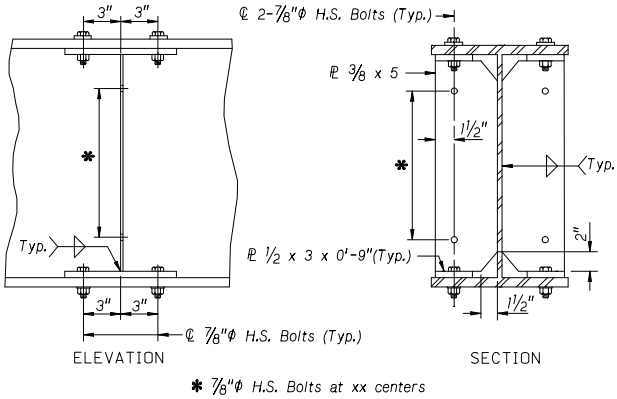

BOLTED STIFFENER AT SEPARATORS
(BOLTED FLANGE WITH WELDED WEB)
AC=STFWLD

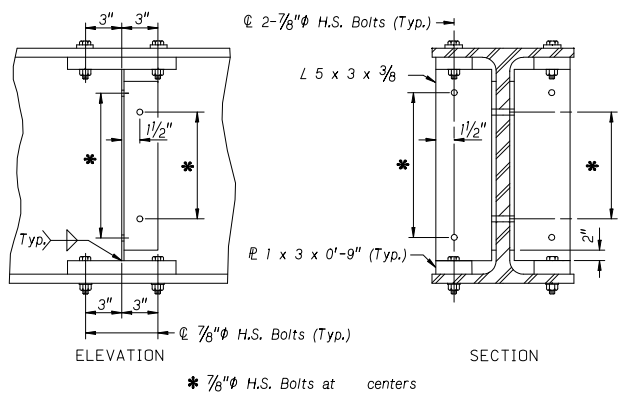

BOLTED STIFFENER AT SEPARATORS
(BOLTED FLANGE AND BOLTED WEB)
AC=STFBLT

3.4.5 – Welded Plate Girder Policy

Width	Thickness
1’-0”	3/4, 7/8
1’-2”	1, 1 1/8, 1 1/4
1’-4”	1 3/8, 1 1/2, 1 5/8
1’-6”	1 3/4, 2
1’-8”	2, 2 1/4
1’-10”	2 1/4, 2 3/8
2’-0”	2 3/8, 2 1/2
2’-2”	2 1/2, 2 3/4
2’-2”	2 1/2, 2 3/4

Flange Plates

Shop welded butt splices must avoid the maximum moment regions. Splices should be specified when a reduction in flange size would represent a saving of about 800 lb. of plate. Flange widths will be specified in 2 in. increments. The table at right indicates preferred flange plate width to thickness ratios. ¾ in. x 1 ft. - 0 in. is the minimum Bridge Division flange size.

Designers should note that there is a cost break for plates less than 1½ in. thick.

The number of different flange plate widths and the number of different flange plate thicknesses used on a given bridge design should always be kept to a minimum. Designs should vary the flange thickness and minimize the flange width changes.

Web Plates

Web depths shall be specified in the Plans using 2 in. increments. Designers must meet all code requirements for stresses, strengths, deflection, and proportionalities and consider economics if traditional minimum web depth of 4 ft. is reduced. The web must have a constant depth for at least 3 ft. - 6 in. at the supports.

Web thickness should have an original and an alternate design. The original design shall be a stiffened web normally 1/16 in. or 1/8 in. less than the unstiffened web. The alternate design will be the unstiffened web. The Standard Note # 231 shall be shown on the girder sheets. Webs may be designed to vary in thickness between the field splices. Under no circumstances will butt splices be allowed in areas of high shear.

Hybrid Girders

Designers shall consider the use of hybrid girder for positive moment areas, negative moment areas or the entire girder if the preliminary design of the superstructure indicate a need for using higher strength steel – HPS70W – for one or both of the flanges.

Stiffeners

Bearing stiffener designs should be in accordance with the Bearing Stiffener Policy. Longitudinal stiffener designs should generally be avoided.

The most economical transverse stiffener design, for fabrication reasons, is no stiffener plates in the low shear areas and a minimum number in the high shear areas. The minimum stiffener size shall be 3/8 in. x 5 in.

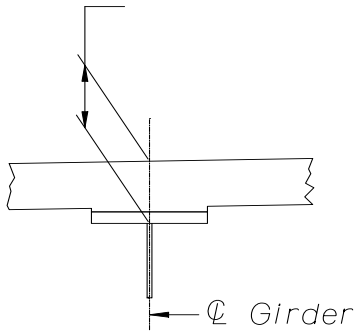

SHIM DETAIL
AC=SHIMWP

Shims

Plans must indicate the expected shim at the supports as shown in the cell AC=SHIMWP. The shim for welded plate girders is shown as the distance from the top of the web line to the finished grade. The top of web line should be established so that the thickest top flange plate is ½ in. below the bottom of the bridge deck. This provides a ½ in. construction tolerance and a minimum shim at these locations. Field splice top plates may be embedded in the deck no more than 1 in.

Welded Plate Girder Camber and Blocking Diagram

A Camber and Blocking Diagram must be provided on the girder sheets as outlined below.

- Blocking Ordinates (B.O.) establish relative positions of the superstructure from a level line. The blocking diagram must provide Blocking Ordinates at all end supports where the superstructure is discontinuous and at all field splices. The Blocking Ordinates will match the grade offsets at the field splice locations. Blocking Ordinates will be used to fabricate the girder in the shop and to assemble the sections in the field.
- Camber Ordinates (C.O.) are the offset distances, at span tenth points, from the required camber to a chord line drawn from end to end of a field section. Welded plate girders will be cambered to counter the total dead load deflection while sustaining the top of web line parallel to the finish grade. Future surfacing dead load deflections should not be included in the shim deflections. The computer program, NDOR Camber, is available for “in house” designs to provide Camber and Blocking Ordinates. The Deflection Ordinates output provided by NDOR Camber must not be used as the dead load deflection for shims.

Deflection, Camber & Blocking Ordinates				
Location	**Span Tenth Point**	**Camber Ordinate (in.)**	**Blocking Ordinate (in.)**	**DL Deflection for Shims (in.)**
Abutment No. 1	10	00		00

- A table(s) indicating the deflection for shims, Camber Ordinates, and the Blocking Ordinates must be shown in the Plans. Camber and Blocking Ordinates shall be in feet, inches, and fraction of inches. Shims may be in decimals of inches.

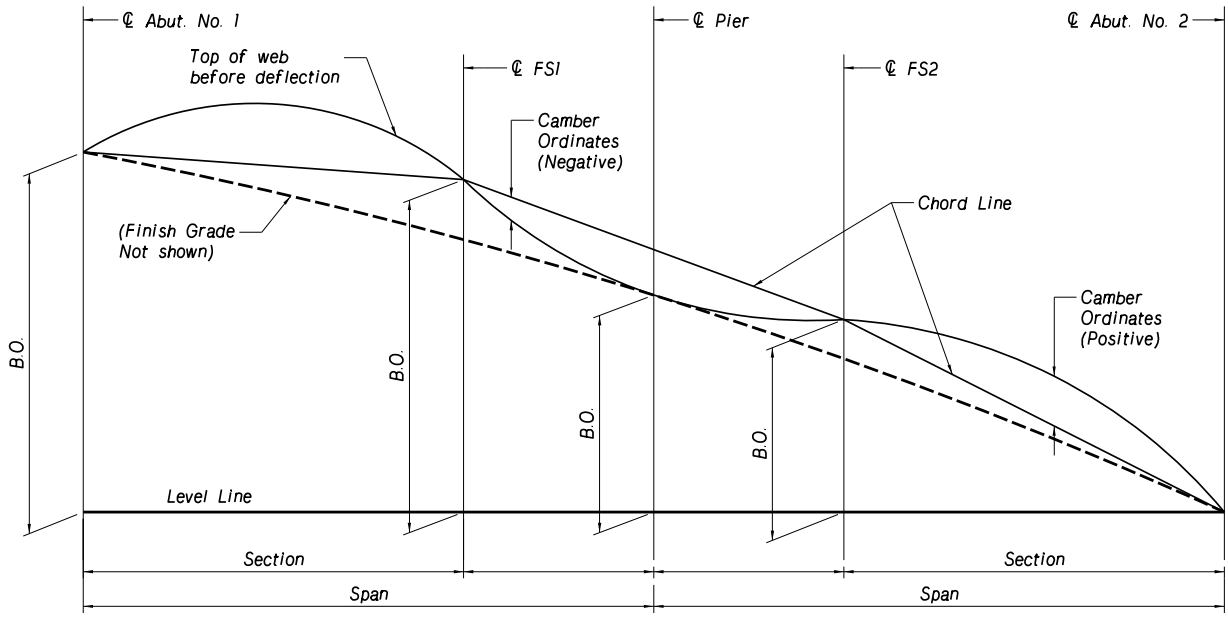

CAMBER AND BLOCKING DIAGRAM

Generally, a Camber and Blocking Diagram with a single Camber and Blocking Data Table will be adequate. However, if Camber Ordinates in adjacent girders differ by more than ¼ inch at tenth point locations, Camber and Blocking Ordinates will be required for each individual girder.

Quantities

Quantities shall be based on girders with transverse stiffeners and calculated by using the Plan dimensioned volume times 490 pcf. 1 lb. will be used as the weight per bolt.

3.4.6 – Rolled Beam Girder Policy

Blocking Diagram

Rolled beams will not be cambered unless authorized by the Bridge Engineer. Therefore, Camber Ordinates at the span quarter points will not generally be provided on the Plans. A Blocking Diagram must be provided on the girder sheets as outlined below.

- The Blocking Diagram must provide ordinates at all end supports where the superstructure is discontinuous and at all field splices. The Blocking Ordinates will match the grade offsets at the field splice locations.
- The placement (upward or downward) of the mill camber must be specified on the Blocking Diagram. The computer program, NDOR Camber, is available for "in house" designs to check the vertical offsets between grade and a straight line between field splices. The offset will determine mill camber, end welded stud shear connectors length and girder seat adjustments. The Deflection Ordinates output determines end welded stud shear connector length and girder seat adjustments. The Deflection Ordinates output provided by NDOR Camber must not be used as the dead load deflection for shims.
- Since a straight line is assumed between the Blocking Ordinates, the girder seat elevations at the piers (or bents) may need to be adjusted accordingly.
- A table(s) indicating the deflection for shims and the Blocking Ordinates must be shown in the Plans. Camber and Blocking Ordinates shall be in feet, inches, and fraction of inches. Shims may be in decimals of inches.

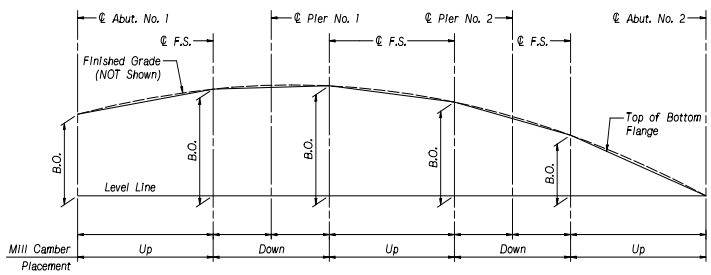

ROLLED BEAM BLOCKING DIAGRAM

Deflection & Blocking		
Location Span 10th points	**Blocking Ordinate (in.)**	**DL Deflection for Shims (in.)**
Abut.	0	0
.1		xx
.2		xx
.3		xx
FS No.	xx	
.4		xx

Shims

Plans must indicate the expected shim at the supports as shown in the cell AC=SHIMRB. The minimum shim for rolled beams is the distance from the top of the thickest top flange to the finished grade. The minimum shim must provide ½ in. clear between the top flange and the bridge deck. This provides a ½ in. construction tolerance and a minimum shim at these locations. Field splice top plates may be embedded in the deck no more than 1 in.

Quantities

Quantities for the rolled beam shall be based on the plf provided by AISC. Other structural steel quantities for the girder shall be based on 490 pcf. 1 lb. will be used as the weight per bolt.

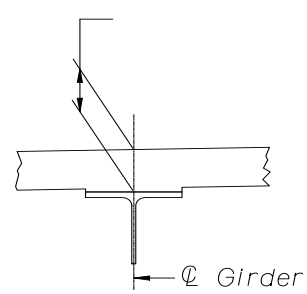

SHIM DETAIL
AC=SHIMRB

SECTION 3.5: Bearing Devices

3.5.1 – General Bearing Design Policy

Definitions

The following definitions apply to all types of bearings:

Bearing	Assembly of materials designed to transmit forces from the superstructure to substructure while facilitating translation and/or rotation.
Bearing Pad	A pad constructed partially or entirely of elastomer for the purpose of transmitting loads and facilitate movements.
Length (L)	The dimension parallel to the CL of the girder.
Width (W)	The dimension perpendicular to the CL of the girder.
Rotation (R)	A lack of parallelism between the top and bottom of the bearing.
Elastomer	Virgin natural rubber or virgin neoprene.
Translation	Horizontal movement of the bridge.
Transverse	The horizontal direction normal to the longitudinal axis of the bridge.

Bearing Pads

There are three general types of bearing pads approved for use by the Bridge Division:

1. Plain Elastomeric pad made from elastomer only.
2. Steel reinforced elastomeric pad made from steel plates vulcanized between layers of elastomer.
3. Cotton duck pad (CDP or fabric pad) made from layers of cotton duck and elastomer bonded together during vulcanization.

See Elastomeric Bearing and CDP Policies for more specific information.

Bearing Design Criteria

- The type of bearing to be used shall depend on vertical loads, horizontal movement and rotation requirements. (See Bearing Selection)
- NDOR Designers may use the Excel bearing design spreadsheet Bearings ((\\drapps\Bridge\Spreadsheets\Bearing Pad Design) for the design of Elastomeric and CDP bearings.
- Tapered bearing pads or holes of any form in the bearing pad will not be allowed.

Horizontal Movements

Temperature Movement

- Temperature movement (TM) as defined in the Temperature Movement Policy 2.2.6 shall be used to calculate thermal effects.

Shrinkage and Creep of Prestressed Concrete Girders

- Shrinkage and creep shortening of pre-tensioned and post-tensioned concrete girders must be considered when designing expansion bearings.
- The following table can be used to estimate shrinkage and creep shortening for NU prestressed concrete girders.

Girder length (ft.)	50	65	82	100	115	130	150	165	180	195
Shrinkage & Creep Shortening (in.)	3/8	1/2	5/8	3/4	7/8	1	1 1/4	1 3/8	1 1/2	1 5/8

- For spans over 195 ft. and post-tensioned concrete girders, Designers should refer to AASHTO LRFD Bridge Design Specifications 5.4.2.3.2 and 5.4.2.3.3 for more precise estimate.

Rotation

Longitudinal and transverse rotations are assumed to take place about the CL of the bearing. Generally, the most significant rotations are about the transverse bearing axis. However, if rotations about the longitudinal axis are significant, they should be included in the bearing design.

Bearing rotations may result from one or more of the following sources:

- Grade slope.
- Girder camber.
- Fabrication and construction tolerances.
- Dead load and live loads.

The calculation of live load bearing rotation is not required for bearings designed in accordance with NDOR bearing design policies, because live load rotation is accounted for in the minimum design rotation requirement.

Designers must calculate dead load rotation for each bearing. For design purposes, dead load rotation will be defined as the slope of the portion of the girder in contact with the bearing and shall be calculated as follows:

- Slope for rolled sections shall be taken as the slope of a straight line between bearing elevations.
- Slope for welded plate girders may be taken as the slope of a straight line between grade elevations approximately 12 in. on either side of CL of the bearing.
- Slope of prestressed girders shall be taken as the slope of a straight line between the bearing elevations, plus the slope of a straight line between the end of the girder and the 1st tenth point due to the net girder camber.

See “Cotton Duck”, “Elastomeric”, or “Pot” Bearing Policies for specific rotation information.

Designers should note that beveled sole plates are not required for girder slopes of less than 0.010 radians (1% slope). See Sole Plate Policy.

Fixed Bearings

Fixed bearings are designed to not allow horizontal movement. They are designed only for vertical loading and rotation requirements. Anchor bolts or rebar pinning must be designed to transmit horizontal loading to the substructure. For the purpose of fixed bearing design, it will be assumed that the substructure is capable of resisting the lateral load.

Expansion Bearings

Expansion bearings are designed to accommodate translation in addition to rotation and vertical loading requirements. Plain and reinforced elastomeric bearings are designed to allow movement by utilizing their elastomeric properties. CDP bearings shall be designed for expansion by adding a low friction Polytetrafluorethylene (PTFE) sliding surface to the pad, which slides across a stainless steel plate attached to the sole plate.

PTFE Bearing Surface

To accommodate horizontal movement, a 3/32 in. thick, low friction, virgin, unfilled Polytetrafluorethylene (PTFE) sheet shall be bonded to the upper surface of a CDP. The Bridge Division does not allow the use of PTFE with plain or reinforced elastomeric bearings.

Anchor Bolts

- Anchor bolts shall be used with fixed and expansion bearings to securely anchor steel girders and rolled beams to piers or bents.
- Anchor bolts will not be required where turndowns and pier concrete diaphragms are being used.
- Number, size, and depth of embedment of anchor bolts shall conform to Standard Specifications for Highway Bridges 10.29.6.2 minimum requirements.
- Anchor bolts shall be designed to resist uplift as specified by Standard Sprecifications for Highway Bridges 3.17.
- Anchor bolt diameter should be specified in the plans using English bolt size.
- Swedged anchor bolts must be specified when anchor bolts are placed in existing concrete.

See Pedestal Policy for Anchor Bolts Layout.

3.5.2 - Bearing Selection

Cost and size are the two factors that generally govern the selection of a bridge bearing. Designers should use their engineering judgment and the following guidelines for bearing type selection:

- For fixed bearings with equivalent loads, there is little cost difference between plain cotton duck pads, plain elastomeric pads, and moderately sized reinforced elastomeric pads with a minimal number of shims. The cost increases significantly for reinforced elastomeric bearings as the size and the number of shims increases.
- For expansion bearings with movement up to 2 ½ in., there is little cost difference between CDP bearings with PTFE and stainless steel sliding plates, and reinforced elastomeric bearings.
- CDPs with PTFE and stainless steel plates are generally required when horizontal movement is greater than 2 ½ in., due to the Bridge Division bearing height limitation for elastomeric pads.
- Plain or reinforced elastomeric bearings are generally used for light to moderately heavy loads and moderate movement, or where area of the pad is not a design contraint, as in the case of prestressed wide flange girders.
- CDPs are used for light to very heavy loads, and can accommodate any horizontal movement when used with PTFE.
- For any given design load, the area required for a CDP bearing will be smaller than the equivalent elastomeric bearing.
- Pot bearings are only considered for extremely heavy design loads (in excess of 350 kip) or unusual circumstances and Designers should seek Assistant Bridge Engineer approval before using them.
- Due to the ease and speed of bearing design, using the bearing design spreadsheet, Designers may want to design both an elastomeric and a CDP bearing before deciding which type of bearing to use. Designers should discuss the options with their Section Leader if they are unsure which type of bearing may be the most appropriate or cost effective for a given application.

Bearing Layout

- Bearings will be placed in line with the girder and centered with the following:
  - Anchor bolts, if any.
  - CL of abutment for steel and concrete girders, usually 6 in. from end of the girder.
  - CL of Pier/bent for steel girders.
  - A minimum of 10 in. from CL of Pier/Bent for Prestressed NU and IT girders.
- All elastomeric and CDP bearing pads shall be recessed 1/8 in. into the girder seat. The 1/8 in. recess must be shown in the plan view of the abutment and pier/bent sheets.
- Girder seat elevations are given to the top of the girder seat, not the bearing pad recess.
- Prestressed girder structures should use the maximum net girder camber in calculating the girder seat elevation.

3.5.3 – Sole Plates

General

- Sole plates are used to anchor girders, distribute loads to bearings and reduce dead load bearing rotations.
- A beveled sole plate is required when the slope of the girder at the centerline of the bearing exceeds 1.0%.
- When beveled sole plates are used, they shall be beveled to match the girder slope as near as possible.
- When using a beveled sole plate, the direction of the bevel should be indicated on the plans.
- Anchor bolts or tie bars for fixed bearings shall be designed to resist lateral movements.
- A modified sole plate shall be used to improve fixity for fixed bearings with anchor bolts and bearing pads greater than 1 ½ in. thick.

NDOR Designers may use the Sole Plate Design spreadsheet in conjunction with Elastomeric or CDP bearing design in the bearing design spreadsheet bearings (\\drapps\Bridge\Spreadsheets\Bearing Pad Design).

Thickness

The table at right may be used to determine minimum sole plate thickness. The average thickness of a beveled sole plate shall be used as its minimum thickness.

Length

The length of the sole plate is measured along the centerline of girder. Sole plates shall be a minimum of ¾ in. longer than the bearing pad or the stainless steel plate when PTFE is used. Minimum sole plate length is 1 ft. - 0 in.

Width

Sole plate width is measured perpendicular to the centerline of the girder. The sole plate will extend a minimum of 1 ¼ in. beyond the girder flange on each side of the girder. Where anchor bolts are used, a minimum of 1 ¼ in. is required between the edge of the bolt hole and the edge of the girder flange.

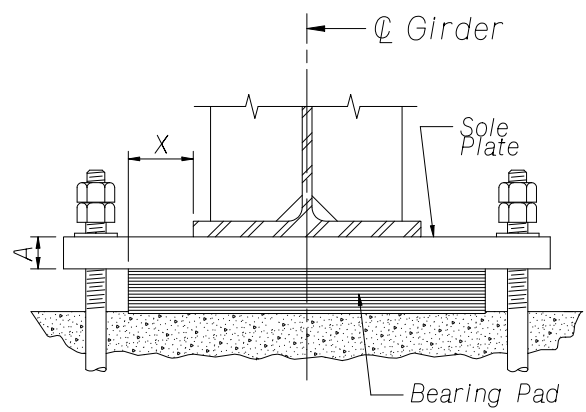

1.2 ksi Bearing Stress	
X	A min.
3½"	1½"
4"	1¾"
4¾"	2"

Stainless Steel Plate

- The minimum length of the stainless steel plate (Lss) shall be the greater of 11 in. or the following:

  For steel girder bridges

  Lss = 2TM + Pad Length

  For prestressed concrete girder bridges

  Lss = TM + Shrinkage + Creep + Pad Length

This will eliminate the problem of calculating accurate bearing placement based on temperature at the time of girder placement.

- The width of the stainless steel plate shall be the width of the bearing pad plus ¾ in.
- The stainless steel plate shall be 13 gage (0.0897 in. – 0.0938 in.).

Anchor Bolt Holes/Slots

Holes and slot widths for anchor bolts should be the bolt diameter plus ¼ in. The minimum slot length is 9 in. or two times the total calculated movement, plus ½ in., whichever is greater.

Modified Sole Plate

For a fixed bearing with anchor bolts, when bearing pad is greater than 1 ½ in. thick, a 4 in.x 6 in. plate shall be welded to the bottom of the sole plate centered on each bolt hole. Plate thickness shall be equal to the bearing height, minus 5/8 in. [1/8– pad recess plus ½ in. for clearance]. The CADD cell AC=MSOLPL should be placed on the plans when modified sole plates are being used.

Sole Plate Placement

Slotted sole plates will be centered on the anchor bolts when the girder is placed. The CADD cell AC=MSOLPL and note should be placed on the plans when modified sole plates are being used.

NOTE:

Sole plates shall be centered over the anchor bolts

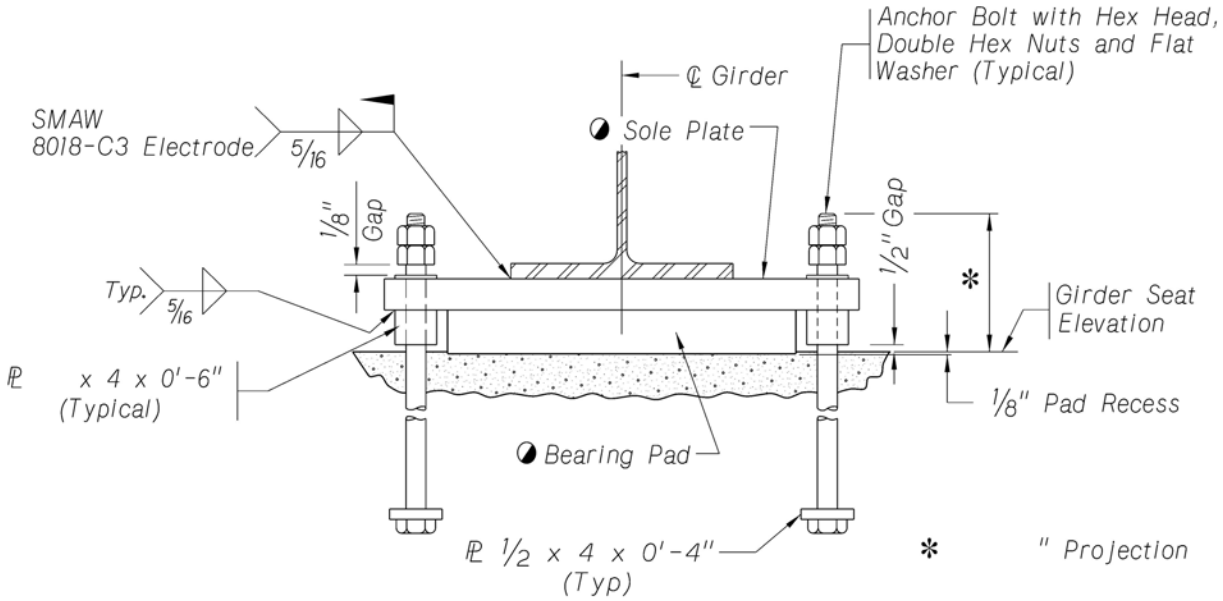

FIXED BEARING WITH MODIFIED SOLE PLATE

Sole Plates and Fabric Pads need to be inspected prior to installation.
Please contact the Bridge Office a minimum of three weeks before contractor's scheduled installation for inspection.

AC=MSOLPL

Sole Plate Details

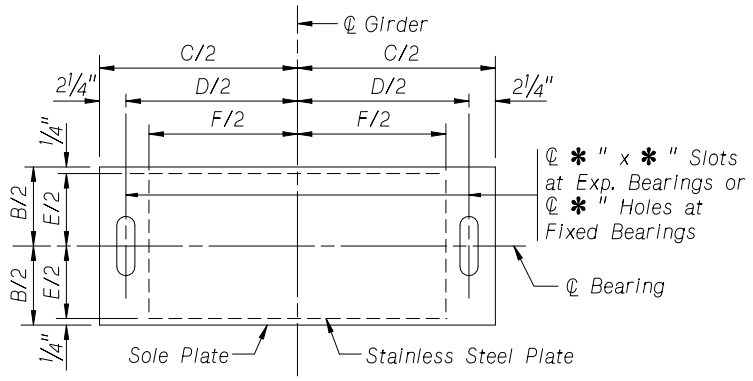

SOLE PLATE

AC=SOLEPL

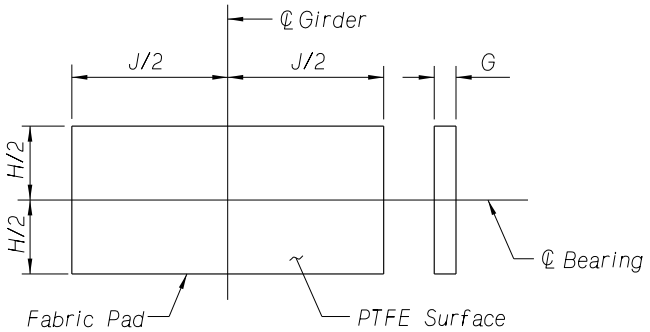

FABRIC PAD

AC=SOLPAD

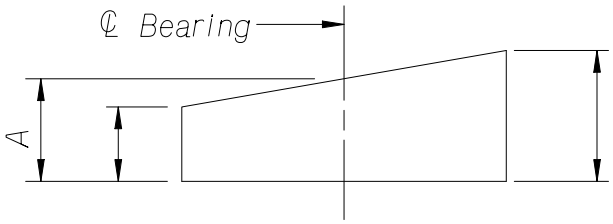

SECTION OF BEVELED SOLE PLATE

AC=SOLBEV

Note: Omit PTFE low friction surface and stainless steel plate at fixed bearing device.

DIMENSIONS FOR BEARING DEVICES									
LOCATION	SOLE PLATE				STAINLESS STEEL		FABRIC PAD		
	A	B	C	D	E	F	G	H	J
Abutment No.	.	.	.	.	.	.	.	.	.
Abutment No.	.	.	.	.	.	.	.	.	.

AC=SOLTAB

3.5.4 – Elastomeric Bearing

General

- Elastomeric bearings rely on the pad elastic properties in shear to allow translational and rotational movement of the bridge.
- Bridge Office Policy specifies the use of AASHTO LRFD Bridge Design Specifications elastomeric bearing design Method "A" because it has been concluded that Method "B" will rarely, if ever, be cost effective. The testing proceedure for Method "B" must be approved by the Assistant Bridge Engineer.
- The material testing required for bearings designed using Method B could result in higher allowable design stresses, that could produce smaller (less expensive) bearings, but savings in the cost of the bearing are generally more than offset by the cost of the material tests.
- NDOR Designers may use the Elastomeric bearing design spreadsheet in the bearing design spreadsheet Bearings (\\drapps\Bridge\Spreadsheets\Bearing Pad Design).

Design Criteria

- Bearings are designed using service loads (unfactored), without impact.
- For plain and reinforced elastomeric bearings, Designers shall specify 60 durometer elastomer on the plans and use a shear modulus of G = 130 psi for design.
- Minimum elastomer thickness for plain pads and internal layers of reinforced pads is 3/8 in.
- All internal elastomeric layers of reinforced bearings will be equal thickness.
- Minimum elastomeric cover layer thickness is ¼ in.
- Minimum steel shim thickness is 11 gage, grade (33-36) Article 14.7.5.3.5 of the AASHTO LRFD Bridge Design Specifications provides minimum steel shim thickness equations for both the service limit state and the fatigue limit state and an ultimate minimum thickness of 0.0625 inch..
- A minimum of (2) steel shims are required for reinforced bearings.
- Maximum total bearing thickness is 5 in. without Section Leader approval.

Horizontal Movement

- Elastomeric bearing pads designed as expansion bearings shall be designed for the sum of horizontal movements Δ_s due to all applicable sources (i.e. thermal, creep, shrinkage, etc.). Use 65% of temperature movement (TM Section 2.2.6) for the horizontal thermal.

Rotation

Design for rotation in Method A is now implicit and no longer calculated and checked specifically. A beveled sole plate is required when the girder slope equals for exceeds 1.0% (0.010 Radians).

Note:

See Elastomeric Bearing Design Example or General Bearing Policy for additional design information.

ELASTOMERIC BEARING DESIGN EXAMPLE

The following example explains the steps used in the design spreadsheet shown in 3.5.4 and illustrates the required design information and the proper sequence of design calculations for elastomeric bearing design.

Design example assumptions:

- Reinforced expansion bearing required for load and movement conditions
- Service dead load per bearing DL_s = 158 kips
- Service live load per bearing LL_s = 77 kips
- Total bearing load DL_s+LL_s P = 235 kips
- Design horizontal movement Δ_s = 1.25 in.

Determine the elastomeric shear modulus for 60 durometer elastomer.

G = 0.130 ksi AASHTO LRFD Bridge Design Specifications Table 14.7.6.2.-1/BOPP

Select a layer thickness for internal elastomeric layers.

h_{ri} = 0.5 in. (design option BOPP minimum = 0.375 in.)

Select elastomeric cover layer thickness.

h_{rc} = 0.25 in. (design option) AASHTO LRFD Bridge Design Specifications 14.7.6

$0.7h_{ri}$ = 0.7 * 0.5 = 0.35 in. 0.25 < 0.35 in. OK

Select number of internal elastomer layers to be used in design.

4 (design option)

Calculate total elastomer thickness.

h_{rt} = $2h_{rc}$ + (4)h_{ri} = 2*0.25 + 4*0.5 = 2.5 in. AASHTO LRFD Bridge Design Specifications 14.7.6.3.4-1

Check elastomer thickness for allowable shear deformation.

h_{rt} > = $2\Delta_s$ = 2*1.25 = 2.5 in. 2.5 in. = 2.5 in. OK AASHTO LRFD Bridge Design Specifications 14.7.6.3.4

Select a bearing length.

L = 12.00 in. (design option)

Select a bearing width.

W = 20.50 in. (design option)

Calculate design bearing area.

A = LW = 12.00*20.50 = 246 in^2

Calculate shape factors.

S_I = LW/(2h_{ri}(L+W) = 12.00*20.50/(2*0.5(12.00+20.50)) = 7.569

AASHTO LRFD Bridge Design Specifications 14.7.5.1-1

Calculate average compressive stress due to total service load.

σ_s = P/A = 235 kips/246 in^2 = 0.955 ksi

Calculate average compressive stress due to service Dead Load.

σ_d = DL_s/A = 158 kips/246 in^2 = 0.642 ksi

Calculate average compressive stress due to service Live Load

σ_L = LL_s/A = 77 kips/246 in^2 = 0.313 ksi

Calculate allowable compressive stress.

σ_A = minimum (1.25 ksi, 1.25 GS) AASHTO LRFD Bridge Design Specifications 14.7.6.3.2-6/7

1.25 GS = 1.25*0.13*7.569 = 1.230 < 1.25 therefore σ_A = 1.230 ksi

$\sigma_s \leq \sigma_A$ = 0.955 < 1.230 ksi OK

Note: The design spreadsheet makes this check by comparing design bearing area to minimum allowable bearing area based on allowable compressive stress. This is done to aid the Designer when modifying bearing length and/or width.

Calculate elastomeric compressive strains.

$\varepsilon_{di} = \sigma_D / 4.8GS_i^2 = 0.642 / (4.8*0.13*7.569^2) = 0.0144$

$\varepsilon_{Li} = \sigma_D / 4.8GS_i^2 = 0.313 / (4.8*0.13*7.569^2) = 0.0088$

$\varepsilon_{Ti} = \varepsilon_{di} + \varepsilon_{Li} = 0.0180 + 0.0088 = 0.0268$

Note: Designers may use the equations above, or AASHTO LRFD Bridge Design Specifications Figure C14.7.6.3.3-1 to determine the compressive strain "ε_{di}".

Calculate compressive deflection of an internal layer due to instantaneous live load and initial dead load at the service limit state.

$\Delta_{Ti} = \varepsilon_{ti}h_{ri}$ = 0.0268*0.5 = 0.0134 ≤ 0.09 hri = 0.09*0.5 = 0.045 AASHTO LRFD Bridge Design Specifications 14.7.6.3.3

Determine allowable steel shim fatigue threshold.

ΔF_{TH} = 24 ksi AASHTO LRFD Bridge Design Specifications T6.6.1.2.5-3

Define steel shim grade.

F_y = 33 ksi AASHTO 16th Edition, interim 1997 Division II C18.4.1.1.2

h_s = 11 gage = 0.1196 in. (BOPP minimum)

Check minimum allowable steel shim thickness (h_s min.)

$h_s = 3h_{ri}\sigma_s/F_y$ = 3*0.5*0.955/33 = 0.0434 in. (service limit state)

$h_s = 2h_{ri}\sigma_L/F_{sr}$ = 2*0.5*0.313/24 = 0.0130 in. (fatigue limit state)

Use BOPP minimum h_s = 0.1196 > 0.0434 OK

Calculate total bearing height

$T = h_{rt} + (5)h_s$ = 2.5 + 5*0.1196 ~ 3.098 in.

Check stability

T < = L/3

3.098 < = 12.00/3 = 4.00 OK

Elastomeric Bearing Design

Project	Structure Number	Bearing Location

AASHTO Method A bearings are limited to a maximum out of parallelism + girder rotation of 0.01 radians. A beveled sole plate must be used if design girder slope at the bearing exceeds 0.01 radians.

Bearing Type (P - plain, R - reinforced)		R					
Bearing Type (F - fixed, E - expansion)		E					
Service Dead Load (unfactored)	DL_s	158	kips				**AASHTO**
Service Live Load w/o impact (unfactored)	LL_s	77	kips				**Article**
Design Movement (65%TM+Creep+Shrinkage+etc.)	Δ_s	1.2500	in.				**14.7.6.3.4**
Shear Modulus (G = 0.130 for 60 Durometer Elastomer)	G	0.130	ksi				**14.7.6.2**
Cover Layer Thickness (0.25 in. minimum)	h_{rc}	0.25	in.	OK h_{rc} <= 0.7 h_{ri}			**14.7.6.1**
Inner Layer Thickness (0.375 in. minimum)	h_{ri}	0.5	in.	OK h_{ri} >= 0.375			**B.O.P.P.**
Design Number of Inner Layers	n	4					
Number of Inner Layers AASHTO spec. checks	n	5		OK S_i^2 / n < 20			**14.7.6.1**
Total Elastomer Thickness	h_{rt}	2.5	in.	OK h_{rt} >= $2\Delta_s$			**14.7.6.3.4**
Bearing Length	L	12	in.				
Bearing Width	W	20.5	in.				
Bearing Area	A	246	in.^2				
Minimum Area Required Due to Stress Limits	A_{min}	191	in.^2				
Shape Factor (inner layers)	S_i	7.569			S_i	= LW/(2*hri*(L+W))	**14.7.5.1**
Allowable Compressive Stress	σ_A	1.230	ksi		σ_A	= Min (1.25, 1.25GS)	**14.7.6.3.2**
Average Live Load Compressive Stress	σ_L	0.313	ksi		σ_L	= P_{LL}/A	
Average Dead Load Compressive Stress	σ_d	0.642	ksi		σ_d	= P_{DL} /A	
Average Total Compressive Stress	σ_s	0.955	ksi	OK σ_s < σ_A	σ_s	= P_{d+LL}/A	
Average Total Compressive Strain (inner layer)	ε	0.0267	in./in.		ε	= σ_s / 4.8GS_i^2	**C14.7.5.3.6**
Instantaneous LL + Initial DL Deflection of an Internal Layer	δ	0.0134	in.	OK δ <= 0.09 h_{ri}	δ	= ε h_{ri}	**14.7.6.3.3**
Fatigue Threshold	ΔF_{th}	24.0	ksi				**14.7.6.3.7**
Shim Steel Grade (BOPP grade 33-36)	F_y	33.0	ksi				**B.O.P.P.**
Shim Thickness (BOPP min 11 gage = 0.1196 in.)	h_s	0.1196	in.	OK h_s >= $3h_{ri}\sigma_s/F_Y$ & $2h_{ri}\sigma_L/\Delta F_{TH}$			**14.7.5.3.5-1&2**
Total Bearing Height (includes shims)	T	3.0980	in.	OK T <= L/3			**14.7.6.3.6**

BEARING DESIGN MEETS ALL AASHTO & BOPP REQUIREMENTS

Spreadsheet created by Terry Holman, Nebraska Department of Roads Bridge Division, 3 / 3 / 98

Last Revision, March / 26 / 2014

3.5.5 – Cotton Duck Pad

General

- Cotton duck pads (CDP's) can accommodate very large compressive loads, and appear to provide adequate rotation capacity based on past NDOR experience.
- A PTFE sliding surface is required to accommodate horizontal movement. CDP design is governed by allowable concrete and PTFE stresses.
- A masonry plate will not be used with CDP's.
- NDOR Designers may use the CDP design spreadsheet in the Bearing Design Spreadsheet Bearings (\\drapps\Bridge\Spreadsheets\Bearing Pad Design).

Design Criteria

- CDP bearings will be designed for rotation from all sources (θ_s) = 0.015 radians.
- Rotation due to live load (θ_L) = 0.0025 radians. (based on AASHTO LRFD Bridge Design Specifications limit for live load deflection)
- Maximum pad thickness (t_{max}) = 2 in.
- Minimum pad thickness (t_{min}) = 1 in.
- Minimum pad length (L) = 4 in.
- Pad width (W) shall be adjusted as necessary to minimize pad length (L) and a minimum of 2 feet for NU girders.
- CDP bearings are designed using Service Dead Load and Live Load without impact (unfactored)
- Allowable CDP compressive stress (σ_A) = 3.0 ksi

Design Procedure

1. Determine the service dead load (DL)
2. Determine the service live load without impact (LL).
3. Calculate minimum bearing pad area required (DL + LL) / σ_A = (A_{min}).
4. Choose a pad length & width (L) (W) = A ≥ A_{min}.
5. Calculate compressive stress on CDP & concrete due to total Service load (DL + LL) / A = (σ_s).
6. Calculate allowable concrete stress (ΦP_n) (AASHTO LRFD Bridge Design Specifications 5.7.5-2).
7. Check design concrete stress $\sigma_s \leq . \Phi P_n$
8. Calculate compressive stress on CDP due to live load (σ_L) σ_L = LL / A
9. Calculate combined load compressive strain (ε_c) $\varepsilon_c = \sigma_s / E_c$.
10. * Calculate minimum thickness required for rotation under total load (t_{pc}) $t_{pc} = \theta_s L / 2(0.80)\ \varepsilon_c$.
11. * Calculate minimum thickness required for rotation under live load only (t_{pL}) $t_{pL} = \theta_L L / 2(0.20)\ \varepsilon_c$.

    * Rearranging AASHTO LRFD Bridge Design Specifications equations 14.7.6.3.5c-3&4 will solve for minimum required CDP thickness.

12. Choose a CDP thickness (t_p) $t_p \geq \max(t_{pc}, t_{pL})$.

13. Calculate strain due to rotation (ε_R) $\varepsilon_R = \theta_s L / 2\, t_p$.

14. Check maximum compressive strain due to combined compression and rotation (ε_t)

$$\varepsilon_t = \varepsilon_c + \varepsilon_R < 0.20.$$

Note:

See **General Bearing Policy** for additional design information.

3.5.6 – Confined Elastomeric (POT) Bearing

General

The confined elastomeric (POT) bearing was developed in 1959 as an alternate to heavy steel bearings. The bearing consists of a circular nonreinforced rubber pad, which is totally enclosed by a steel pot. The rubber is prevented from bulging by the pot containing it and acts similar to a fluid under high pressure.

Although experience has shown the pot bearing to be compact and efficient, it has been the most expensive bearing alternate. A final concern is the fact that satisfactory rotational operation of the bearing is not achieved until at least 25% of the working load is applied; therefore, additional consideration must be given to erection procedures.

Width and length of pedestals, if used with pot bearing, should allow for at least 6 in. clear edge distance to the base plate that will be provided by the manfacturer.

Design Criteria

The service load design information will be shown in the data table on the bearing sheets for each bearing location. More design criteria may be specified in the standard data tables at the Designer's preference.

The lateral load provided by the pot bearing manufacturer may be assumed 10 percent of the total vertical load. If required, Designers may specify more on the plans.

Pot Bearing Base Sheets

There are two base sheets available in Section 6. See 6.31 and 6.32 for Pot bearing details and level options.

3.5.7 – Bearing Pedestal Policy

General

- The Bridge Division policy is to use pedestals for all expansion bearings for girder bridges except Inverted Tee girder bridges.
- Pedestals shall provide adequate lateral resistance for expansion bearings, especially for skewed bridges and where anchor bolts are not used.
- Pedestals up to 1 ft. in height shall be poured monolithically with the abutment, pier, or bent.
- The elevation of each pedestal shall be shown on the plans.

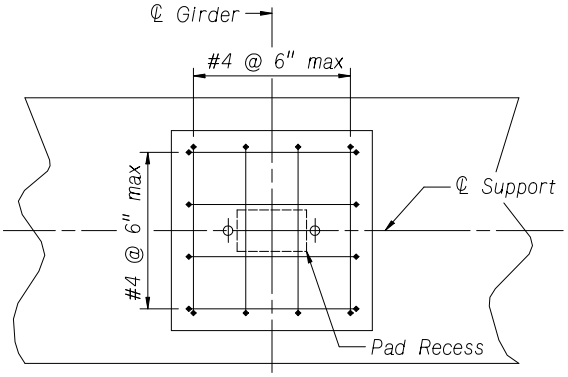

Pedestal Layout

- Pedestals must be shown on the plans.
- Pedestal minimum height is 4 in.
- Bearing pads must have 6 in. minimum clear edge distance to any vertical concrete face.
- Pedestals shall be the same width as the pier cap or abutment cap.
- When slab turndowns or concrete diaphragms are placed at supports, longitudinal edges of the pedestals should be parallel to the direction of movement. This will prevent the pedestal from interfering with the super-structure expansion / contraction.
- Bearing pads shall be recessed 1/8 in. to prevent the pad from walking.

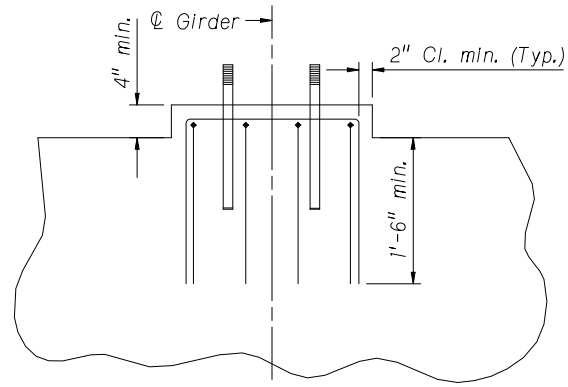

Reinforcement

- Pedestals will be provided with U-shaped steel reinforcement.
- The minimum reinforcement will be # 4 at 6 in. centers in both directions.
- The minimum concrete cover shall be 2 in. to any face of the pedestal.

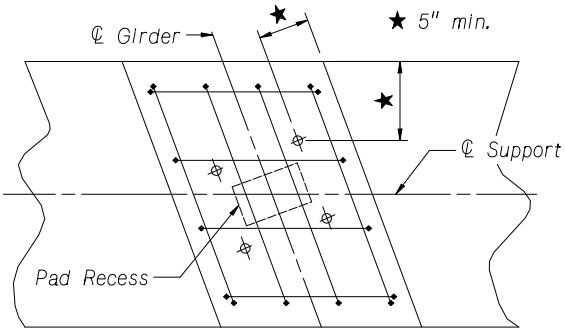

Anchor Bolts

- Anchor bolts must have a 5 in. minimum clear edge distance to the nearest vertical concrete face.

Note:

Anchor bolts shown in conjunction with pedestals are for illustration purpose only; the use of anchor bolts with pedestals should be based on the Anchor Bolts Guidelines discussed in General Bearing Policy.

3.5.8 – Bearing Details

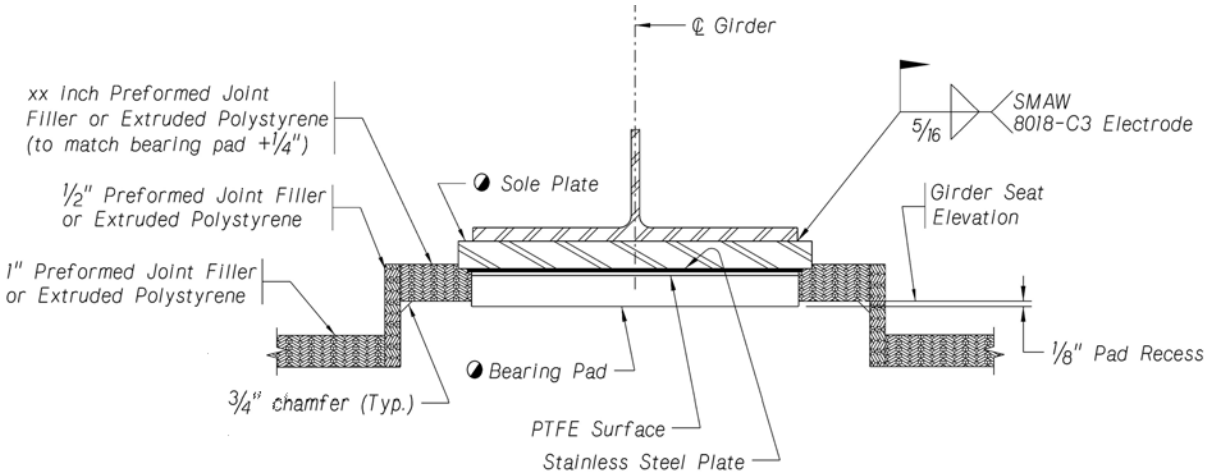

SECTION AT EXPANSION BEARING (PTFE TYPE)

AT ABUTMENTS
Not to Scale

◑ Sole Plates and Fabric Pads need to be inspected prior to installation. Please contact the Bridge Office a minimum of three weeks before contractor's scheduled installation for inspection.

AC=BRNGD1

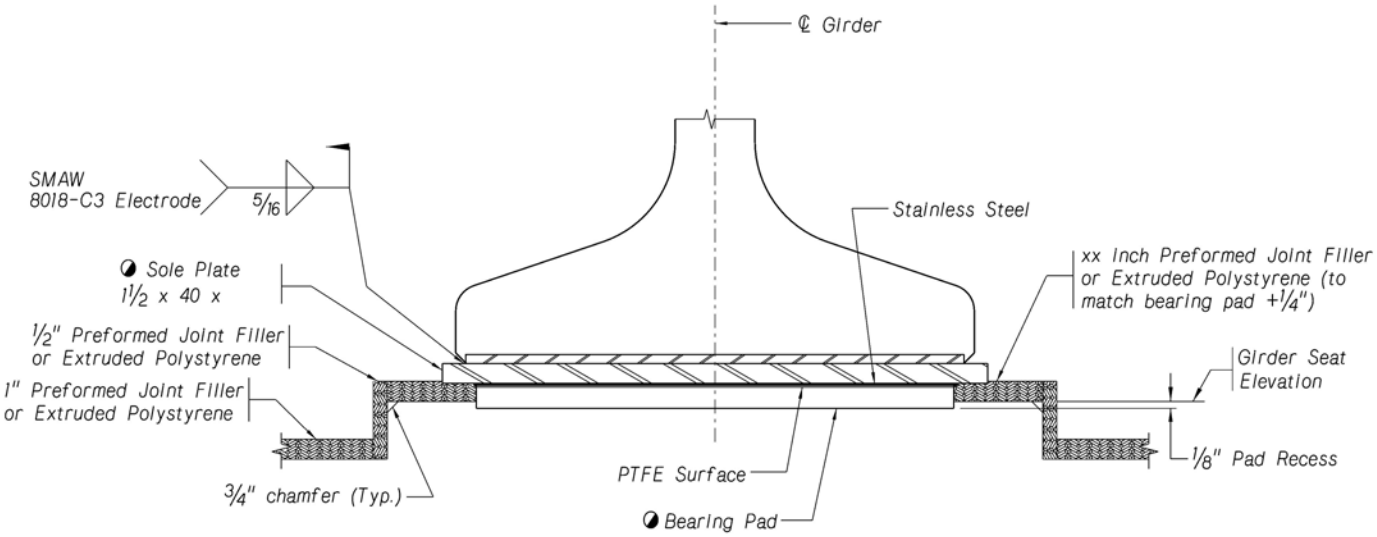

SECTION AT EXPANSION BEARING (PTFE TYPE)

AT ABUTMENTS OR PIERS
Not to Scale

◑ Sole Plates and Fabric Pads need to be inspected prior to installation. Please contact the Bridge Office a minimum of three weeks before contractor's scheduled installation for inspection.

AC=BRNGD2

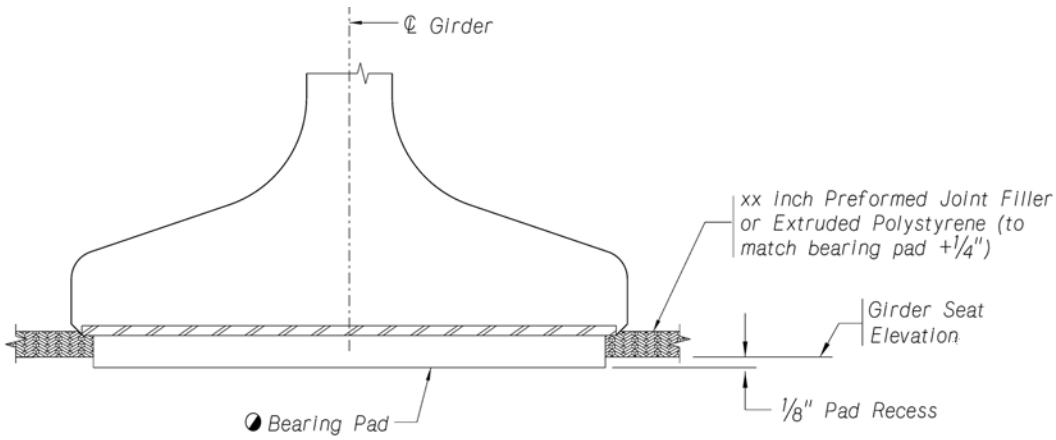

SECTION AT FIXED BEARING

AT ABUTMENTS OR PIERS
Not to Scale

◑ Fabric Pads need to be inspected prior to installation. Please contact the Bridge Office a minimum of three weeks before contractor's scheduled installation for inspection.

AC=BRNGD3

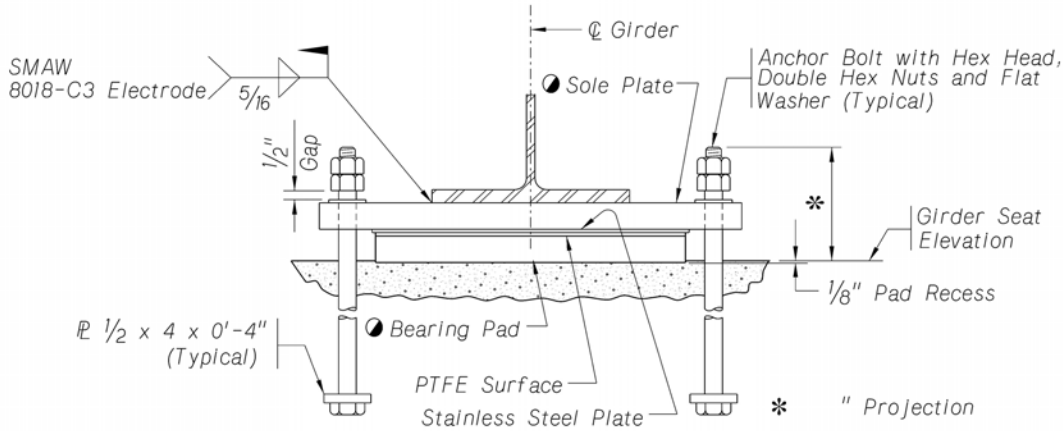

SECTION AT EXPANSION BEARING (PTFE TYPE)

Not to Scale

◑ Sole Plates and Fabric Pads need to be inspected prior to installation. Please contact the Bridge Office a minimum of three weeks before contractor's scheduled installation for inspection.

AC=TFESG

3.5.9 – Bearing Shop Plan Policy

The Bridge Division will be responsible for confirming each applicable item is shown on the Bearing Shop Plans. Checkers should refer to the Standard Specifications and Special Provisions to identify which of the following items are required on a Bearing Shop Plan.

Sole Plates (Upper Assemblies)

1. Sole plates shall conform to the requirements of ASTM A 709 Grade 50W weathering steel.
2. As an alternate, the sole plate may be grade 36 steel, metallized. If the grade 36 alternate is used, all flame cut edges of the sole plate shall be ground to reduce hardness and facilitate blast cleaning. All corners of the sole plate shall be rounded to a 1/16-inch radius. All exposed plan steel surfaces shall be blast cleaned to a near white finish and zinc metallized with a minimum thickness of 8 mils. Zinc metallizing must be performed in accordance with American Welding Society Specification AWS C2.2.
3. An ASTM A 240 Type 304 stainless steel plate (minimum 70 mils to a maximum of 80 miles thickness) shall be attached to the lower surface of expansion bearing sole plates (not applicable to fixed bearing plates).
4. The stainless steel plate in contact with the PTFE sheet shall be polished or rolled to provide a Number B mirror finish.
5. The stainless steel plate shall be attached by welding around its full perimeter.
6. Welding may be done with the shielded metal arc welding process using an AWS E308L-15 electrode, the gas metal arc process using an AWS ER308L electrode, or the gas tungsten arc welding process using an AWS ER308L fillermetal.
7. The weld shall not extend into the area of contact between the upper and lower assemblies.

Bearing Pads (Lower Assemblies)

1. Bearing pads shall consist of a plain elastomeric pad (PEP), a steel-reinforced elastomeric pad, or a cotton duck reinforced elastomeric pad (CDP), conforming to the requirements of the current AASHTO LRFD Bridge Design Specifications. The CDP shall conform to Department of Defense Specification MIL-C-882.
2. The lower assembly for CDP expansion bearings shall consist of a CDP pad with a 94 mil thick, low friction, virgin, unfilled, polytetrafluroethylene (PTFE) sheet bonded to the upper surface.
3. Bonding of the PTFE shall meet the peel test requirements (ASTM D903) of 25 lb/in at an angle of 180 degrees.
4. Bonding must be complete without air gaps under the PTFE sheet to seal out moisture and provide a smooth, flat slide surface.
5. The PTFE sheet shall conform to the requirements of the current AASHTO Bridge Design Specifications and these NDOR Standard Specications.

Flatness

1. Flatness shall be tested in accordance with Section 712 of the NDOR 1997 Standard Specifications.
2. The flatness tolerance for the PTFE sheet and the stainless steel plate shall be 0.0005 x “Nominal Dimension”.

SECTION 3.6: Safety Barrier Policies

3.6.1 – Concrete Barrier Policy

Design Criteria

The concrete barrier consists of a 2 ft. - 8 in. or 3 ft. - 6 in. high New Jersey shaped section. The height of the concrete barrier will be determined on the Bridge Data Sheet for each project. The 1 ft. - 4 in. base width of concrete barriers should be transitioned over a length of 1 ft. - 8 in., when extending existing 1ft. - 3 in. wide concrete barriers. All layout dimensions for the barrier will be measured at the gutter line (front face) of the barrier.

Reinforcement

There are two cells available for general detailing as shown below.

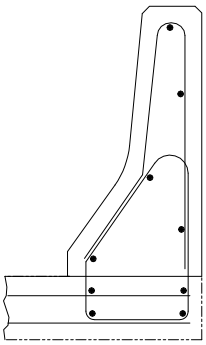

2' - 8" Concrete Barrier
AC=CBARR1
Sectional area = 2.257 sq.ft.
Unit Weight = 345.3 plf
Gutter line to C.G. = 10½"

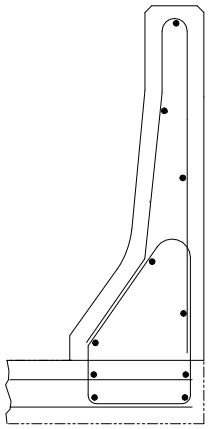

3' - 6" Concrete Barrier
AC=CBARR2
Sectional area = 2.754 sq.ft.
Unit Weight = 413.09 plf
Gutter line to C.G. = 11"

Longitudinal Bars

All longitudinal bars in the concrete barrier will be # 4 bars and placed as shown in the details above. In addition, there will be four continuous bars placed in the bridge deck as shown in the Bridge Base Sheets.

Stirrups

The 123, 125, and 126 type stirrups will match a spacing provided in the bridge deck, up to a maximum spacing of 1 ft. - 3 in. The bending diagrams for the 123 and 126 type stirrups are located in the Bill of Bars. General bending information for type 125 stirrup shown by the sketch at the is right.

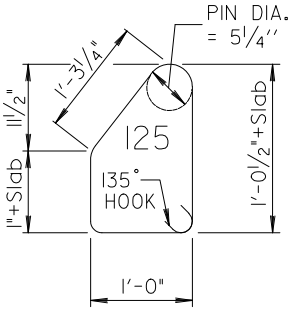

125 Closed Stirrup
(125) Length = 4'-4" + 2*
(Slab Thickness)

Bridge Widenings

Existing bridges should be investigated to determine deviations from the standard barrier layouts.

Embankment Protection

Embankments above high water elevations are subject to compounding erosion from deck drainage. Designers should be aware of erosion problems that may exist on site and should recommend appropriate action to protect embankments.

Payment

Quantities for barrier concrete and reinforcement will be indicated under the appropriate Pay Items for **"Class 47BD-4000 Concrete for Bridge"** (CY) and **"Epoxy-coated Reinforcing Steel"** (LB) as stated in the following paragraphs.

The portion of the barrier concrete placed on the bridge deck will be listed as a subitem under "Class 47BD-4000 for Bridge". The portion of the barrier steel placed on the approach slab will be included in the Pay Item, **"Epoxy Coated Reinforcing Steel for Pavement Approaches"** (LB). Concrete Barrier quantities will include the bars placed in the deck (slab).

Bridge Base Sheets

The Bridge Division has Base Sheets, in Section 6 as shown below, that contains the 2 ft. - 8 in. and 3 ft. - 6 in. Concrete Barriers on the same sheet, but on different levels.

BARRIERS/RAILS/FENCES

Concrete Barrier 2'-8", on slab, with lighting	v8i_conc_barrier	6.50
Concrete Barrier 3'-6", on deck, with block out	v8i_conc_barrier	6.51
Open Concrete Rail on Bridge Approach, on slab	v8i_conc_rail	6.52
Open Concrete Rail on Bridge Deck, on slab	v8i_conc_rail	6.53
Closed Concrete Rail on Bridge Approach, on deck, with block out	v8i_conc_rail	6.54
Closed Concrete Rail on Bridge Deck, on deck, with lighting	v8i_conc_rail	6.55
Partial Closed Concrete Rail on Bridge Deck, on deck, with lighting	v8i_conc_rail	6.56
2'-10" Open Concrete Rail on Approach, on slab	v8i_nu_rail	6.57
2'-10" Open Concrete Rail on Bridge Deck, on slab	v8i_nu_rail	6.58
2'-10" Closed Rail on Approach/Open Rail on Deck, on slab	v8i_nu_rail	6.59
2'-10" Closed Concrete Rail, on inverted tee	v8i_nu_rail	6.60
3'-6" Open Concrete Rail on Approach, deck, with lighting	v8i_nu_rail	6.61
3'-6" Open Concrete Rail on Bridge Deck, deck, with lighting	v8i_nu_rail	6.62
3'-6" Closed Rail on Approach/Open Rail on Bridge Deck, on deck	v8i_nu_rail	6.63
3'-6" Closed Concrete Rail, on deck, with lighting	v8i_nu_rail	6.64
Median Barrier for 3'-6" Rail	v8i_nu_rail	6.65
Transitioning Closed Concrete Rail	v8i_nu_trans_rail	6.66
Pedestrian Railing (Chain Link Type), 32" conc. barrier, galvanized	v8i_chain_link	6.67
Pedestrian Barrier on 29" Concrete Rail	v8i_ped_rail	6.68
Pedestrian Barrier on 32" Concrete Barrier	v8i_ped_rail	6.69
Pedestrian Barrier on 34" Concrete Rail	v8i_ped_rail	6.70
UPRR – Modified Closed Concrete Rail on Bridge Deck w/ lighting	v8i_uprr	6.71
UPRR – 6'-0" Pedestrian Barrier (Chain Link), galvanized	v8i_uprr	6.72
Pedestrian Barrier on Concrete Rail	v8i_uprr	6.73
RR – Railroad requirements	v8i_railroad	6.74
Details for RR Fence Attachment to Concrete Rail	v8i_rail_fence	6.75

Levels:

LEVEL 50 = Bridge Deck on Girders

LEVEL 51 = Concrete Slab Bridge Deck

LEVEL 52 = Bridge Deck on Double Tee

LEVEL 53 = Lighting

LEVEL 54 = w/Block Out

LEVEL 55 = 2' - 8" Concrete Barrier

LEVEL 56 = 3' - 6" Concrete Barrier

LEVEL 57 = w/o Block out

2’ - 8” Concrete Barrier – Quantities on Approach Slabs

If the base sheet is not altered, the following quantities apply:

Concrete for 2’ - 8” Barrier on Approach Slabs

Buttress =	1.28	CY
Transition Shape =	0.80	CY
Barrier Shape =	0.59	CY
Subtotal for one End =	2.67	CY
Total = Sub x 4 ends =	10.68	CY

This Bill of Bars Table is available as a cell for detailers to use.

2'-8" Concrete Barrier on Approach Slabs (Standard Layout, FOUR ENDS)											
MARK	NO.	LENGTH	TYPE	A	B	C	D	E	PIN	HOOK	Lb
N690	176	5'-6"	104	2'-9"	2'-9"				4 1/2"		1553
N590	32	14'-4"	125	4'-8"	1'-6"	6'-1"	10"	1'-5"	2 1/2"	5 1/2"	478
N591	32	11'-9"	107	4'-7"	10"				2 1/2"	5 1/2"	392
N593	64	6'-6"	104	3'-3"	3'-3"				2 1/2"		434
N594	24	6'-7"	125	1'-0"	1'-5"	2'-1"	1'-0"	1'-1"	2 1/2"	5 1/2"	165
N492	28	4'-11"	123	1'-0"	1'-5"	2'-5"	5"	11"	2"		92
N493	56	9'-8"	STR								362
										Total (lb) =	3475

2’ - 8” Concrete Barrier on Bridge Deck

Bold boxes in the Bill of Bar list indicate information that varies based on the EOF to EOF length and the thickness of the bridge deck.

Cross Sectional Area = 2.257 Sq. Ft. / Ft..

This Bill of Bars Table is available as a cell for detailers to use.

2'-8" Concrete Barrier on the Bridge (Standard Layout, TWO SIDES)											
MARK	**NO.**	**LENGTH**	**TYPE**	**A**	**B**	**C**	**D**	**E**	**PIN**	**HOOK**	**Lb**
S590	**166**	5'-5"	125	9"	1'-2"	1'-7"	1'-0"	10"	2 1/2"	5 1/2"	**927.4**
S490	**170**	4'-11"	123	1'-0"	1'-5"	2'-5"	5"	11"	2"		**558.6**
S491	10	**102'-1"**	STR								**682.3**
										Total (lb) =	**2178**

3’ - 6” Concrete Barrier – Quantities on Approach Slabs

If the base sheet is not altered, the following quantities apply:

Concrete for 3’ - 6” Barrier on Approach Slabs

Buttress =	1.28	CY
Transition Shape =	0.86	CY
Barrier Shape =	0.67	CY
Subtotal for one End =	2.81	CY
Total = Sub x 4 ends =	11.24	CY

3’-6” Concrete Barrier on the Bridge (Standard Layout, Four Ends)											
Mark	**No.**	**Length**	**Type**	**A**	**B**	**C**	**D**	**E**	**Pin**	**Hook**	**Lb.**
*N690	176	5’-10”	104	3’-2”	2’-8”				4½”		1542.1
*N590	24	14’-4”	125	4’-8”	1’-6”	6’-1”	10”	1’-5”	2½”	5½”	354.1
*N591	40	11’-9”	107	4’-7”	10”				2½”	5½”	490.3
N593	64	7’-4”	107	3’-3”	4’-1”	Max.			2½”		461.7
					3’-3”	Min.			2½”		461.7
N594	24	6’-8”	125	1’-3”	1’-2”	2’-1”	1’-0”	10”	2½”	5½”	166.9
*N490	12	1’-6”	STR								12.0
N492	28	6’-5”	STR								120.0
N493	72	8’-10”	STR								424.8
* Buttress bars										Total (Lb) =	3572

Mark	Max. Length	Min. Length	No. Sets	Bars Per Set
N593	7’-4”	6’-6”	8	8

3’ - 6” Concrete Barrier on Bridge Deck

Bold boxes in the Bill of Bar list indicate information that varies based on the EOF to EOF length and the thickness of the bridge deck.

Cross Sectional Area = 2.761 Sq. Ft. / Ft..

3’-6” Concrete Barrier on Approach Slabs (Standard Layout, Two Sides)											
Mark	**No.**	**Length**	**Type**	**A**	**B**	**C**	**D**	**E**	**Pin**	**Hook**	**Lb.**
S590	**166**	5’-8”	125	9”	1’-2”	1’-7”	1’-0”	10”	2½”	5½”	**941.9**
S490	**170**	6’-6”	126						2”		**719.6**
*S491	12	**102’**	STR								**817.6**
										Total (Lb) =	**2479.1**

3.6.2 – Concrete Rail Policy

General Design Criteria

1. Use 42” NU Rail on Interstate Structures.
2. Use 42” NU Rail on horizontally curved and high truck traffic State Highways.
3. Use 42” NU Rail as a minimum over Railroads (See Section 1.2 – Railroad Barriers)
4. Use 34” NU Rail on all other State Highways and roadway crossings.
5. Use 29” Nebraska Rail on allowable Non-System Bridges.

42” rail is applicable for TL-5, 34” and 29” allow for up to 2” future overlays on TL-4 and TL-3.

Open Concrete Rail

Open rail layouts will use the following design criteria

Post spacing CL to CL = 8’ - 0”

Vertical and horizontal layout dimensions shall be measured at the front face of rail.

Rail Height	Lb./Lin.Ft.
OPEN	
29”	270
34”	366
42”	441
CLOSED	
29”	382
34”	448
42”	524
42” Median	873

Closed Concrete Rail

Closed Concrete Rail shall be used on all approach sections unless it would cause runoff in the driving lane. Roadway Design will provide inlets and surfacing to handle the drainage. Closed Concrete Rail should be used from end to end when adjacent to a sidewalk. The Designer should consider using the closed section only where required on the bridges over recreational trails, sidewalks, vehicle, or railroad traffic.

Vertical Post Reinforcement

The height of the vertical leg of the “L” shaped reinforcement will be sized to fit the bridge deck. The vertical leg will be designed to provide 3 in. minimum clearance to the top of the rail. In all applications, the bottom leg will match the transverse steel provided in the concrete slab. Bars types shall be provided for cross slopes greater than 2.5% to eliminate field bending of the “L”.

Rail systems will be reinforced as shown on the Concrete Rail Base Sheets. Full or partial closed rail systems should modify layouts based on the typical reinforcements shown in the Concrete Rail Base Sheets, see Section 6.

The following details illustrate the various types of Concrete Rails/Barriers. Each one has a cell available for use in detailing.

Typical Rail Sections

NU Rails

Steel forms are required for the 42” NU Rail and for the 34” NU Rail with the 4 ½” chamfer.

Bridge Widening

Existing bridges should be investigated to determine deviations from the standard rail layouts.

Embankment Protection

Embankments above high water elevations are subject to compounding erosion from Open Concrete Rail drainage. Designers should be aware of erosion problems that may exist on-site and should recommend appropriate action to protect stream embankments.

Payment

Quantities for rail reinforcement and concrete will be indicated under the appropriate Pay Items for **"Class 47BD-4000 Concrete for Bridge"** (CY) and **"Epoxy Coated Reinforcing Steel"** (LB). In other words, quantities for the portion of concrete rail placed on the bridge deck will be listed as subitems under the bridge Pay Items. Quantities for the portion of concrete rail placed on the bridge approach slab will be listed as subitems under the Pay Items for the approach slab.

Bridge Base Sheets

The NU Rail Base Sheet in Section 6, contains seven sheets as described below.

BARRIERS/RAILS/FENCES

Concrete Barrier 2'-8", on slab, with lighting	v8i_conc_barrier	6.50
Concrete Barrier 3'-6", on deck, with block out	v8i_conc_barrier	6.51
Open Concrete Rail on Bridge Approach, on slab	v8i_conc_rail	6.52
Open Concrete Rail on Bridge Deck, on slab	v8i_conc_rail	6.53
Closed Concrete Rail on Bridge Approach, on deck, with block out	v8i_conc_rail	6.54
Closed Concrete Rail on Bridge Deck, on deck, with lighting	v8i_conc_rail	6.55
Partial Closed Concrete Rail on Bridge Deck, on deck, with lighting	v8i_conc_rail	6.56
2'-10" Open Concrete Rail on Approach, on slab	v8i_nu_rail	6.57
2'-10" Open Concrete Rail on Bridge Deck, on slab	v8i_nu_rail	6.58
2'-10" Closed Rail on Approach/Open Rail on Deck, on slab	v8i_nu_rail	6.59
2'-10" Closed Concrete Rail, on inverted tee	v8i_nu_rail	6.60
3'-6" Open Concrete Rail on Approach, deck, with lighting	v8i_nu_rail	6.61
3'-6" Open Concrete Rail on Bridge Deck, deck, with lighting	v8i_nu_rail	6.62
3'-6" Closed Rail on Approach/Open Rail on Bridge Deck, on deck	v8i_nu_rail	6.63
3'-6" Closed Concrete Rail, on deck, with lighting	v8i_nu_rail	6.64
Median Barrier for 3'-6" Rail	v8i_nu_rail	6.65
Transitioning Closed Concrete Rail	v8i_nu_trans_rail	6.66
Pedestrian Railing (Chain Link Type), 32" conc. barrier, galvanized	v8i_chain_link	6.67
Pedestrian Barrier on 29" Concrete Rail	v8i_ped_rail	6.68
Pedestrian Barrier on 32" Concrete Barrier	v8i_ped_rail	6.69
Pedestrian Barrier on 34" Concrete Rail	v8i_ped_rail	6.70
UPRR – Modified Closed Concrete Rail on Bridge Deck w/ lighting	v8i_uprr	6.71
UPRR – 6'-0" Pedestrian Barrier (Chain Link), galvanized	v8i_uprr	6.72
Pedestrian Barrier on Concrete Rail	v8i_uprr	6.73
RR – Railroad requirements	v8i_railroad	6.74
Details for RR Fence Attachment to Concrete Rail	v8i_rail_fence	6.75

LEVEL 50 = Bridge Deck on Girders

LEVEL 51 = Concrete Slab Bridge Deck

LEVEL 52 = Bridge Deck on Double Tee

LEVEL 53 = Lighting

LEVEL 54 = 1" PJF

LEVEL 55 = 2" PPF

Sheet A

Shows the details for a 42” Closed Concrete Rail on the approach section and 42” Open Concrete Rail on bridge deck.

Sheet B

Shows the details for a 34” Closed Concrete Rail on the approach section and 34” Open Concrete Rail on bridge deck.

Sheet C

Shows the details for the 34” Open Concrete Rail on the approach sections.

Sheet D

Shows the details for the 34” Open Concrete Rail on the bridge deck. The following information must be provided by the Designer on the base sheet:

1. Length of bridge from EOF to EOF.
2. Length of variable first post spacing on the bridge.
3. Number of 8 ft. post spaces.
4. Vertical post reinforcement detail Section A-A:

   Deck on girders ..... Level 50
   Slab bridge ..... Level 51
   Inverted Tee Girders ..... Level 52

5. Rail vertical reinforcement, placed in the bridge deck (slab), must be customized by the Designer to fit the bridge deck.

Sheet E

Shows the details for a 42” Open Concrete Rail on the approach sections.

Sheet F

Shows the details for a 42” Open Concrete Rail on the bridge deck.

Sheet G

Shows the details for a 34” Closed Concrete Rail on the approach section and bridge deck.

Sheet H

Shows the details for a 42” Closed Concrete Rail on the approach section and bridge deck.

Sheet I

Shows the details for 42” Median Barrier on the approach section and bridge deck.

34” Open Concrete Rail – Quantities on Approach Sections.

If the base sheet is not altered, the following quantities apply:

Concrete for Open Rail on Approach Sections

Buttress =	1.28	CY
Transition shapes =	0.07	CY
Rail =	0.82	CY
One 2’ - 6” Post =	0.07	CY
One 4’ - 0” Post =	0.12	CY
Subtotal (one end) =	2.36	CY
Total = Sub x 4 =	9.44	CY

BILL OF BARS

MARK	NO.	LENGTH	TYPE	"A"	"B"	"C"	"D"	"E"	"F"		PIN	HOOK	WEIGHT LB
N692	104	5'-10"	104	2'-11"	2'-11"						4½"		911
N693	148	6'-10"	104	3'-5"	3'-5"						4½"		1,519
N590	64	14'-5"	130	4'-8"	0'-10"	6'-1"	0'-5"	1'-6"	1'-5"		2½"	5½"	962
N591	32	15'-6"	STR.										517
N492	40	5'-10"	104	2'-11"	2'-11"						3"		156
N391	60	5'-2"	107	1'-5"	0'-10"						1½"	4"	117
N392	24	4'-8"	130	1'-1½"	0'-6½"	1'-6"	0'-5"	0'-5"	0'-4½"		1½"	4"	42
N393	24	7'-8"	130	2'-7½"	0'-6½"	3'-0"	0'-5"	0'-5"	0'-4½"		1½"	4"	69

SUBTOTAL = LB

NOTE: FOR PIN DIAMETERS, HOOK LENGTHS & BENDING DIAGRAMS SEE SHEET OF .

TOTAL = 4,293 LB

34” Open Concrete Rail - Quantities on Bridge Deck

Bold boxes in the Bill of Bar list indicate information that varies based on the EOF to EOF length and the thickness of the bridge deck.

Concrete for Open Rail on the Bridge

Rail (One Side) =	0.08	CY/LF
Volume of 2’ - 6” Posts =	0.07	CY/Post
Volume of 4’ - 0” End Posts =	0.12	CY/Post

* DIMENSIONS FOR 7½" & 8" DECKS ON GIRDERS ONLY

BILL OF BARS

MARK	NO.	LENGTH	TYPE	"A"	"B"	"C"	"D"	"E"	"F"		PIN	HOOK	WEIGHT LB
S690		* 6'-4"	104	* 3'-2"	* 3'-2"						4½"		
S592	16		STR										
S492		5'-10"	104	2'-11"	2'-11"						3"		
S390		4'-8"	130	1'-1½"	0'-6½"	1'-6"	0'-5"	0'-5"	0'-4½"		1½"	4"	
S391		5'-2"	107	1'-5"	0'-10"						1½"	4"	
S392		7'-8"	130	2'-7½"	0'-6½"	3'-0"	0'-5"	0'-5"	0'-4½"		1½"	4"	

SUBTOTAL = LB

NOTE: FOR PIN DIAMETERS, HOOK LENGTHS & BENDING DIAGRAMS SEE SHEET OF .

TOTAL = LB

42” Open Concrete Rail – Quantities on Approach Sections.

If the base sheet is not altered, the following quantities apply:

Concrete for Open Rail on Approach Slabs

Buttress =	1.47	CY
Transition shapes =	0.05	CY
Rail =	1.49	CY
One 2’ - 6” Post =	0.07	CY
One 4’ - 0” Post =	0.12	CY
Subtotal (one end) =	3.20	CY
Total = Sub x 4 =	12.80	CY

B I L L O F B A R S

MARK	NO.	LENGTH	TYPE	"A"	"B"	"C"	"D"	"E"	"F"		PIN	HOOK	WEIGHT LB
N691	32	15'-10"	STR										761
N692	168	5'-10"	104	2'-11"	2'-11"						4½"		1,472
N693	180	6'-10"	104	3'-5"	3'-5"						4½"		1,847
N694	8	19'-6"	STR										234
N695	8	6'-1"	STR										73
N590	64	14'-5"	130	4'-8"	0'-10"	6'-1"	0'-5"	1'-6"	1'-5"		2½"	5½"	962
N490	196	4'-4"	131	2'-0"	0'-4"	2'-0"	0'-3"				2"		567
N491	224	4'-7"	107	1'-1"	0'-10"						2"	4½"	686
N492	24	4'-9"	130	1'-1½"	0'-6½"	1'-6"	0'-5"	0'-5"	0'-4½"		2"	4½"	76
N493	24	7'-9"	130	2'-7½"	0'-6½"	3'-0"	0'-5"	0'-5"	0'-4½"		2"	4½"	124

SUBTOTAL = LB

NOTE: FOR PIN DIAMETERS, HOOK LENGTHS & BENDING DIAGRAMS SEE SHEET OF .

TOTAL = 6,802 LB

42” Open Concrete Rail - Quantities on Bridge Deck

Bold boxes in the Bill of Bar list indicate information that varies based on the EOF to EOF length and the thickness of the bridge deck.

Concrete for Open Rail on the Bridge

Rail (One Side) =	0.10	CY/LF
Volume of 2’ - 6” Posts =	0.07	CY/Post
Volume of End Posts =	0.12	CY/Post

* DIMENSIONS FOR 7½" & 8" DECKS ON GIRDERS ONLY

BILL OF BARS

MARK	NO.	LENGTH	TYPE	"A"	"B"	"C"	"D"	"E"	"F"		PIN	HOOK	WEIGHT LB
S690		* 6'-4"	104	* 3'-2"	* 3'-2"						4½"		
S692	20		STR										
S490		7'-9"	130	2'-7½"	0'-6½"	3'-0"	0'-5"	0'-5"	0'-4½"		2"	4½"	
S491		4'-9"	130	1'-1½"	0'-6½"	1'-6"	0'-5"	0'-5"	0'-4½"		2"	4½"	
S492		4'-7"	107	1'-1"	0'-10"						2"	4½"	
S493		4'-4"	131	2'-0"	0'-4"	2'-0"	0'-3"				2"		

SUBTOTAL = LB

NOTE: FOR PIN DIAMETERS, HOOK LENGTHS & BENDING DIAGRAMS SEE SHEET OF .

TOTAL = LB

34” Closed Concrete Rail –Quantities on Approach Section

If the base sheet is not altered, the following quantities apply:

Concrete for Closed Rail on Approach Slabs

One Buttress =	1.34	CY
One Transition shape =	0.03	CY
One Rail =	1.65	CY
Subtotal (one end) =	3.02	CY
Total = Sub x 4 =	12.08	CY

BILL OF BARS

MARK	NO.	LENGTH	TYPE	"A"	"B"	"C"	"D"	"E"	"F"		PIN	HOOK	WEIGHT LB
N692	92	5'-10"	104	2'-11"	2'-11"						4½"		806
N693	96	6'-10"	104	3'-5"	3'-5"						4½"		985
N590	32	14'-5"	130	4'-8"	0'-10"	6'-1"	0'-5"	1'-6"	1'-5"		2½"	5½"	481
N591	32	11'-11"	107	4'-8"	0'-10"						2½"	5½"	398
N592	40	17'-0"	STR										709
N593	60	5'-10"	104	2'-11"	2'-11"						3¾"		365
N594	60	6'-10"	104	3'-5"	3'-5"						3¾"		428
N391	32	5'-2"	107	1'-5"	0'-10"						1½"	4"	62

SUBTOTAL = LB

NOTE: FOR PIN DIAMETERS, HOOK LENGTHS & BENDING DIAGRAMS SEE SHEET OF .

TOTAL = 4,234 LB

34” Closed Concrete Rail - Quantities on Bridge Deck

Bold boxes in the Bill of Bar list indicate information that varies based on the EOF to EOF lengthand the thickness of the bridge deck.

Concrete for Closed Rail on the Bridge

(One side of Rail) = 0.11 CY/LF

◑ S592 BARS ARE NOT REQUIRED ON INVERTED TEE BRIDGES
✻ DIMENSIONS FOR 7½" & 8" DECKS ON GIRDERS ONLY

BILL OF BARS													WEIGHT
MARK	NO.	LENGTH	TYPE	"A"	"B"	"C"	"D"	"E"	"F"		PIN	HOOK	LB
S591		✻ 5'-10"	104	✻ 2'-11"	✻ 2'-11"						3¾"		
◑S592		✻ 6'-4"	104	✻ 3'-2"	✻ 3'-2"						3¾"		
S593	20		STR										
S391		5'-2"	107	1'-5"	0'-10"						1½"	4"	
											SUBTOTAL =		LB
NOTE: FOR PIN DIAMETERS, HOOK LENGTHS & BENDING DIAGRAMS SEE SHEET OF .											TOTAL =		LB

42” Closed Concrete Rail - Quantities on Approach Section

If the base sheet is not altered the following quantities apply.

Concrete for Closed Rail on Approach Slabs

One Buttress =	1.47	CY
Transition Shape =	0.03	CY
One Rail =	1.91	CY
Subtotal for one End =	3.41	CY
Total = Sub x 4 ends =	13.64	CY

BILL OF BARS

MARK	NO.	LENGTH	TYPE	"A"	"B"	"C"	"D"	"E"	"F"		PIN	HOOK	WEIGHT LB
N691	32	17'-0"	STR										817
N692	92	5'-10"	104	2'-11"	2'-11"						4½"		806
N693	96	6'-10"	104	3'-5"	3'-5"						4½"		985
N694	8	19'-7"	STR										235
N695	8	6'-1"	STR										73
N590	32	14'-5"	130	4'-8"	0-10"	6'-1"	0'-5"	1'-6"	1'-5"		2½"	5½"	481
N591	32	11'-11"	107	4'-8"	0'-10"						2½"	5½"	398
N592	92	5'-10"	104	2'-11"	2'-11"						3¾"		560
N593	92	6'-10"	104	3'-5"	3'-5"						3¾"		656
N490	172	4'-4"	131	2'-0"	0'-4"	2'-0"	0'-3"				2"		498
N491	184	4'-7"	107	1'-1"	0'-10"						2"	4½"	563
N492	24	16'-4"	STR										262

SUBTOTAL = LB

NOTE: FOR PIN DIAMETERS, HOOK LENGTHS & BENDING DIAGRAMS SEE SHEET OF .

TOTAL = 6,334 LB

42” Closed Concrete Rail - Quantities on Bridge Deck

Bold boxes in the Bill of Bar list indicate information that varies based on the EOF to EOF length and the thickness of the bridge deck.

One Rail = 0.13 CY/LF

* DIMENSIONS FOR 7½" & 8" DECKS ON GIRDERS ONLY

BILL OF BARS

MARK	NO.	LENGTH	TYPE	"A"	"B"	"C"	"D"	"E"	"F"		PIN	HOOK	WEIGHT LB
S691	20		STR										
S591		* 6'-4"	104	* 3'-2"	* 3'-2"						3¾"		
S490		4'-4"	131	2'-0"	0'-4"	2'-0"	0'-3"				2"		
S491		4'-7"	107	1'-1"	0'-10"						2"	4½"	
S492	12		STR										

SUBTOTAL = LB

NOTE: FOR PIN DIAMETERS, HOOK LENGTHS & BENDING DIAGRAMS SEE SHEET OF .

TOTAL = LB

42” Concrete Median Barrier - Quantities on Approach Section

If the base sheet is not altered the following quantities apply.

One Barrier = 0.22 CY/LF

BILL OF BARS

MARK	NO.	LENGTH	TYPE	"A"	"B"	"C"	"D"	"E"	"F"		PIN	HOOK	WEIGHT LB
N681	20		STR										
N682		3'-4"	STR										
N683	20	19'-7"	STR										
N485	12		STR										
N486		4'-5"	132	1'-10"	0'-9"	1'-10"	0'-3"	0'-3"			2"		
N487		6'-11"	107	1'-5"	1'-8"						2"	4½"	
N488	12		STR										

SUBTOTAL = LB

NOTE: FOR PIN DIAMETERS, HOOK LENGTHS & BENDING DIAGRAMS SEE SHEET OF .

TOTAL = LB

42” Concrete Median Barrier - Quantities on Bridge Deck

If the base sheet is not altered the following quantities apply.

One Barrier = 0.22 CY/LF

BILL OF BARS													WEIGHT
MARK	NO.	LENGTH	TYPE	"A"	"B"	"C"	"D"	"E"	"F"		PIN	HOOK	LB
S681			STR										
S682	20	9'-10"	STR										
S482	6		STR										
S483		4'-5"	132	1'-10"	0'-9"	1'-10"	0'-3"	0'-3"			2"		
S484		6'-11"	107	1'-5"	1'-8"						2"	4½"	
S485	10		STR										
												SUBTOTAL =	LB
												TOTAL =	LB

NOTE: FOR PIN DIAMETERS, HOOK LENGTHS & BENDING DIAGRAMS SEE SHEET OF .

3.6.3 – Pedestrian Barrier Rail Policy

Layout

All pedestrian barrier rails will be designed to accommodate bicycle traffic. The maximum post spacing will be 8 ft., except at expansion joints.

At expansion joints, the posts on either side of the joint will be spaced preferably at a maximum of 5 ft. between posts.

Base Sheets

Two base sheets are currently available which show a Pedestrian Barrier Rail placed on a Closed Concrete Rail or a 2 ft. - 8 in. New Jersey section. (see Section 6)

Payment

Pedestrian Barrier Rail shall be paid for using the Pay Item, **"Pedestrian Barrier Rail"** (LF). Measurement shall be indicated on the plans as the distance (in ft) between the outermost bolts placed in the concrete rail as shown on the base sheet.

3.6.4 – Pedestrian Railing (Chain-Link Type)

Layout

The Bridge Division's current policy is to provide an 8 ft. - 3 in. high, curved chain-link fence on all bridges that are over traffic or railroads. This is to provide protection from falling debris for the traffic below. Chain-link fence will be a straight 5 ft. high section when bridges are not over traffic or railroad. All fence layouts should be located on the bridge using dimensions from the end(s) of the bridge floor at the CL of the fence. The maximum post spacing will be 8 ft. for all posts. For consistent bracing details, the first 8 ft. post spacing of the 8 ft. - 3 in. high pedestrian rail will remain unchanged and the second post spacing should vary to accommodate any odd lengths required.

Expansion Joints

Expansion joints will be provided in the top rail and handrail at all bridge expansion locations in the bridge deck. Typical fence bracing should be provided on both sides of expansion joints.

Expansion gaps should be designed for a fixed dimension (i.e., no adjustments for temperature at time of installation). Expansion gaps greater than 2 in. should use a longer pipe on the inside of the joint. All expansion gap information must be added to the base sheet by the Designer. It is not shown by default, since there is not an expansion joint required in the base sheet fence layout.

Base Sheets

One base sheet is currently available for the 8 ft. - 3 in. high pedestrian rail (chain-link type) which has 5 ft. high sections at the ends. Alternate sketches level 50 for New Jersey section and level 51 for Closed Concrete Rail. See Section 6 for base sheet information. The following minimum information will be provided in the base sheets.

1. The clear dimension of the sidewalk should be indicated on the "Typical Section Thru Fence".
2. "Typical Section Thru Fence" will indicate the proper traffic barrier used on the bridge project.
3. The fence layout will indicate the odd post spacing and number of 8 ft. spaces.
4. The Limits of Pay Quantity for **"Pedestrian Railing (Chain-link Type)"** (LF) will equal the sum of the dimensions shown for the fence.
5. The expansion gap distance should be shown in the "Expansion Joint or Splice Detail" when required. This information should be placed with the note for intermediate splice dimensions.

Payment

Measurement will be indicated on the plans as the distance between the outermost CL of the fence posts (1¼ in. diameter pipe), measured along the CL fence (as shown on the base sheet). If fences of different lengths are required on the same bridge, the pay quantity should indicate the different lengths on the base sheet. The total fence length required for the bridge project will be shown in the bridge "Quantities" on the Front Sheet.

8 ft. - 3 in. high chain-link fence, which includes 5 ft. high-end sections, will be paid for using the standard Pay Item number 6404.00, **"Pedestrian Rail (Chain-link Type)"** (LF).

5 ft. high chain-link fence will be paid for using the standard Pay Item number 6404.02, **"Pedestrian Rail (Chain-link Type)"** (LF).

Section 4
Bridge Substructure

SECTION 4.1: General Substructure Design
4.1.1 - Geology Sheet Policy 4.02
4.1.2 - Bearing Piles Policy 4.04
4.1.3 - Tie Rod Policy 4.08
4.1.4 - Excavation of Abutments and Bents 4.10
4.1.5 - Spread Footing Design Policy 4.11
4.1.6 - Substructure Concrete Policy 4.12
4.1.7 - Scour at Bridge Sites 4.13

SECTION 4.2: Abutments
4.2.1 - Abutment Policy 4.17
4.2.2 - Abutment Drainage Policy 4.18
4.2.3 - Granular Backfill Policy 4.19
4.2.4 - Expanded Polystyrene (EPS) Geofoam 4.22
4.2.5 - Grade Beam Policy 4.23
4.2.6 - Wing Policy 4.24

SECTION 4.3: Piers/Bents
4.3.1 - Pier and Bent Policy 4.26

SECTION 4.4: Sheet Piling
4.4.1 - Steel Sheet Piling Policy 4.30

SECTION 4.1: GENERAL SUBSTRUCTURE DESIGN

4.1.1 – Geology Sheet Policy

Plans shall provide at least one sheet for the purpose of showing soil profile, pile layout, and pile design information.

General Items

- Standard notes for bearing piles and sheets piles.
- Notes specified by the Geotechnical Engineer.
- Standard Plan notes for concrete sheet piles or prestressed piling.
- Steel pile splice details, see Bearing Pile Policy.

Pile Data Tables

The following CAD cells shall be used by the Geotechnical Engineer and Designers to specify the pile driving and pile data information on the Geology Sheet.

PILE DATA						
LOCATION	PILE NUMBER	CUT-OFF ELEVATION	MINIMUM PENETRATION BELOW CUT- OFF (feet)	PILE ORDER LENGTH (feet)	DESIGN PILE BEARING (kips/pile)	PILE TYPE
.	.	.	.	.	.	.
.	.	.	.	.	.	.

AC=PILDAT

PILE DRIVING DATA						
LOCATION	PILE TYPE	CUT-OFF ELEVATION	AVERAGE BEARING BASED ON CURRENT FORMULA (kips/PILE)	HAMMER TYPE	RAM WEIGHT (lbs)	AVERAGE FALL OF RAM (feet)
.	.	.	.	.	.	.
.	.	.	.	.	.	.

AC=PILOLD

Elevation View of the Soil Profile

- The lengths of bearing and sheet piles must be shown to scale. The soil profile should show the type of soil at the tip of the pile, if the data is available.
- Station and elevation at the supports and CL of bridge.
- Soil boring log: water table, blow counts, soil type, number and date.
- Show any MSE wall offsets, see MSE Wall Policy.
- Show and label Natural Ground profile.

Bridge Pile Layout

The pile layout must contain all the geometrics to drive piling without referencing to other sheets. This includes but is not limited to the following information:

- North arrow
- Direction of flow (stream crossings).
- Skew at each support.
- Soil borings numbered, dated, offset from CL roadway, and station.
- CL of substructures, wings, sheet piling, railroads, utilities, and temporary shoring.
- Stations at CL of roadway for substructures and railroads.
- Base line layout for curved structures.
- Show but do not dimension existing piling.
- Limits of phased construction for substructure.
- Span dimensions.
- Interior and overall pile dimensions.
- Numbered piling at supports that indicate batter when required.
- For MSE walls, indicate CMP sleeve (Typ.), see MSE Wall Policy.
- Sheet pile layout:
  - Overall length along CL.
  - Offset dimension from CL roadway, abutments, and wings.

Soil Profile

For uniformity purposes, the following soils symbols, available in AC=GEOLNG in the Geology Library, should be used to represent the different types of soils on the soil boring logs.

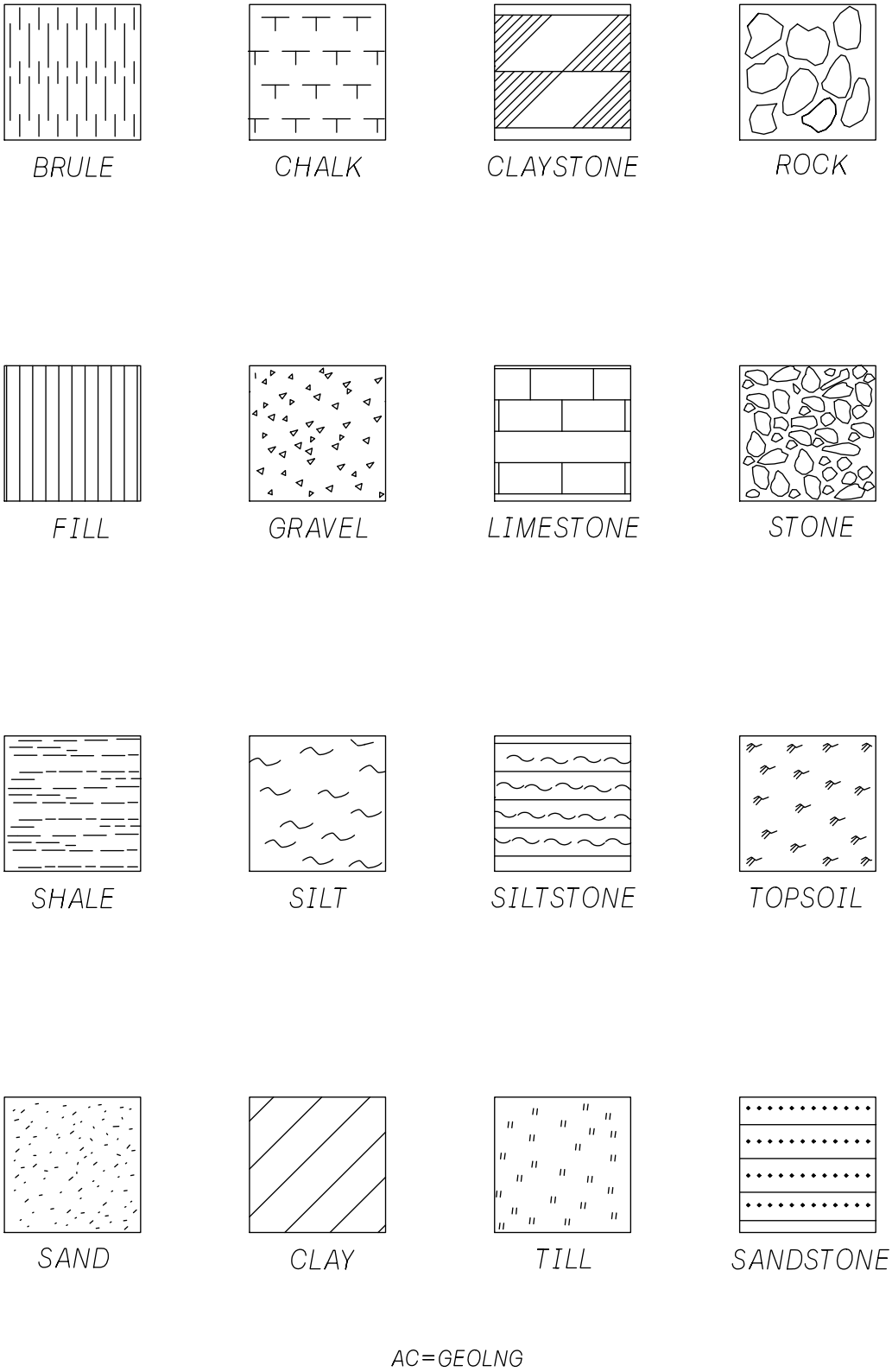

4.1.2 - Bearing Piles Policy

Ground Vibration Pile Driving Procedures

It is possible that ground vibration, due to pile driving, could damage building structures located too close to the pile driving location. Potential damages due to pile driving other than structural ones, must be studied and dealt with based on the nature of the damage. The Bridge Division has adopted the following three procedures to eliminate the possibility of structural damages.

1. Pile driving should not damage any structure located 40 ft. or more from the pile driving location. No special precautions will be taken.
2. When driving pile 20 to 40 ft away from any structure, each pile must be driven inside a predrilled hole. The bottom elevation of the predrilled hole should be at least 2 ft below the elevation of the structure's footings.
3. If any structure is within 20 ft of the pile driving location, special precautions must be taken. Depending on the potential and the nature of the damage, each case must be studied individually.

General Design Criteria

Bridge bearing piles will use the current AASHTO LRFD Bridge Design Specifications to design the pile layouts. The Geotechnical Engineer will determine the type of piling and maximum factored bearing resistance for each structure. The maximum pile spacing is 10 ft. HP12x53 shall be the standard H pile but HP10x42 and HP14x89 can be considered if justified economically and / or structurally.

Bridge Designers shall provide the Geotechnical Engineer with pile loading using LRFD design for each substructure:

1. For Piles: Maximum factored (strength limit state) pile load and the name of the corresponding strength limit state plus Service I limit state values for DC, DW, and LL at the maximum factored pile reaction location.
2. For Drilled Shaft connections: Maximum factored (strength limit state) loads for P, Mux, and Muz, and the name of the corresponding strength limit state plus Service I limit state values for DC, DW, and LL at the maximum factored shaft location.

Soil Parameters

The following design assumptions may be used with engineering judgment when more specific soil design information is not available.

* Allowable lateral pile load:

Concrete Type I	=	5 kips
12 in. HP or pipe, and 14 in. Concrete	=	7 kips
14 in. HP	=	9 kips

Pile Data Tables

The standard Pile Data Tables used by the Bridge Division are shown in the Geology Sheet Policy.

Cut-off Elevations

Pile cut-off elevations must be specified for each pile. Cut-off elevations may be grouped in the Pile Data Table for piling that have a common cut-off elevation. Implied elevations such as, "varies uniformly" must not be used.

Battered Piles

The pile dead load horizontal component is the only contribution from the batter that may be added to the **allowable** lateral pile load. The battered pile slope must be stated in a note on the Geological Sheet and preferably shown on the Abutment or Pier Sheets. Acceptable pile batters are: 1:4, 1:5, 1:6, 1:7, 1:8 (run : rise); see Definition of Bridge Terms for slope.

Pile Numbering

Piles must be numbered (battered piling with a preceding “B”), for each support location in the Pile Data Table and in the pile layout on the Geological Sheet.

Standard Notes

The appropriate standard notes published in Section 2.3.6, see Bearing/Sheet Pile Notes, must be shown on the Geological Sheet.

Piles for Integral Abutments

Since there is no universally accepted pile orientation for steel H piles used in integral abutments, Bridge Division policy is to have the piles oriented such that the web of the pile is parallel to the abutment CL. Pipe piles may also be used for integral abutments.

Integral abutment shall not be used for bridges with a skew angle greater than 45°. Designers should take the length of structures into account before allowing skews over 30°.

All piles designed for integral type abutments shall be predrilled unless waived by the Geotechnical Engineer.

Designers must provide Standard Note # 550 on the Geological sheet. The predrilled hole depth shall be determined by the Geotechnical Engineer.

Wings for integral abutments will be connected with tie rod(s) capable of resisting lateral earth pressure. Designers shall take into consideration wing pile(s) lateral resistance when calculating forces acting on the wing. Standard Note # 341 must be shown on the Front Sheet when integral abutments are used. Wing piles will be embedded 2/3 the wing height into the wing pile encasement. Abutments should be inside the wings.

Steel Pile Splice Details

The CAD cells STPILE or PILEP must be shown on the Geological sheet when steel piling is specified. STPILE shows the standard H pile splice. PILEP shows a pipe pile splice.

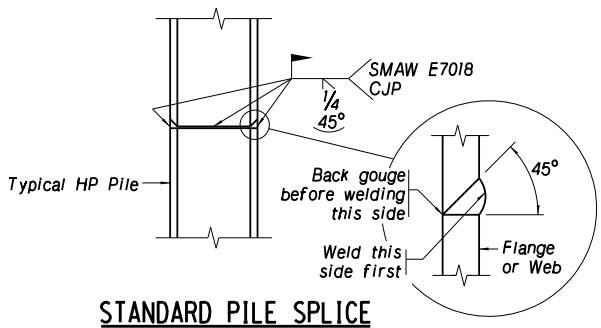

STANDARD PILE SPLICE

AC=STPILE

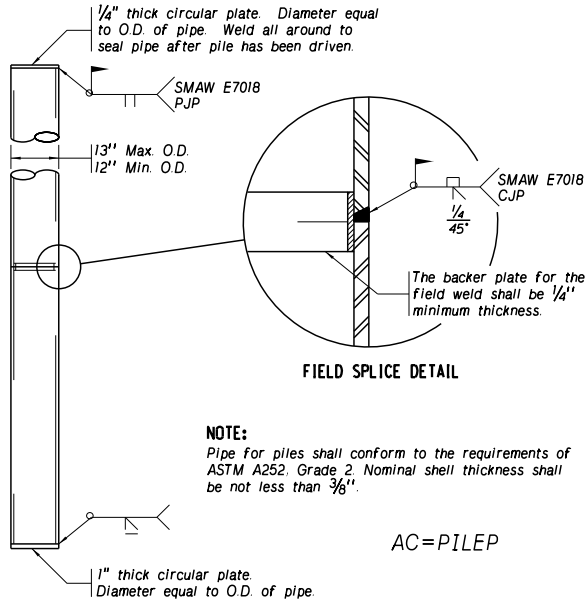

AC=PILEP

PIPE PILE DETAIL

Test Piles

Occasionally test piles will be specified by the Geotechnical Engineer to verify the design tonnage and length of the piling. The Geotechnical Engineer will specify which piles are to be the test piles and the Designer must specify these piles in the Test Pile Data Table, (AC=PILETES). In addition, the Pile Data Table attached to AC=PILETES will be used to specify the tentative pile order lengths to calculate the quantities.

PILE DATA							
LOCATION	PILE NUMBER	CUT-OFF ELEVATION	MINIMUM PENETRATION BELOW CUT-OFF (feet)	TENTATIVE PILE ORDER LENGTH (feet)	PILE ORDER LENGTH (feet)	DESIGN PILE BEARING (kips/pile)	PILE TYPE

AC=PILETES

TEST PILE DATA				
LOCATION	PILE NUMBER	CUT-OFF ELEVATION	PILE ORDER LENGTH (feet)	DESIGN PILE BEARING (kips/pile)

AC=PILETES

Payment

The quantities for bearing piles will be the total length (ft) of pile shown on the Plans. Payment for bearing piles shall be as stated in the Standard Specifications for Highway Construction. See Pay Item Policy in Section 2.3.8 for Standard Pay Items that must be shown on the Front Sheet. Pay Items not published in Section 2 should be verified with the Geological Section before they are used in the Plans.

Prestressed Concrete Piles

Prestressed concrete piles shall be shown in the Plans by including the Concrete Pile Base Sheets, see Section 6 (6.33). This may be treated as a Special Plan 1C and used for several bridges on one project or incorporated into the Bridge Plans as two regular sheets.

Standard Note # 531 shall be shown on the Geology Sheet to specify the type of concrete piles used in the bridge.

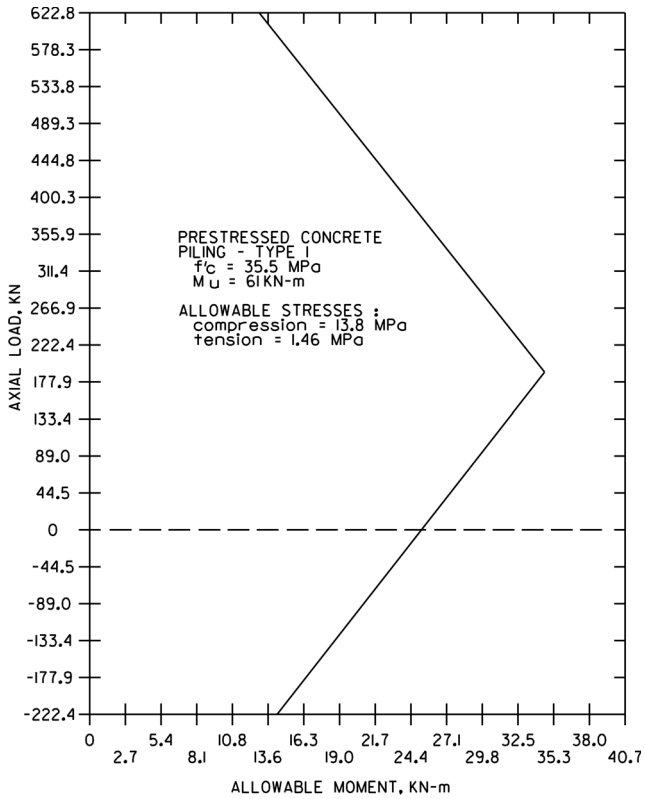

Moment Capacity (Type I)

The graph shown above may be used as a design aid to determine the moment capacity of Type I prestressed piles.

Steel HP plies

HP 12 X 53 piles shall be the standard size used for HP bearing piles.

Steel Pipe Piles

All exposed pipe piles shall be filled with concrete. This concrete shall be Class “47B” with a minimum 28 day compressive strength of 3000 psi. This concrete shall be subsidiary to the Pay Item **“Pipe Piling”** (LF).

Steel Piles

Due to corrosive soils observed in parts of Gage, Johnson, Nemaha, Otoe, Pawnee, and Richardson counties, additional electrochemical testing of soil may be required where steel piling are necessary.

4.1.3 – Tie Rod Policy

Design Criteria

- Tie rods shall be used, if needed, to tie abutment wing walls or the anchor block to the abutment.
- Forces in tie rods shall be computed using any applicable earth pressure distributions and any other horizontal forces acting on the wing wall or the abutment.
- The allowable axial tension in the tie rod shall not exceed 20 ksi.
- A standard upset tie rod detail shall be shown in the Bridge Plans.
- The entire tie rod shall be allowed to be of the upset size as an alternate design.
- Tie rods shall conform to ASTM A709/A709M, Grade 36 steel and Standard Note # 401 must be included with the General Notes on the Front Sheet of the Plans.

The following table of tie rod information should be used to specify tie rods. Designers should be aware of the standard lengths available when specifying the overall length of the tie rod.

Tie Rod Information						**Upset and Turnbuckle Information**	
d (in)	**Gross Area (in^2)**	**Weight (Lb/ft)**	**D (in)**	**H (in)**	**J (in)**	**d (in)**	**Weight of 6" Turnbuckle**
♦ ¾	0.442	1.503	4 ½	8¼	6	1	2.60 Lb
♦ ⅞	0.601	2.046	5 ¼	9⅝	7	1⅛	4.06 Lb
♦ 1	0.785	2.673	6	11	8	1¼	4.00 Lb
♦ 1 ¼	1.227	4.176	10	16⅜	11¼	1¾	9.80 Lb
♦ 1 ½	1.767	6.013	15	22⅞	15	2	14.00 Lb
♦ 1 ¾	2.405	8.185	17½	26¾	17½	2¼	19.60 Lb
♦ 2	3.142	10.690	20	30½	20	2½	23.30 Lb
♦ 2 ¼	3.976	13.530	22½	34⅜	22½	2¾	31.50 Lb
♦ 2 ½	4.909	16.703	25	38¼	25	3	39.50 Lb
■ 2 ¾	5.940	20.211	27½	42	27½	3½	60.50 Lb

♦ Available in 40 ft. length.

■ Available in 20 ft. length

Payment

Tie rods will be paid for under the Pay Item, **"Structural Steel for Substructure"** (LB). There will be no change in payment for alternate designs.

Standard Cell

The following cell, AC=TIEROD, is available for detailing.

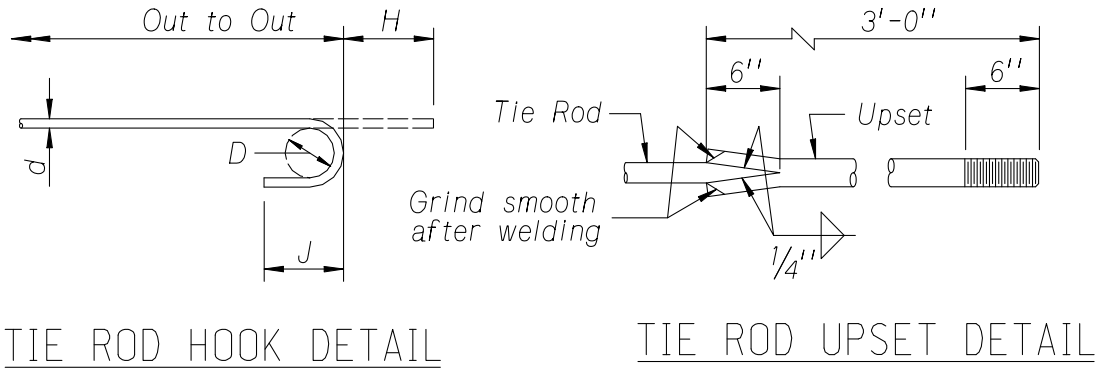

Note: As an alternate, the entire tie rod may be of the size shown for the upset.

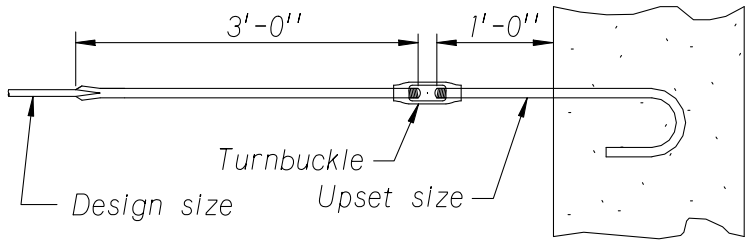

DETAIL FOR TWO TURNBUCKLES

AC=TIEROD

4.1.4 - Excavation of Abutments and Bents

- The intent of this policy is to revise the method excavation quantities are calculated and paid.
- "Excavation for Bridges" at abutments and bents shall be paid for as Lump Sum. Pay Items to be placed on the plans are as follows:

  Abutment No. 1 Excavation..... 1 LS

  Pier No. 1 Excavation (or Bent)..... 1 LS
  Pier No. 2 Excavation (or Bent)..... 1 LS
  Pier No. 3 Excavation (or Bent)..... 1 LS
  Abutment No. 2 Excavation..... 1 LS

- The "Additional Description" in the Project Estimate (BAMS) will include the following two items of information for the Bridge Division records:

  1. Approximate volumes of excavation for each Pay Item.
  2. The Geotechnical Engineer will provide "W" (or "D") to indicate wet (or dry) pier excavations.

- The following is a suggested format:

Abutment	XXX CY D
Pier	XXX CY W

- The estimates do not have to follow the rules provided in the Standard Specifications under "Method of Payment". This is not a quantity nor will it be represented on the plans, so do not spend a lot of time on it.
- A suggested estimate for the abutment volume is to use the volume provided by the granular backfill quantity.
- A suggested estimate for the pier or bent volume is to use simple overall dimensions. A bent for example: (Overall roadway width + 3 feet) x approximate soil height x (concrete width + 3 feet).
- Five (5) cubic yards can be used as a minimum for situations where minimal excavation is expected.

4.1.5 – Spread Footing Design Policy

The following procedures will be used in the design of a spread footing:

1. Obtain maximum allowable soil or bedrock design bearing pressure from the Geology Section.
2. Design footing based on geometrics and allowable pressure. Impact should be omitted.
3. Place the following note on the Geology Sheet:

   'Spread footing design based on xxx psf bearing'.

   Where xxx psf is the maximum bearing capacity as designed, not necessarily the maximum allowable.

4.1.6 – Substructure Concrete Policy

- Bridge components of the substructure shall have a minimum 28-day concrete strength of 3000 psi which is paid for by using the Pay Item **"Class 47B-3000 Concrete for Bridge"** CY).
- Under certain design considerations where economics warrant a higher concrete strength (such as pier columns, pier caps, etc.), Designers may consider the use of 4000 psi concrete which is paid for by using the Pay Item **"Class 47BD-4000 Concrete for Bridge"** (CY).
- Quantities will be based on the volume of concrete shown in the plans.
- The volume of pipe or concrete piles should not be included in the volume of concrete for the substructure.

4.1.7 – Scour At Bridge Sites

General

The effects of scour at bridge sites shall be investigated for the following two conditions:

- Design Flood. This shall be the more severe of the 100-year flood event or from an overtopping flood of lesser recurrence interval.
- Check Flood. This shall be the more severe of the 500-year flood event or from an overtopping flood of lesser recurrence interval.

The effects of scour and the bridge design for the anticipated scour involves hydraulic, geotechnical and structural concerns. Therefore, the Bridge Designer will need to work closely with the Hydrology and Hydraulics Section and the Geotechnical Section in Materials and Research throughout the design process.

The Bridge Designer shall assess the substructure requirements for scour as early as possible in the final bridge design process and shall notify the Assistant Bridge Engineer or any foreseen problems.

Definitions

General Scour: Bridge scour that is not local scour. In a channel, general scour usually affects all or most of the channel width; i.e., general scour involves the removal of material from the bed across all or most of the width of a channel as a result of a natural flow contraction which causes increased velocities and bed shear stress.

Local Scour: Removal of material from the channel bed or banks that is at a specific location. Bridge scour that is localized at a pier, abutment, or other obstruction to flow.

Berm: The horizontal portion of the graded channel profile immediately adjacent to the abutment.

Critical Berm Elevation: The elevation that the soil in front of the abutment is assumed to scour to for the 100-year flood event.

DESIGN GUIDELINES FOR SCOUR

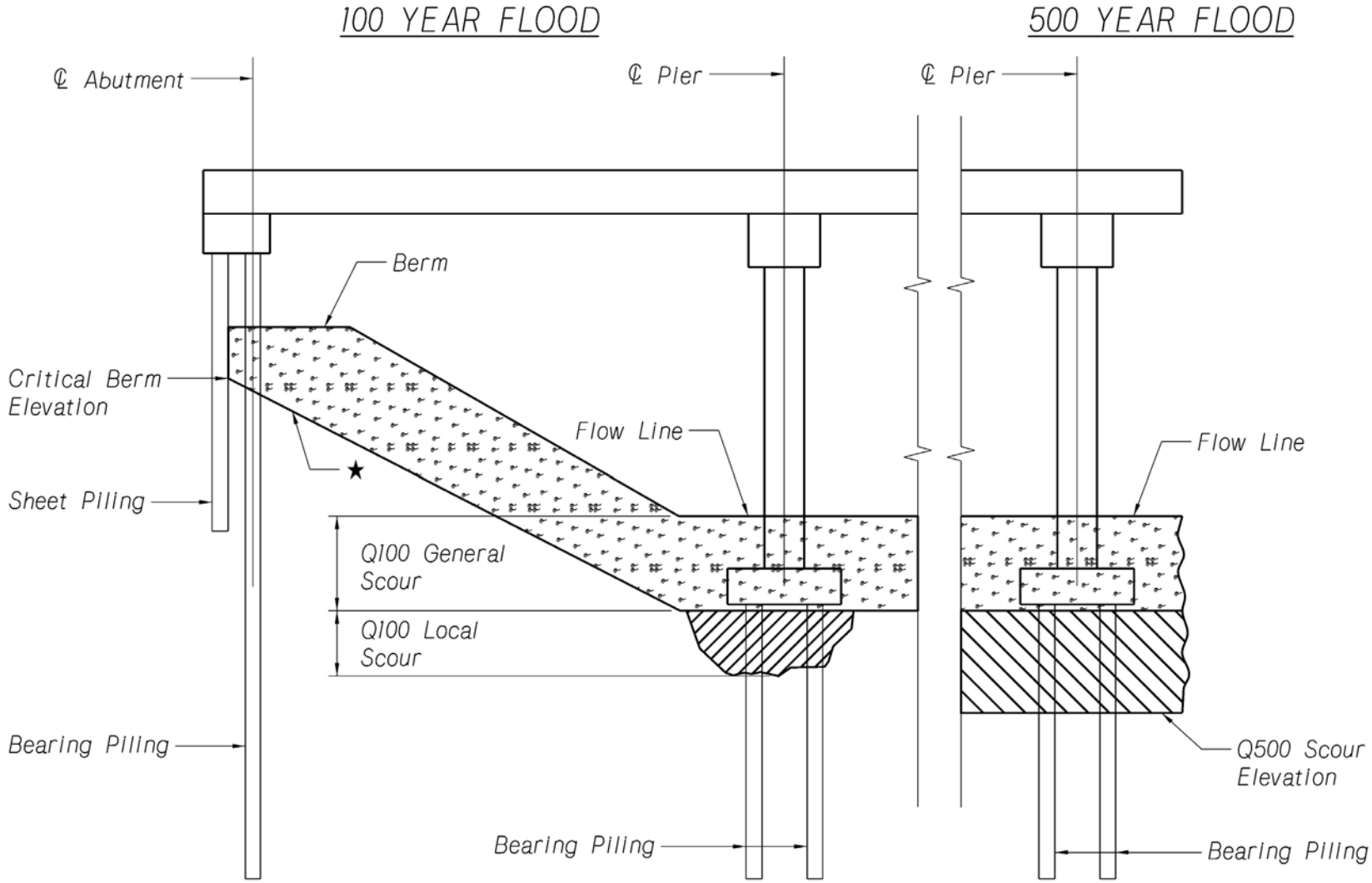

★ Assumed channel slope near abutments for scoured conditions: 1½ : 1 for cohesive soils
2 : 1 for sandy soils

100-Year Flood Design Guidelines

Bridge Loadings

The bridge should be fully functional while in a scoured condition for the appropriate AASHTO LRFD Group Load combinations when subjected to a 100-year flood or an overtopping flood of lesser recurrence. The Bridge Designers shall consult with the Hydrology and Hydraulics Section regarding the applicability of ice loads in the above loading combinations.

Piers/Bents

The Q100 General Scour and the Q100 Local Scour shall be added together for the total scour anticipated at the piers and bents. Buckling of the bearing piles shall be investigated based on the unsupported length of the piles resulting from the scour.

Abutments

Sheet Piles

The steel sheet piling shall be designed in accordance with the Steel Sheet Piling Policy in Section 4.4.1.

Bearing Piles

Buckling of bearing piles shall be investigated based on the unsupported length of the piles resulting from the scour.

Bearing Piles

Pile loads and the depth of scour for the 100-year flood shall be provided to the Geotechnical Section in the Materials and Research Division. This information shall be provided for all abutments, piers and bents.

500-Year Flood Design Guidelines

Bridge Loadings

When checking the effects of a 500-year flood, the bridge should survive the loading combinations as noted:

> AASHTO Standard Specifications for Highway Bridges
>
> Use Group VIII and IX load combinations when investigating this extreme event situation.
>
> AASHTO LRFD Bridge Design Specifications
>
> Use Extreme Event-II Limit State when investigating this extreme event situation.

The stability of the bridge foundation for this design case shall be maintained. Excess reserve beyond that required for stability under this condition is not necessary.

The Bridge Designers shall consult with the Hydrology and Hydraulics Section regarding the applicability of ice loads in the above loading combination.

Piers/Bents

Piers and bents shall be designed for the Q500 Scour Elevation provided by the Hydraulics Section.

Abutments

Sheet Piles

The Bridge Designer shall provide sheet pile lengths that at least meet the minimum sheet pile tip elevation specified by the Hydrology and Hydraulics Section.

Bearing Piles

Pile loads and the depth of scour for the 500-year flood shall be provided to the Geotechnical Section in the Materials and Research Division. This information shall be provided for the piers and bents.

SECTION 4.2: ABUTMENTS

4.2.1 – Abutment Policy

General

It is the Bridge Division policy to use steel sheet piles with bearing piles in abutment cap for water crossing bridges.

Steel sheet piles need not be used in the following:

- Integral abutments.
- Abutments for bridges over railroads or highways.

Integral Abutments

Integral abutments are designed to allow horizontal movements and are rigidly attached to the superstructure. The Bridge Division Policy is to support integral abutments on steel H or pipe piles. All piles for integral abutments, excluding wing piles, shall be placed in predrilled holes to elevation determined by the Geotechnical Engineer. Pile orientation and backfilling shall conform to Piles for Integral Abutments Policy (see 4.1.2).

Anchor Blocks

If the abutment design requires an anchor block, it should be designed for a 1.5 minimum Factor of Safety against overturning, and placed beyond the grade beam and below the paving section. Tie rods connecting the anchor block to the abutment should be placed below the grade beam.

Sheet Pile Abutment Cap Geometry

In order to accommodate various sheet pile depths without changing the geometry and reinforcing steel of the abutment cap, Designers must provide a cap reinforcing detail similar to the one shown below.

Abutment plans shall include a field note to provide holes in sheet piling for the stirrup bars.

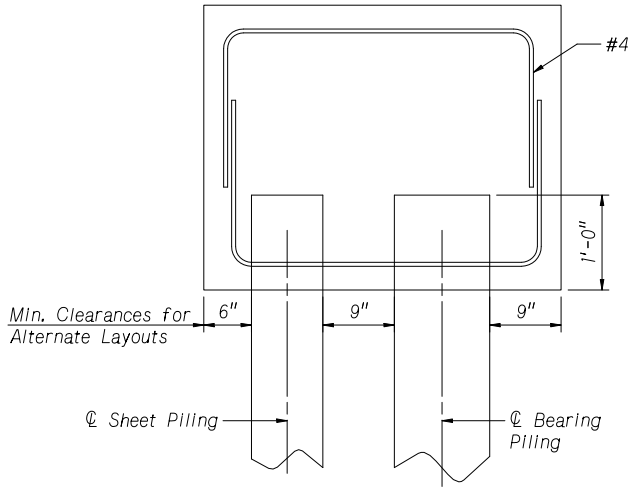

ABUTMENT CAP DETAIL

Widening

New concrete and piling should be laid out and dimensioned from the CL roadway and not from any existing concrete or piling, due to the fact that these items were seldom built precisely according to the As-Built Plan.

4.2.2 – Abutment Drainage Policy

General Design

All bridge designs, except those with MSE walls, shall allow for drainage behind abutments with either a drainage system or weep holes.

Subsurface Drainage Matting

Drainage matting should be shown as constant depth piece of matting. It will wrap around a sloping drain pipe at the bottom and extend 3 ft. along the wing at the ends. Pipe layouts and drainage matting should preferably be shown in the elevation view on the abutment sheets. Standard Note # 602 shall be included on the Drainage Detail Sheet.

On existing bridges, drainage matting should be provided when abutments are to be remodeled to add turndowns. In such cases, drainage pipe may need to be 'daylighted' through the wings.

Weep Holes

Weep holes should be one inch minimum diameter and provided at approximately 10 ft intervals along the abutment or between piling would be sufficient. Weep holes should be extended to daylight or into the rock riprap and be covered with a galvanized wire mesh screen.

Payment

The Pay Item, **"Subsurface Drainage Matting"** (SY) shall be measured by the square yard and includes payment for furnishing and placing of PVC pipe, wire mesh and all miscellaneous items required for placement of the drainage matting.

CAD Cells

The CAD cells shown here are available for detailers.

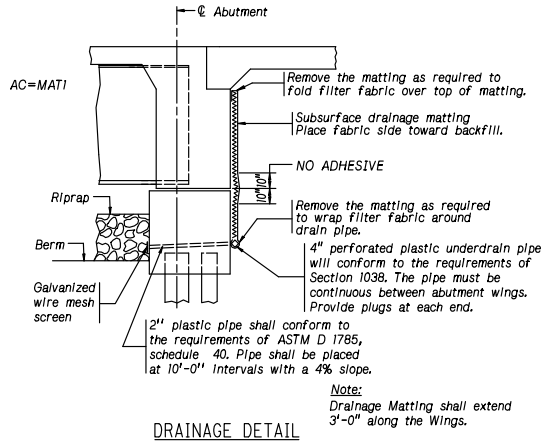

DRAINAGE DETAIL

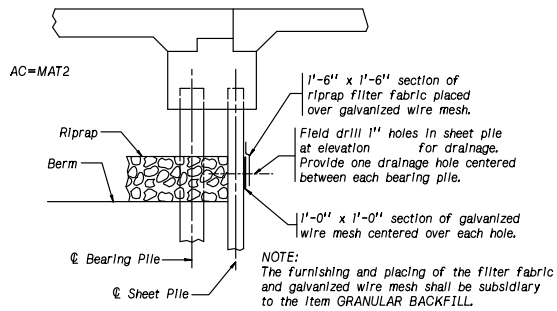

DRAINAGE DETAIL

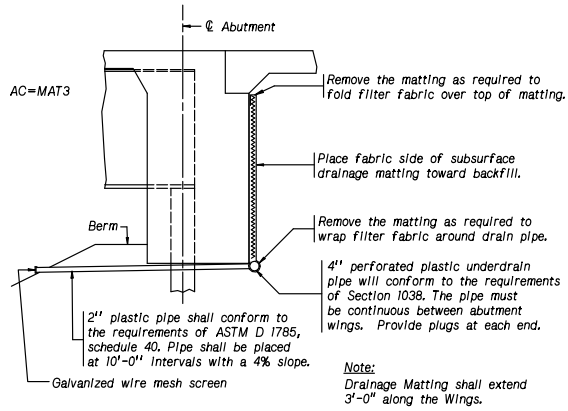

DRAINAGE DETAIL

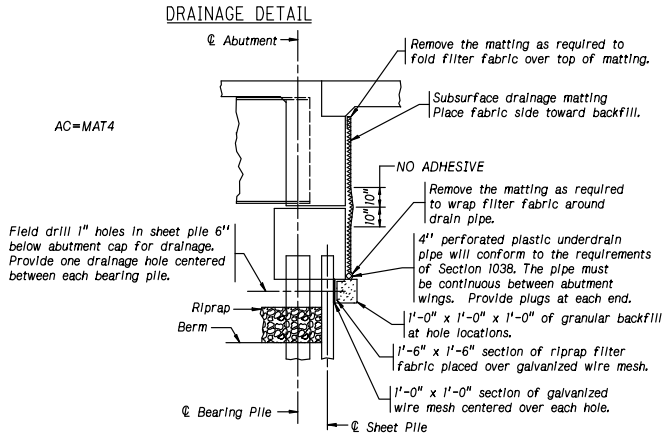

DRAINAGE DETAIL

Note:
Extend drainage matting 3'-0" along the wings.

4.2.3 – Granular Backfill Policy

The interior of abutments and wing walls, tie rod trenches, and the area beneath approach slab sections, as excavated by the Contractor, shall be backfilled with granular backfill. See Section 702 Excavation of Structures in the NDOR Standard Specifications.

Payment

The Pay Item on the Front Sheet will be **"Granular Backfill"** (CY). The Bridge Division has determined that the Granular Backfill quantity shall be measured using a simplified cross-sectional area shown below, and calculated using the equation: Quantity (CY) = Area [L_1 + 2 (L_2)] / 27 + (Area 2 x Roadway Width) / 27. The plans must include a Granular Backfill Detail consisting of a Plan View, an appropriate Section (1 or 2), see Section A-A below:

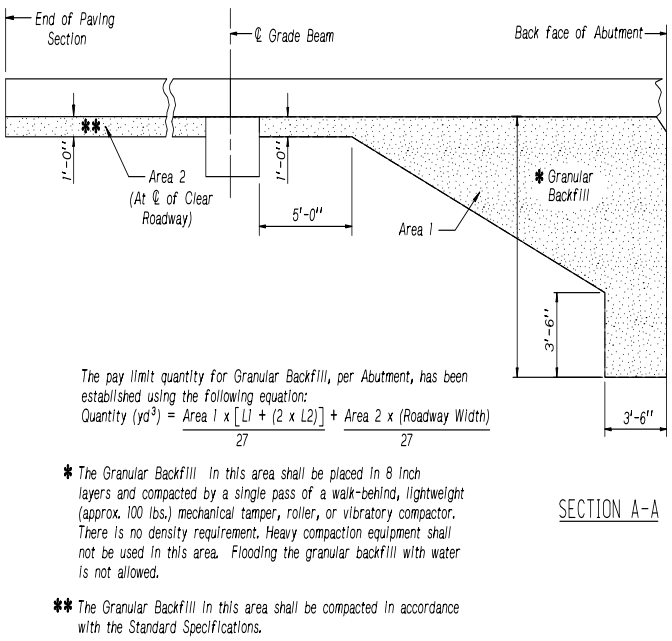

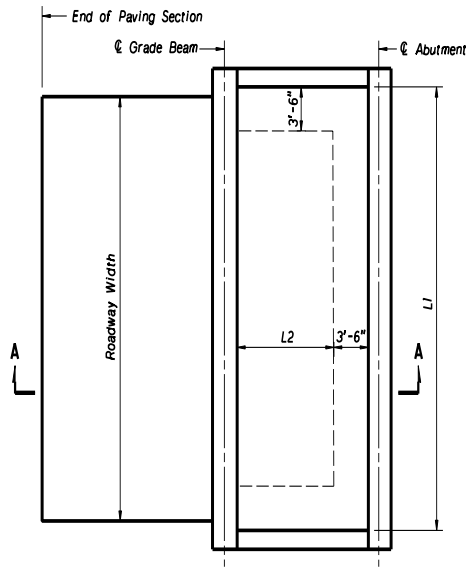

PLAN OF GRANULAR BACKFILL

Quantity Definitions

L_1 = The horizontal distance between CL of sheet pile or inside face of concrete depending upon the depth of the granular backfill. Measured along the CL of abutment in Ft.

L_2 = The horizontal distance perpendicular to CL of abutment from the back face of abutment to the front face of grade beam in Ft., minus 3 ft. - 6 in.

A = The vertical distance from the bottom of the approach slab to the bottom of the abutment or drainage matting (whichever is lower), at CL of roadway.

AREA = The cross-sectional area of granular backfill, normal to CL roadway.

Detailing

Plan details must provide all dimensions necessary to calculate the established volume for the quantity. The volume detailed must be clearly shown, but will not accurately describe the quantity required.

The following cells are recommended to indicate a Plan View and Section for a shallow abutment or a deep abutment:

Shallow Abutment **Deep Abutment**

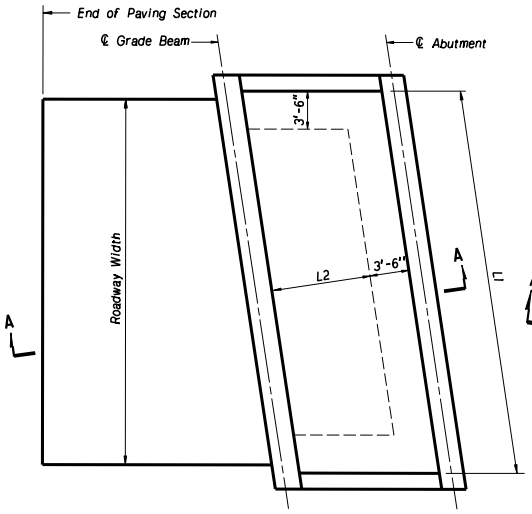

PLAN OF GRANULAR BACKFILL

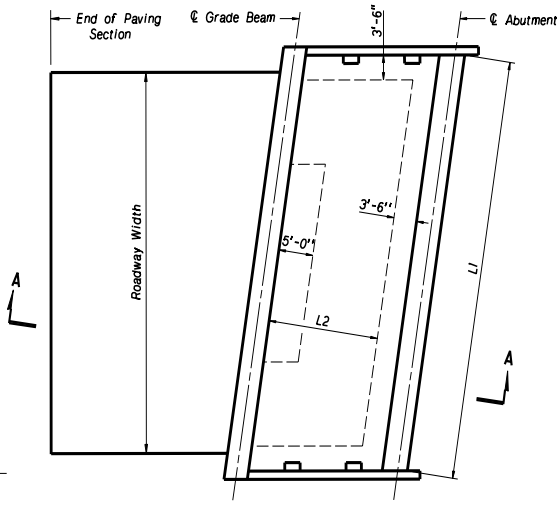

PLAN OF GRANULAR BACKFILL

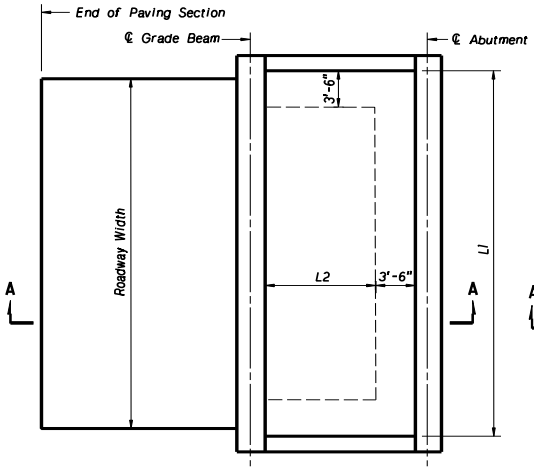

PLAN OF GRANULAR BACKFILL

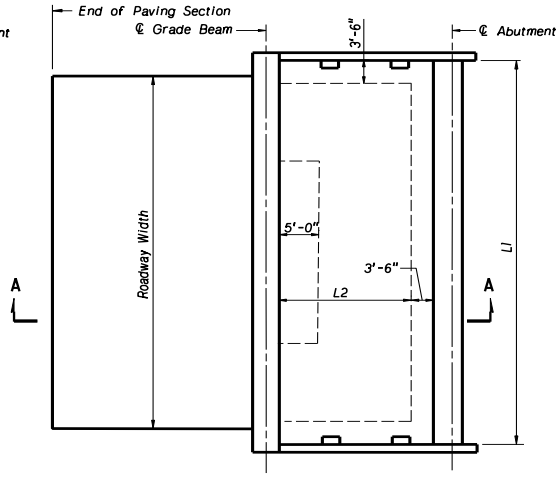

PLAN OF GRANULAR BACKFILL

Shallow Abutment

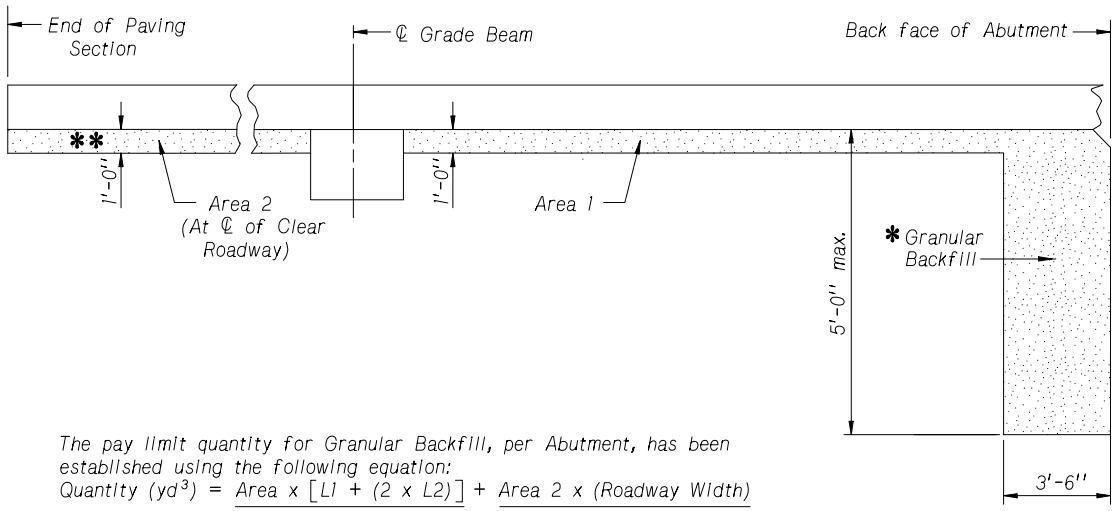

The pay limit quantity for Granular Backfill, per Abutment, has been established using the following equation:

$$\text{Quantity } (yd^3) = \frac{\text{Area} \times [L1 + (2 \times L2)]}{27} + \frac{\text{Area 2} \times (\text{Roadway Width})}{27}$$

SECTION A-A

* The Granular Backfill in this area shall be placed in 8 inch layers and compacted by a single pass of a walk-behind, lightweight (approx. 100 lbs.) mechanical tamper, roller, or vibratory compactor. There is no density requirement. Heavy compaction equipment shall not be used in this area. Flooding the granular backfill with water is not allowed.

** The Granular Backfill in this area shall be compacted in accordance with the Standard Specifications.

Deep Abutment

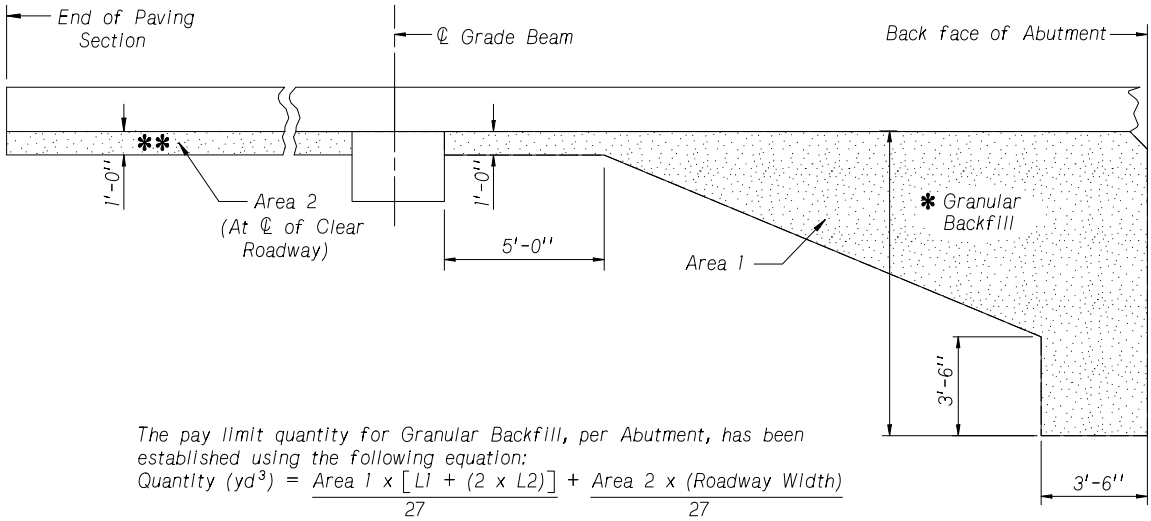

The pay limit quantity for Granular Backfill, per Abutment, has been established using the following equation:

$$\text{Quantity } (yd^3) = \frac{\text{Area 1} \times [L1 + (2 \times L2)]}{27} + \frac{\text{Area 2} \times (\text{Roadway Width})}{27}$$

SECTION A-A

* The Granular Backfill in this area shall be placed in 8 inch layers and compacted by a single pass of a walk-behind, lightweight (approx. 100 lbs.) mechanical tamper, roller, or vibratory compactor. There is no density requirement. Heavy compaction equipment shall not be used in this area. Flooding the granular backfill with water is not allowed.

** The Granular Backfill in this area shall be compacted in accordance with the Standard Specifications.

4.2.4 – Expanded Polystyrene (EPS) Geofoam

General Design

When conditions require, Expanded Polystyrene (EPS) Geofoam may be used behind abutments. The Pay Item "**Expanded Polystyrene Geofoam"** (CY) shall be an established quantity. The attached details are considered a minimum and the Designer should contact the Materials and Research Geotechnical Section for project specific details and specifications.

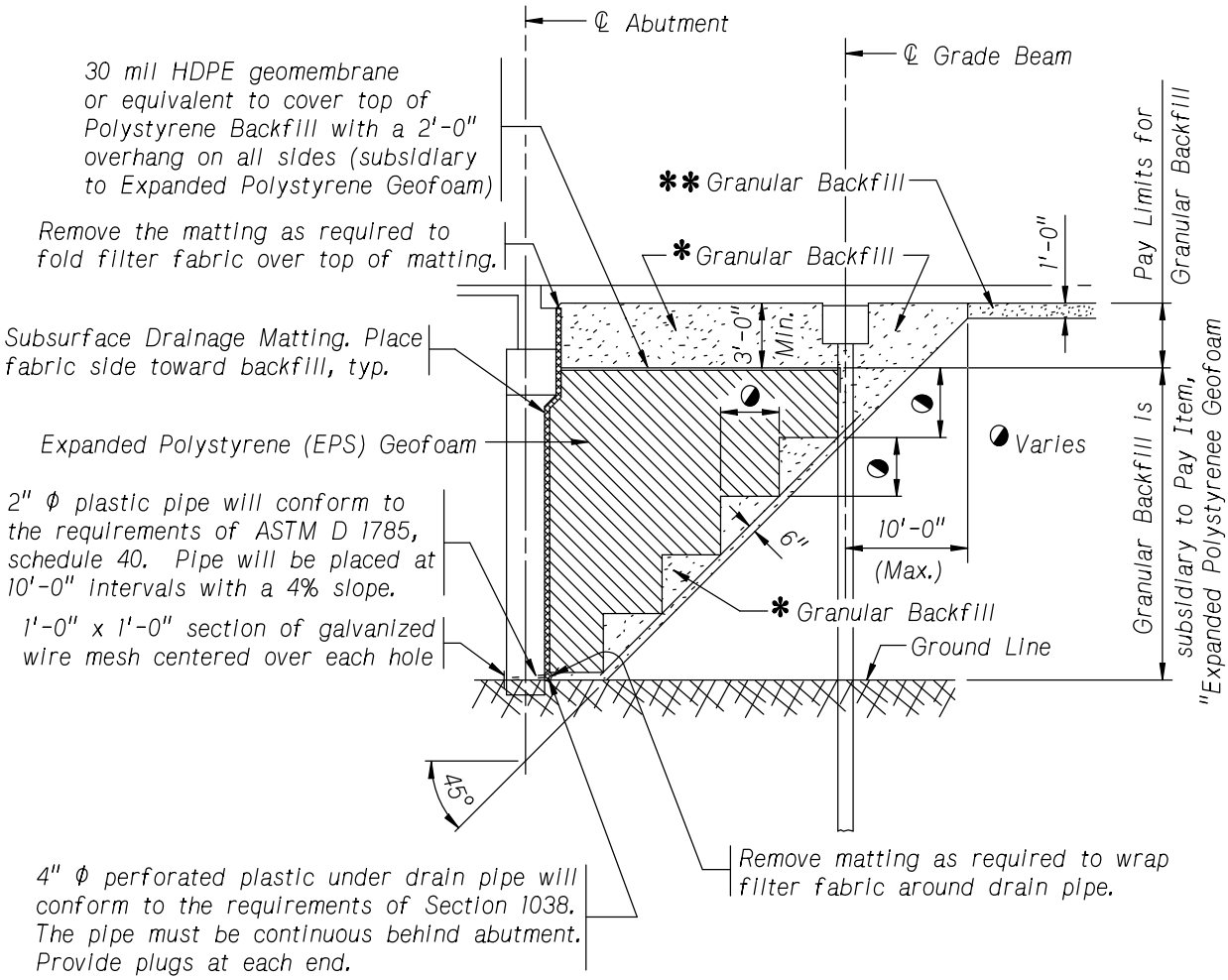

* The Granular Backfill in this area shall be placed in 8 inch layers and compacted by a single pass of a walk-behind, lightweight (approx. 100 lbs.) mechanical tamper, roller or vibratory compactor. There is no density requirement. Heavy compaction equipment shall not be used in this area. Flooding the granular backfill with water is not allowed.

** The Granular Backfill in this area shall be compacted in accordance with the Standard Specifications.

EXPANDED POLYSTYRENE GEOFOAM
AC=EPS

4.2.5 – Grade Beam Policy

General Design

Grade beams will be required on projects that specify new approach slabs. Station and elevation at grade for the grade beam CL should be shown on the General Plan and Elevation Sheet. Any roadway grade transitions during construction should be made in the paving section.

Grade Beam Layout

CL grade beams shall be parallel to the abutment and located 20 ft. beyond the end of the bridge floor. Grade beams shall extend to the outside edges of the approach section; an exception would be sidewalk layouts. If wings extend beyond the grade beam, changing paving section layouts is not recommended; see the Wing Policy for more information.

Plans should indicate a grade beam design of constant section and approach slab haunch. As an alternate, the Designer may provide a variable haunch in the approach slab.

Grade Beam Piles

Piling will be used to support all grade beams. Grade beam pile layouts shall be included on the Geology Sheet with the abutment piling.

For abutments utilizing Mechanically Stabilized Earth (MSE) walls, Designers should lay out grade beam piles directly behind abutment piles. This means if you drew a line perpendicular to the CL abutment passing through the abutment piles, the grade beam piles would also fall on this line.

Reinforcement Layout

4 closed stirrup bars should be used. # 7 bars were adopted for use as beam reinforcement using conservative estimates for live load impact and pavement section reactions. The grade beam details shown in the cell (AC=GBEAM), allow for a pile spacing of 10 ft. measured along the CL grade beam.

Payment

Concrete and steel in the grade beam shall be included in the abutment Pay Items **"Class 47B-3000 Concrete for Bridge"** (CY) and **"Epoxy Coated Reinforcing Steel"** (LB). Grade beam piling shall be considered abutment piling for the purpose of payment.

Grade Beam Detailing

Grade beam detail information should be located with the abutment information. The cell shown (AC=GBEAM), is available for use with the abutment details.

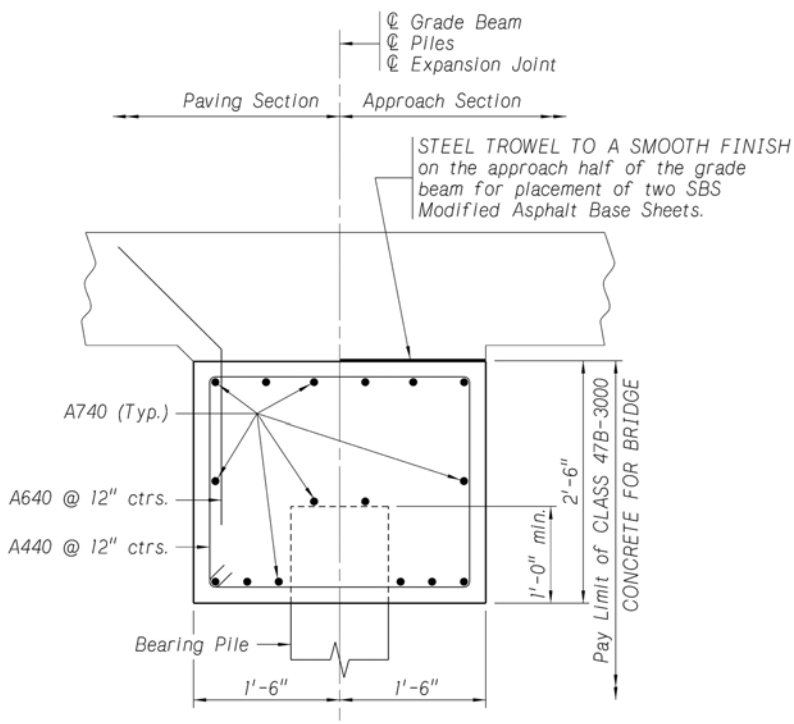

GRADE BEAM SECTION
Not to Scale
AC=GBEAM

4.2.6 – Wing Policy

Design Criteria

- Wing walls shall be supported by piles, sheet piles (on stream crossings) and, if necessary, tie rods.
- Minimum wing wall thickness shall be 14 in. to accommodate chutes and pump hoses when pouring concrete.
- Wing walls shall be designed to resist soil pressure. Wing walls shall be designed such that they do not deflect laterally beyond the allowed ½ in. tolerance under backfill pressure in extreme scour conditions.
- Wing walls shall be designed taking into account tie rod(s) forces and piles lateral resistance.

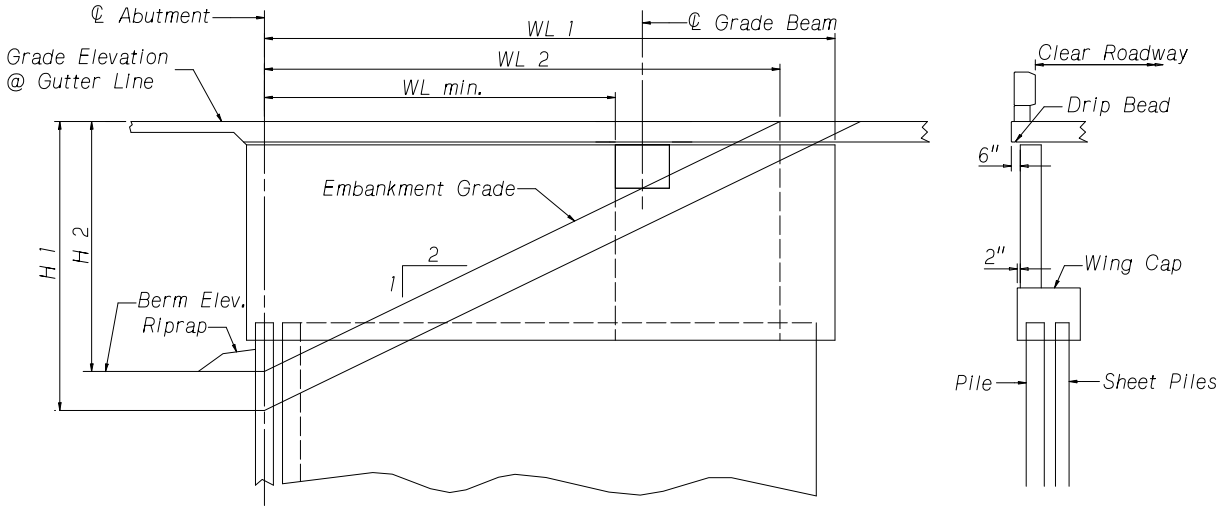

WING LAYOUT SKETCH

- Wing Layout

  In general, U-shaped wing length (WL_{min}, $WL_{(1,2)}$) shall be determined by the following:

  WL_{min} = Wing length from abutment CL to the front face of the grade beam.

  In this case, there may be a gap between the wing wall and the grade beam. The gap shall be 1 in. and should be indicated on the plans as “1” preformed joint filler”.

  $WL_{(1,2)} = (H_{(1,2)}$ /slope / Cos. (skew) $\pm$ (1 ft.).

  H1 = Height definition to be used when the berm is not protected and the bridge is located over a waterway.

  H2 = Height definition to be used when the berm is protected by riprap or concrete slope protection, or the bridge is not located over waterway.

  Slope = The ratio (rise / run) of the embankment perpendicular to the skew.

- The exterior face of the wings shall be 6 in. inward from the outside edge of the approach section, see Wing Layout sketch. Designers should be sure that wing location does not interfere with placement of the girders at the abutment.

- Wing walls shall be placed below the approach slab, with a 2 1/8 in. gap between the bottom of the approach and the top of the wing to allow for live load deflection. The gap should be indicated on the plans as a 1/8 in. hard board on top of 2 in. extruded polystyrene.
- When wing walls extend beyond the grade beam, the joint between the wing wall and the grade beam should be indicated on the plans as cold joint.
- When wing length extends beyond CL of grade beam, designers shall check both approach and pavement slab overhang for appropriate reinforcement due to guardrail attachment on unsupported slab edges.
- When wing length is greater than 7 ft. (length of rail over pavement section) beyond the CL of grade beam, the approach section should be lengthened and redesigned with Section Leader approval.

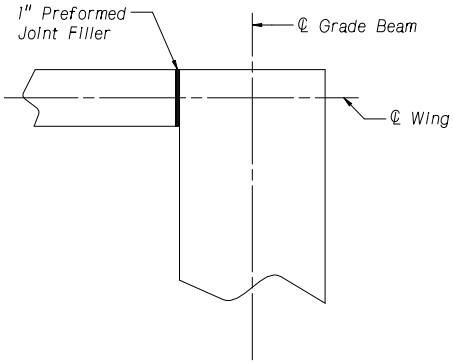

Wing ends at face of the Grade Beam

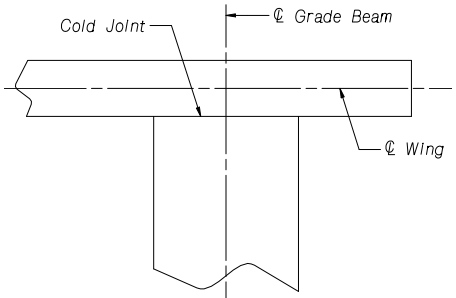

Wing extended beyond Grade Beam

Protection of Wings

All bridges shall have filter fabric and rock or broken concrete riprap placed along the wing where the wing is not protected by concrete slope protection. The riprap shall extend from the berm elevation to the face of end rail buttress (see sketch below). Riprap width shall be a minimum of 3 feet from the outside of the wing wall at a depth of 1 ft. - 6 in. The CAD cell (AC=WNGRIP), shown at right, is available for designers.

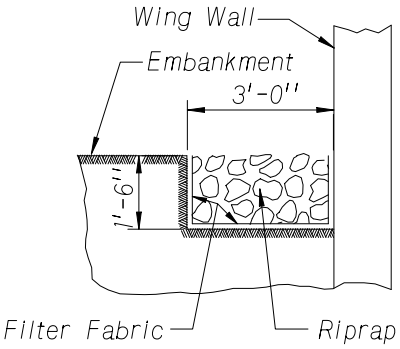

NOTE: The average size of riprap shall be .25 cu. ft., or 35 lbs.

WING RIPRAP DETAIL
AC=WNGRIP

Bridge Base Sheets

Not available for abutment wings.

Quantities

Payment for concrete and reinforcement used in the wings shall be included with the Pay Items for the abutment.

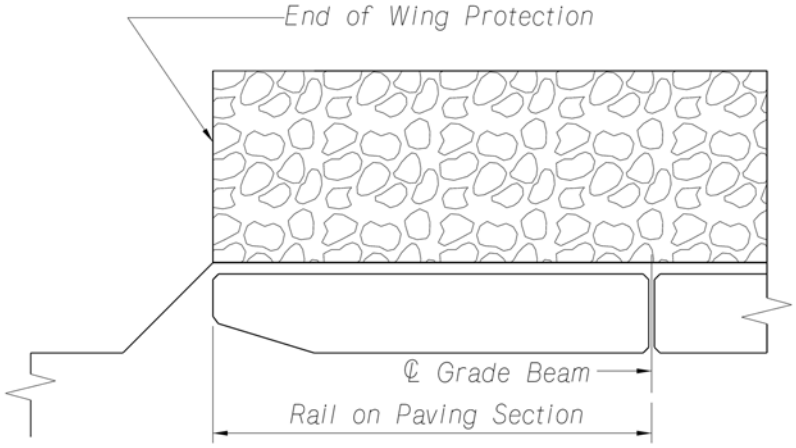

Wing Protection

SECTION 4.3: PIERS/BENTS

4.3.1 – Pier and Bent Policy

General

- Open pile bents, encased pile bents, hammerhead piers, multi-column piers and wall piers are pier types that are being used by the Bridge Division.
- On stream crossings, pier/bent type and elevations shall be jointly decided on by the Hydraulic and Design Sections of the Bridge Division.
- Ice loads shall be a minimum of 1.5 feet thick with a crushing force of 24 ksf applied at the Q100 elevation at bridge locations identified by the Hydraulic Section.
- The upstream and downstream sides of a solid wall pier or encased pile bent shall be battered at 1:8, and the upstream side shall be protected with Nose Armor Angle.
- The minimum width of a solid wall pier or encased pile bent shall be 2 ft.
- For grade separation, standard pier details shown on the following pages can be used.
- The minimum width of any pier cap for grade separation structures shall be 3 ft.
- For aesthetic reason, it is recommended that the pier cap be a minimum of 6 in. wider than the column (3 in. overhang on each side of the column).
- Designers should consider thermal force effects when the length of the substructure cap exceeds 50 feet or place gaps in the cap between columns.
- Pile elevations may be staggered in encased pile bents. It is recommended that the lower cut off be approximately 1/3 of the bent wall (a minimum of 3 times the pile dimension). The upper cut off should be within a few feet of the cap and in 5 foot increments from the lower.

Concrete

- Concrete for piers and bents shall conform to the BOPP manual Substructure Concrete Policy (see Section 4.1.6).

Reinforcement

- All reinforcement bars used in piers and bents shall be epoxy coated.

Pier Columns

- The minimum recommended size of a square column is 2 ft.
- For rectangular columns wider than 4 ft., designers shall use cross ties or overlapped ties to meet AASHTO LRFD 5.10.6.3 requirements.
- Conforming to industry standards for circular column forms, column diameters must be specified in 6 in. increments. The Bridge Division has assumed a 2 ft. - 6 in. minimum column size.

Pier Footings

- The minimum thickness of any footing supported on piles shall be 3 feet.
- For highway crossings, a minimum vertical distance of 3 feet shall be provided between ground elevation and the top of any pier footing.

.

- For railroad crossings, the minimum footing embedment shall conform to railroad requirements (see Section 1.2.1).
- For water crossings, the Hydraulic Section shall determine pier footings elevations to provide adequate scour protection.

Nose Armor Angle Policy

- Nose armor angles shall be provided at stream crossings for all concrete piers and bents.
- Nose armor angles will be placed on the upstream side only.
- If galvanized nose angles are required, Standard Note # 402 shall be provided on the Front Sheet.
- Designers should use the cell, NOSEAA shown below.

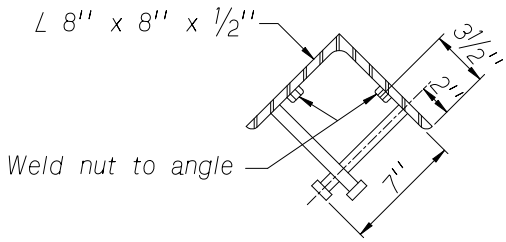

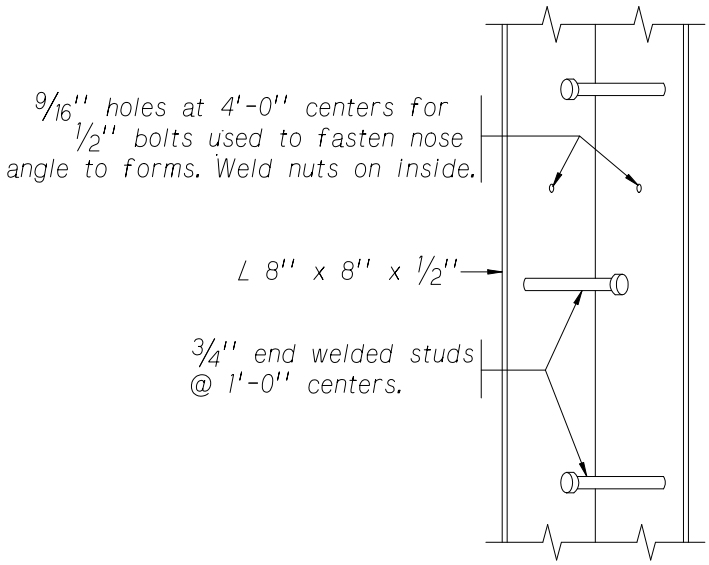

NOSE ARMOR ANGLE DETAILS

AC=NOSEAA

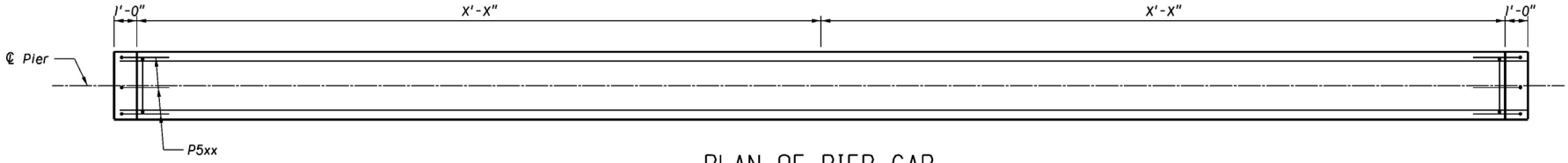

PLAN OF PIER CAP

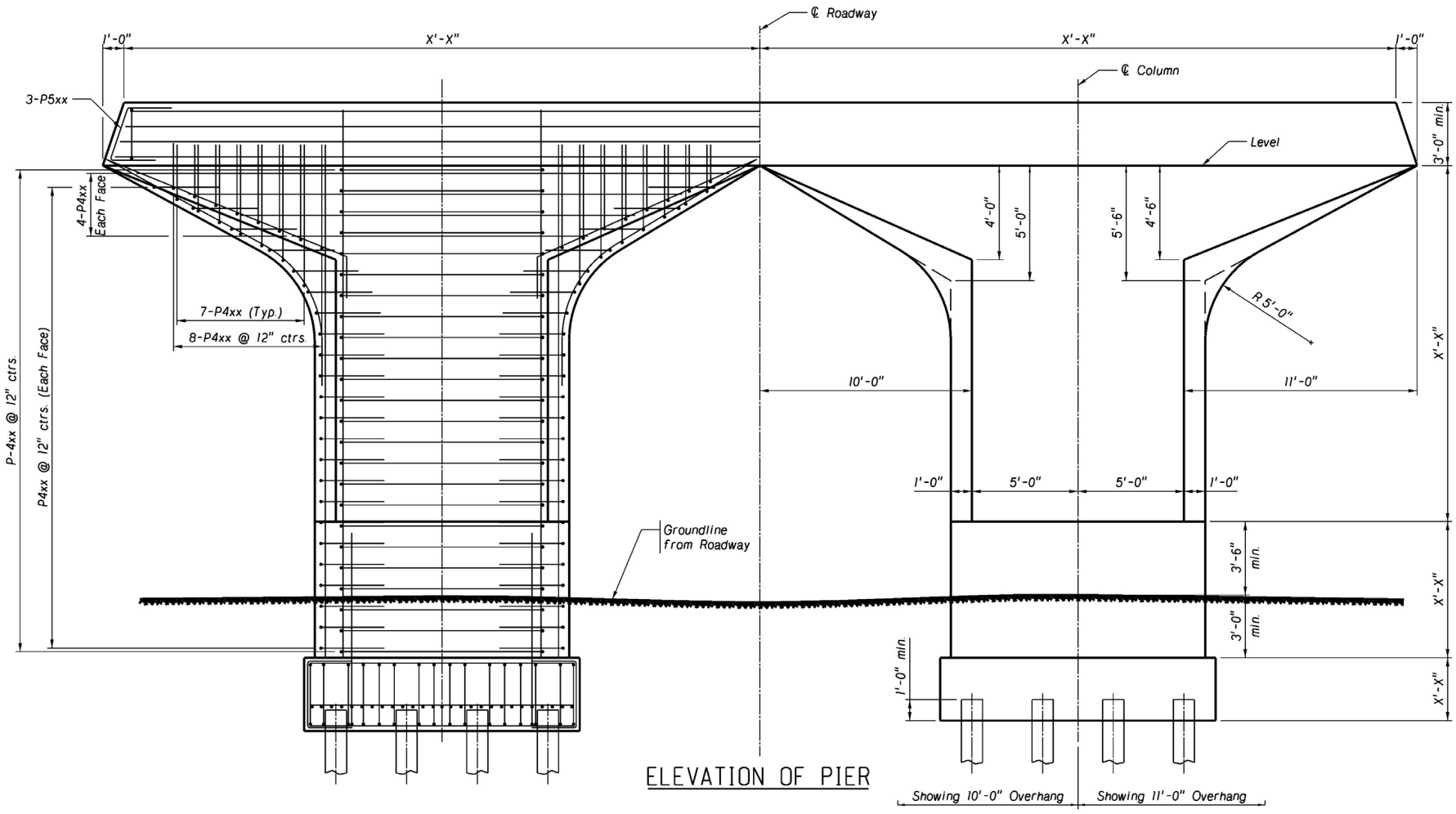

ELEVATION OF PIER

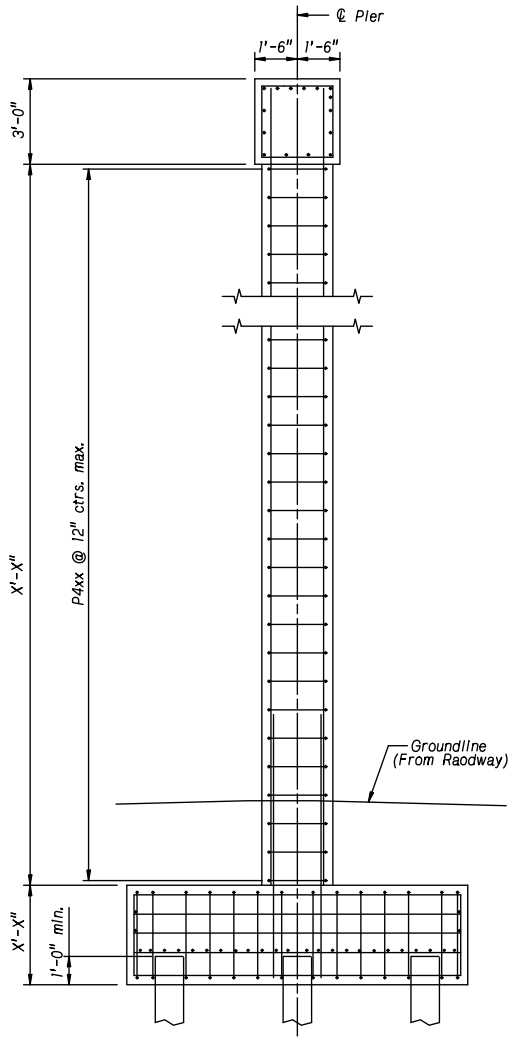

SECTION B-B

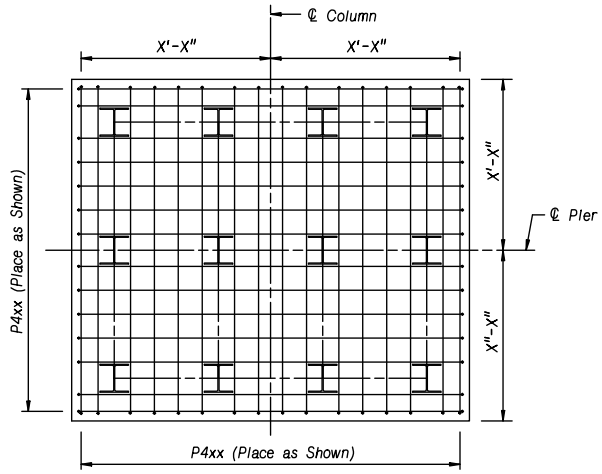

PLAN OF PIER FOOTING

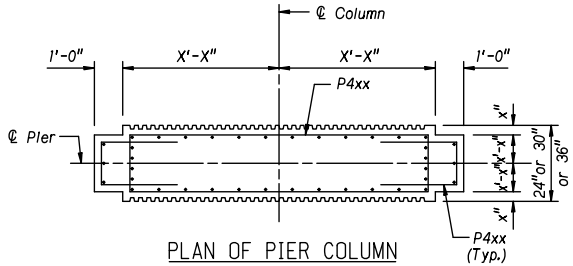

PLAN OF PIER COLUMN

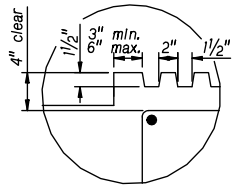

DETAIL "A"

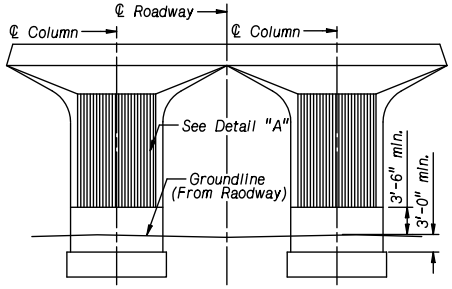

TEXURING LIMITS OF PIER (EACH FACE)

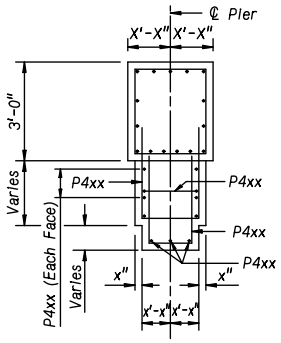

SECTION A-A

SECTION 4.4: SHEET PILING

4.4.1 – Steel Sheet Piling Policy

General Design Criteria

The following guidelines should be used when sheet piles are to retain fill behind abutments.

- **Design Length**

  The design length of the abutment sheet piles will be based on the critical berm elevation given in the Bridge Design Data Sheet, see Page 1.02 for Data Sheet Preparation Policy.

- **Lateral Earth Loads**

  Sheet piles should be designed for lateral earth loads and not designed to resist any vertical loading. Sheet Piles will be designed to maintain overall stability per Section 11.6.2.3 "Overall Stability" of the AASHTO LRFD Bridge Design Specifications. Accordingly, a safety factor of 1.5 is suggested for embedment. This does not preclude justifiable exceptions based on sound engineering principles.

- **Fixed Abutments**

  On slab bridges and bridges where abutments are tied back to an anchor block, the connection at the abutment cap may be considered to be rotation free and translation fixed. On all other bridges, sheet piling should first be designed as a cantilever (i.e., rotation fixed and translation free at the top and fixed at the bottom). If the resulting sheet pile section is not practical (depth > 13 in.), then anchor the abutment cap to an anchor block with tie rods.

- **Granular Soil**

Y_{sat}	=		Water table omitted from design
∅	=	25°	(Friction angle)
y	=	125 pcf	(Unit weight)
K_a	=	0.4	(Coefficient of Active Earth Pressure)
K_p	=	2.5	(Coefficient of Passive Earth Pressure)

The equivalent fluid density for these soil conditions shall be Y_{eq} = 50 Lb./Cu. Ft. and the basic earth pressure P (psf) can be calculated as:

$P = Y_{eq} Z$, where: Z = Design wall height (FT)

Sheet Pile Detailing

General steel sheet pile design criteria shall be provided in the plans using Standard Note # 521. This information will be used by the Contractor to provide the pile section and layout shown in the Shop Plans. The following items must be provided in the Plans:

- General layout of sheet piles
- Minimum section length and elastic section modulus/ft of the sheet pile that will be determined by design.
- Designers will specify a maximum section depth of 13 in. for designs that require up to 19.3 in^3 section modulus per foot of wall. Designers shall specify a maximum 16 in. section depth for designs that require up to 32.0 in^3 section modulus per foot of wall.

Sheet Pile Detailing (continued)

- Minimum thickness of 5/16 in.
- Minimum embedment of 9 in. into concrete.
- **Corners**

  Steel sheet pile shall be tight fit with a 3 in. minimum lap at the corners. The corner detail cell AC=SPCORN must be shown on the corner on the Geology Sheet. Bent or locked sheet pile should not be used for corner sheet piles. Bolted corners are not cost effective and will not be permitted at any time.

  If for some unusual reason bent corners are needed, the piling should be bent in lengths less than 10 ft. to allow for local fabrication. This may require more than one pile at the corner to reach the required elevation. Designers shall indicate the bent option criteria on the plans and refer to one of the current industry handbooks for detailing.

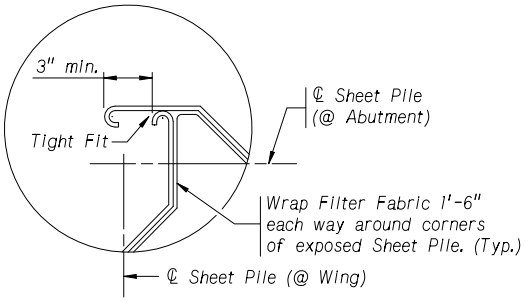

SHEET PILE CORNER DETAIL (TYP.)

Note:
Corner Filter Fabric shall be Subsidiary
to the pay item "STEEL SHEET PILING".

AC=SPCORN

- **Sheet Pile Detailing**

  The following guidelines should be used to show sheet piles on the Geology Sheet.

  1. Sheet piling sections will not be detailed in the Plans.
  2. Location of the CL sheet pile walls relative to the CL Roadway & CL Abutments.
  3. Pay quantity length along the CL sheet pile wall.
  4. Show corner detail cell (see previous section).
  5. Standard Note # 521 must be shown.

Note:

For common sheet pile sections, refer to one of the current industry handbooks.

Section 5
Special Provisions

5.B-1 – Expansion Device Installation 5.02
5.B-2 - Temporary Support 5.03
5.B-3 - Bridge Shoring 5.04
5.B-4 - Concrete Construction 5.05
5.B-5 – Concrete Sealant for Prestressed Girders 5.06
5.B-6 – Contractor's Access Bridge 5.07
5.B-7 – Contractor's Access Crossing 5.08
5.G1 - 1 ½ Inch Conduit in Bridge 5.09
5.G2 - Preparation or Removal of Existing Structure 5.10
5.G3 - Mechanically Stabilized Earth (MSE) Walls with Concrete Face Panels 5.11
5.G4 - Steel Structures 5.13
5.G5 - Concrete Construction 5.14
5.G6 - Piles and Pile Driving 5.20

5.G8 - Reinforcing Steel Supports 5.22
5.G9 - Pile Cut Off Elevations 5.23

5.G11 - Preformed Expansion Joint 5.24
5.G12 - Silicone Joint Sealer 5.26
5.G13 - Shim Concrete Payment 5.27
5.G14 - Precast or Precast / Prestressed Concrete Structural Units 5.28
5.G15 - Debonding Prestressing Strands 5.45
5.G16 - Expansion Bearing, TFE Type 5.46
5.G17 - Bridge Joint Nosing 5.47

Note: There are two different numbering formats used in Section 5.

1. 5.B-XX This format indicates Bridge Special Provisions not on file with PS&E. The "B" represents the Bridge Division; "XX" is the assigned number. These Special Provisions may at some time in the future be submitted as a Standard Special Provision.

2. 5.GYY This format indicates a Standard Special Provision, which is on file with PS&E. G for English units; "YY" represents the Division of the Standard Specifications *(i.e. 1-10);* "XX" is the assigned number. These provisions are used repeatedly in the projects without making changes. If changes are required, they should be submitted to PS&E as redline changes to a copy of the provision. This will clearly indicate what changes are to be made without comparing the documents word for word.

   All Special Provisions shall include English units.

5.B-1 – Expansion Device Installation

Any expansion device installation that fails to meet manufacturer's installation specifications will be removed and replaced with a properly installed joint at the expense of the Contractor. No payment will be made unless the manufacturer's representative certifies the installation.

5.B-2 – Temporary Support

Description

This work shall consist of furnishing and erecting temporary supports for prestressed girders to the elevation shown in the plans until the wet joint splice(s) are poured and after the post-tensioning operation had taken place.

Material Requirements

a. Temporary supports shall have adequate bracing and stiffeners to withstand the forces due to girder weight, placement and vibration of concrete.

b. The Temporary Support shall be designed by a licensed Professional Engineer registered in the State of Nebraska.

c. The Contractor shall submit a copy of the Temporary Support Plans and design computations to the Engineer for information only.

Construction Methods

a. The temporary support(s) shall be equipped so that it will allow slow and gradual lowering in case the upward deflection due to post tensioning does not cause the girders to raise off the temporary support(s) completely. Screw jacks may be used.

b. The temporary support shall be designed so that it will not settle.

Method of Measurement and Basis of Payment

a. This item shall be paid for at the contract unit price per each for the item, “Temporary Supports”.

b. This price shall be full compensation for designing, furnishing, erection, and removal of the temporary supports.

c. This item shall also include all labor, tools, equipment, and other incidentals necessary to complete the work.

5.B-3 – Bridge Shoring

Paragraph 1 of Subsection 701.02 in the 2007 Standard Specifications is void and superseded by the following:

1. a. The Contractor shall excavate and place shoring, as necessary, to insure safe access to work areas.

   b. (1) Adequate shoring must be installed by the Contractor during phased construction to retain the existing and proposed roadway fill.

   (2) The shoring shall be in place before starting the grading work for the first phase of construction.

   (3) The shoring shall not be exposed to traffic at any time.

   (4) Shoring shall be designed by a Professional Engineer registered in the State of Nebraska.

   (5) The calculations and shoring plans shall bear the seal of the designer and four copies of each shall be submitted to the Engineer before construction. These calculations and plans will be for informational purposes only. The Contractor is solely responsible for the satisfactory construction and performance of the shoring.

   (6) Shoring indicated in the plans as bridge shoring will not be pulled. Any removal required shall be made by flame cutting unless approved otherwise by the Engineer. Flame cutting will be to a minimum of 4 in. below the bottom of the roadway paving or approach slabs and as required to allow construction of the abutments or grade beams.

   (7) Shoring indicated in the plans as temporary bridge shoring shall be removed by the Contractor.

   (8) Bridge shoring and temporary shoring shall be measured for payment by the lump sum and paid for as Bridge Shoring and Temporary Bridge Shoring. This price shall be full compensation for designing, furnishing, installing, maintaining and removing the temporary shoring and for all labor, materials, equipment, tools and incidentals necessary to complete the work.

5.B-4 – Concrete Construction

Paragaph 3 of Section 704.04 of the Standard Specifications for Highway Construction is void and superceded by the following:

3. The volume of concrete piles, cast-in-place concrete piles or steel pipe piles encased in the concrete has not been included in the concrete plan quantity.

5.B-5 – Concrete Sealant for Prestressed Girders

This work shall consist of preparing the surfaces to be coated and furnishing and applying the Concrete Sealant to the designated surfaces of the girders as indicated in the plans. Surface preparation and sealant application shall be in accordance with the requirements of the coating manufacturer. After the exterior girder is removed from the forms, the outside face and bottom flange of the girder shall be cleaned and Concrete Sealant shall be applied. Color shall match number 36628 of Federal Standard No. 595B. The Contractor shall conduct all work in strict compliance with all applicable federal, state, and local laws, codes, rules, and regulations.

The Concrete Sealant shall be one of the following systems.

1. Carbocrete Sealer WB Stain System as manufactured by the Carboline Company. The Carbocrete Sealer WB Stain System is achieved by mixing Carbocrylic 3359 and the Carbocrete Sealer WB.

Prime coat:	mix ratio:	4 parts Carbocrete Sealer WB to 1 part Carbocrylic 3359
Finish coat:	mix ratio:	1 part Carbocrete Sealer WB to 4 parts Carbocrylic 3359

2. High Performance Nox-Carb as manufactured by Nox-Crete Products Group (2 coats).

3. SWD D.O.T. Bridge and Highway Concrete Sealer B97 Series as manufactured by Sherwin-Williams Company (2 coats).

The Contractor shall provide all coating materials in sealed original containers that are properly marked and labeled to allow verification, with applicable Material Safety Data Sheets, application precautions, and instructions. Labeling shall include the manufacturer's name, type of material, brand name, color designation, date of manufacture, shelf life, order number, lot and batch numbers, quantity, and application instructions.

Concrete Sealant will not be paid for directly but shall be considered subsidiary to the item "Precast/Prestressed Concrete Superstructure at Station…"

5.B-6 - Contractor's Access Bridge

CONTRACTOR'S ACCESS BRIDGE

It will be the Contractor's option to use an access bridge for a temporary crossing to construct the bridge on this project.

It shall be required that the absolute "low steel" for the Contractor's Access Bridge shall be above elevation X,XXX.X. (Note - Elevation should match elevation shown in Environmental documents.)

It will be the Contractor's responsibility to submit a plan of the access bridge to the Department of Roads Environmental Unit who will forward the plans to the Corps of Engineers for approval. Construction of the access bridge will not begin until written approval has been received from the Corps of Engineers. The Contractor should not expect to receive approval from the Corps of Engineers prior to the letting.

Bidders must submit a bid for the Pay Item "Access Bridge ___" in the schedule of items.

The Pay Item "Access Bridge ___" will be paid for as a lump sum. The bid price shall be considered full compensation for all work required for the Contractor to construct, maintain, and remove the access bridge. The Contractor will only be paid for this item if they construct the access bridge. The Contractor will be paid 90% of the lump sum when the access bridge is installed. The remaining 10% of the lump sum will be paid when the access bridge is removed.

Crushed rock surfacing and erosion control items necessary for building and maintaining the approaches to the access bridge will not be paid for directly, but shall be considered subsidiary to the Pay Item "Access Bridge ___".

If the Contractor does not plan to utilize an access bridge, they shall bid the Pay Item "Access Bridge ___ " at $0. If the Contractor bids this item at $0 and later decides to utilize an access bridge, it will be at the Contractor's expense.

No change orders will be approved to increase the cost of the "Access Bridge ___" item after award of the contract.

5.B-7 – Contractor's Access Crossing

CONTRACTOR'S ACCESS CROSSING

It will be the Contractor's option to use an access crossing to construct the bridge on this project.

Bidders must submit a bid for the Pay Item "Access Crossing" in the schedule of items.

The Pay Item "Access Crossing ___" will be paid for as a lump sum. The bid price shall be considered full compensation for all work required for the Contractor to construct, maintain, and remove the access crossing. The Contractor will only be paid for this item if they construct the access crossing. The Contractor will be paid 90% of the lump sum when the access crossing is installed. The remaining 10% of the lump sum will be paid when the access crossing is removed.

If the Contractor does not plan to utilize an access crossing, they shall bid the Pay Item "Access Crossing ___" at $0. If the Contractor bids this item at $0 and later decides to utilize an access crossing, it will be at the Contractor's expense.

Crushed rock surfacing and erosion control items necessary for building and maintaining the approaches to the access crossing will not be paid for directly, but shall be considered subsidiary to the Pay Item "Access Crossing ___".

No change orders will be approved to increase the cost of the "Access Crossing" item after award of the contract.

5.G1 – 1 ½ Inch Conduit in Bridge

Description

This work will consist of furnishing and installing a complete electrical conduit system and anchor bolt assembly as shown in the plans. The anchor bolt assembly will include nuts, washers, anchor bolts, and miscellaneous hardware. The electrical conduit system will include all conduit, junction boxes, expansion fittings, drains, liquid-tight flexible conduit, couplings, and all other miscellaneous hardware. This work will also include all equipment, tools, labor, excavation, backfill, materials, and incidentals necessary to complete the work.

Material Requirements & Construction Methods

The material requirements and construction methods shall be in accordance with the General Note for Electrical Conduit Installation shown on the plans.

Method of Measurement

The electric conduit system will be measured for payment by the number of feet (meters) shown in the plans within the limits defined for the system.

Basis of Payment

The electrical conduit system, in place and accepted by the Engineer, will be paid for at the contract unit price per foot (meter) for the item, “1 ½ inch CONDUIT in BRIDGE” (“38mm CONDUIT in BRIDGE”).

Payment is full compensation for all work prescribed in this provision.

5.G2 – Preparation or Removal of Existing Structure

Scrape samples of paint were taken from the existing structure located at Station , and were analyzed for the presence of toxic metals. Analysis of the samples shows that the existing paint contains the metals lead and chromium, and may also contain other toxic metals. Analysis indicates a concentration of PPM (parts per million) total lead and PPM total chromium.

Removal of paint containing hazardous metals at the levels indicated by this analysis could create exposure conditions above regulatory limits for health and safety requirements.

Any test results provided by the Department are for the bidding purposes only. The Contractor is required to conduct their own monitoring at the project start-up, and adjust worker protection and work practices according to the results.

5.G3 - Mechanically Stabilized Earth (MSE) Walls With Concrete Face Panels

Table 714.03 in the Standard Specifications is void and superseded by the following:

Table 714.03	
Facing Panel Select Granular Backfill Gradation	
Sieve Size	**Percent Passing**
4” (100 mm)*	100
#40 (4.75 mm)	0-60
#200 (75 mm)	0-15
*for geosynthetic reinforcement reduce from 4” (100 mm) to ¾” (19 mm)	

Paragraph 5.d. of Subsection 714.02 in the Standard Specifications is void and superseded by the following:

5.d.(1) A copy of all test results performed by the Contractor, which includes: AASHTO T 27, AASHTO T 90, AASHTO T 99, AASHTO T 104, AASHTO T 236, AASHTO T 288, AASHTO T 289, AASHTO T 290, and AASHTO T 291, shall also be furnished to the Engineer 30 days prior to beginning construction.

5.d.(2) The construction of MSE Wall structures shall not begin until the Certification(s) of Compliance for Select Granular Backfill(s) has been reviewed and verified by the NDR Geotechnical Section of the Materials and Research Division.

5.d.(3) Representative samples of select granular backfill shall be sampled in accordance with NDOR Materials Sampling Guide and submitted to NDOR Materials and Research Division.

5.d.(4) For cohesionless soils such as Select Granular Backfill, if the moisture density curve shows a well defined peak, the maximum dry density and optimum moisture content shall be determined based upon this peak. If no well-defined peak in the moisture density curve is observed, the soil shall be compacted at increasing intervals of moisture content until the maximum water content that can be retained in the compaction mold is achieved (saturation). The maximum dry density and optimum moisture content shall then be determined based on the point on the curve 1 percent below the point of saturation. The direct shear test specimen shall then be fabricated and tested at 95% compaction and at optimum moisture based on the moisture density relationship. Adequate moisture content of the backfill is necessary in the field to prevent post-construction settlements.

5.d.(5) The direct shear tests performed shall be based on wall heights for each specific project. All select granular backfill submittals from the Contractor shall be from tests made specifically for each project. No test data from previous or multiple projects will be allowed.

5.d.(6) The direct shear test is a drained test and therefore shall be sheared at a rate between 0.004 to 0.008 in/min. The rate of shear shall also be noted on the direct shear test report. Testing procedures that do not follow these guidelines will not be accepted.

5.d.(7) In addition to the Certification of Compliance for Select Granular Backfill, a 60-lb sample of the proposed material shall be submitted to NDOR 30 days prior to construction of the MSE Wall.

5.d.(8) If the Select Granular Backfill material changes or a new material is used, construction of the MSE Wall shall be halted until the material has been approved by NDOR.

Paragraph 2. of Subsection 714.05 is void and superseded by the following:

2. Excavation for the MSE Walls and leveling pads will not be measured and paid for separately, but shall be subsidiary to the appropriate pay item requiring the excavation.

5.G4 – Steel Structures

Paragraphs 2.a. and 2.b. of Subsection 708.01 in the Standard Specifications are void and superseded by the following:

a. Category “SBR” certification is required to fabricate main members of Simple Steel Bridge Structures.

b. Category “CBR” certification is required to fabricate main members of Major Steel Bridges (other than rolled beam structures).

Paragraph 10.h. of Subsection 708.03 is amended as follows:

h. Bolt Tension Method

High strength fasteners must be installed using the turn-of-nut method.

Paragraph 10.h.(2) of Subsection 708.03 is void.

Paragraph 15.f.(2) of Subsection 708.03 in the Standard Specifications is void and superseded by the following:

(2) Camber and blocking tolerances shall be according to the AWS Standard Specifications, Section 3.5.1.3. The span length is the length of girder between the end support and a field splice or between field splices.

5.G5 – Concrete Construction

CONCRETE CONSTRUCTION
(G-5-1111)

Section 704 in the Standard Specifications is amended to include the following:

> All concrete rails on bridges and approach slabs shall be cast-in-place. Slip-forming will not be permitted for concrete rails on bridges and approach slabs.

Paragraph 8. of Subsection 704.03 is amended to provide that forms for 42 inch bridge rails shall be made of steel.

The fourth subparagraph of Paragraph 8.j. of Subsection 704.03 is void and superseded by the following:

> Steel stay-in-place form material shall conform to the requirements of ASTM A 653/A 653M Coating Designation G165/Z500.

Paragraphs 8.a., b. and c. of Subsection 704.05 are void and superseded by the following:

8. Payment Deductions:

   a. The 28-day compressive strength is determined by the average strength of all cylinders made on a specific day to determine the 28-day compressive strength of all of a group's class of concrete poured that day. Concrete with a 28-day compressive strength not meeting the design compressive strength is subject to removal.

   b. If the 28-day compressive strength is less than the design compressive strength, cores may be taken within 45 days after the concrete was poured. The average of the cores will be used to determine the compressive strength. If the average of the cores is equal to or greater than 85% of the design compressive strength, the concrete is acceptable for use and is not subject to removal or a pay reduction. Cores will be taken by the Department at no cost to the Contractor.

   c. If either the 28-day compressive strength or the average core strength is less than the design strength and the Engineer determines that the concrete is acceptable for use, the concrete is subject to a payment deduction. The pay deduction is shown below:

$$\frac{2 \times (\text{Design Compressive Strength} - \text{28-day Compressive Strength})}{\text{Design Compressive Strength}} = \text{Percent Reduction}$$

Or

$$\frac{2 \times (\text{Design Compressive Strength} - \text{Average Core Compressive Strength})}{\text{Design Compressive Strength}} = \text{Percent Reduction}$$

CONCRETE BRIDGE FLOORS
(10-DAY WET CURE)
(G-5-1014)

The following Special Provision applies to concrete decks on girder bridges for new bridges and complete deck replacements. Slab bridges and partial deck replacements shall be cured in accordance with Section 706 of the specifications.

Paragraph 8. i of Subsection 704.03 in the Standard Specifications is amended to include the following:

8.i.(4) Reinforcing steel and form work for bridge curbs and bridge rails shall not be placed until after the 10-day wet curing.

Paragraph 14 of Subsection 704.03 in the Standard Specifications is void and superseded by the following:

14. Bridge Deck Curing in Cold Weather

a. The following requirements shall govern the placement of bridge deck concrete when the temperature will be less than 40^0F during the 10-day wet curing period.

(1) The temperature of the concrete shall not be less than 50^0F immediately after being placed.

(2) The Contractor shall furnish heating equipment and/or enclose and protect the structure in such a way that the concrete shall be maintained at a temperature between 50^0F and 100^0F for the first 72 hours after the concrete has been placed, and at a temperature of between 40^0F and 100^0F for the next 168 hours.

(3) After 240 hours of curing is complete, the fall of the concrete temperature shall not be at a rate faster than 5^0F/hour.

b. The Contractor shall assume all risk connected with the placing of concrete during freezing weather, and permission given by the Engineer to place concrete during such time will in no way relieve the Contractor of the responsibility for satisfactory results. Any concrete showing damage from freezing shall be rejected.

Paragraph 5 of Subsection 706.03 in the Standard Specifications is void and superseded by the following:

5. No work shall be performed on the bridge deck, including forming and placing reinforcement for concrete curbs or railing until the concrete deck has cured for 10 days.

Paragraphs 8, 9, and 10 of Subsection 706.03 in the Standard Specifications are void and superseded by the following:

8. a. Finishing

(1) Immediately following the finishing machine, the Contractor shall give the bridge floor surface a drag finish with wet burlap, carpet or a soft bristled broom. The drag finish shall create a uniform, fine-grained finish on the sealed concrete surface.

b. Grooving

(1) Transverse tining in plastic concrete of bridge decks (and approaches on new bridges and bridge deck replacements) will not be allowed unless otherwise stated in the contract documents.

(2) The Contractor shall cut longitudinal grooves into hardened concrete surfaces using a mechanical cutting device. Perform longitudinal grooving after surface correction grinding.

(3) The longitudinal grooves shall be:

(i) 1/8 inch ± 1/64 inch wide,
(ii) 1/8 inch to 1/4 inch (3 mm to 6 mm) deep, and
(iii) Uniformly spaced at 3/4 inch intervals measured center to center of groove.

(4) Longitudinal grooving shall terminate approximately 6 inches (150 mm) from bridge expansion joints.

(5) Longitudinal grooving on the bridge deck and approach sections shall be discontinued 2 feet from the bridge curb, rail, raised medians, or barriers unless otherwise indicated on the plans.

(6) For phased bridge and bridge approach construction:

(i) The Contractor may cut longitudinal grooves in the hardened concrete at the end of each phase of construction or wait until all phases have been completed. If the Contractor elects to delay cutting of the longitudinal grooves until completion of all phases, apply an interim broom finish on the concrete deck and bridge approach during placement for all phases opened to traffic.
(ii) The Contractor shall finish all longitudinal grooving for all phases within 30 calendar days following completion of the last phase of the bridge.
(iii) The interim broom finish will not be allowed as a surface texture when opened to traffic over a winter season. If the interim broom texture is present and the Contractor is not in a position to finish all phases of the bridge, the Contractor shall cut longitudinal grooving into the hardened concrete in order to establish an acceptable driving surface texture for the winter season.

(7) Grooves shall be constructed using multi-blade saw cutting equipment, fitted with diamond-tipped circular saw blades.

Before grooving operations, two approved gauges to verify groove depth shall be supplied. The gauges shall be accompanied by the manufacturer's instructions for their use.

During grooving operations, the groove dimensions will be checked at random. If the minimum groove depth has not been achieved, grooving operations shall stop and the necessary adjustments shall be made.

(8) Sidewalks and top of curbs shall not be grooved and shall receive a final finish with a fine – bristle broom.

9. Curing

a. For this Specification, the bridge deck is defined as the concrete deck and pavement cast between the bridge grade beams. Approaches outside the grade beams are excluded.

b. The Contractor shall cure the concrete deck with wet burlap for at least 240 hours.

(1) The Contractor shall place uniformly saturated wet burlap on the concrete no later than 20 minutes after the finishing machine passes.
(2) The burlap shall be thoroughly wetted prior to placing it on the concrete. The burlap shall be kept continuously wet by means of a sprinkling or wetting system for the 10 days.
(3) The wet burlap shall be secured or weighed down so that it remains in contact with the concrete surface.
(4) After 96 hours, the Contractor may place white opaque polyethylene film over the wet burlap to reduce the amount of water needed.

c. After the 10 day wet cure, the Contractor shall apply an approved white pigment curing compound within 45 minutes of removing the wet burlap.

(1) The total rate of combined applications shall be a minimum of 1 Gal/150 SF of surface area.
(2) The Contractor shall cure the deck with the white pigment curing membrane for an additional 7 days. The Contractor may work on the bridge concrete rail during the 7 days provided caution is used to limit damage to the membrane.
(3) Curing compound shall not be applied to construction joints or reinforcing steel.

d. The Contractor must provide a list of equipment, equipment certification, and the number of personnel that will be dedicated to the curing operation at least 24 hours before the actual casting date.

e. The Contractor shall be responsible for the repair of all visible cracks more than 3 inches (75 mm) in length that develop on the bridge deck up to the time the project is accepted at no additional cost to the Department.

f. Cracks shall be repaired with an approved bridge deck crack sealant (methacrylate). Crack sealants shall be installed in accordance with the manufacturer's recommendations.

g. Concrete Bridge curbs and rails shall be cured in accordance with Subsection 704.03.

10. Grinding

a. The grinding and grooving shall not be done until after the 17 days of curing is complete.

b. Bridge decks shall be ground for smoothness in accordance with Section 733.

(1) For bridge decks and approaches that are not covered by Section 733:

i. The Contractor shall test the cured concrete for surface irregularities with either a 10 foot straightedge placed or operated parallel to the centerline of the roadway or some other device for measuring deviations from a plane. Variations greater than 1/8th inch shall be plainly marked for removal, except that for decks which are to receive a subsequent overlay course greater than 1 inch thick, where ¼ inch variations are allowed.

ii. The Contractor shall grind or cut irregularities that exceed the above limits. Bush hammering or other impact methods are not allowed.

Paragraph 15 of Subsection 706.03 in the Standard Specifications is void and superseded by the following:

15. Time for Opening Bridge Floor to Traffic

a. The Contractor shall not open the bridge floor to traffic until approval has been given by the Engineer. The Engineer may open the bridge when the concrete has reached a minimum age of 17 days and has developed a compressive strength of 3500 psi.

b. Construction equipment will not be allowed on the deck until after the 10 day wet curing period. Vehicles needed for construction activities and weighing less than 4.0 kips, and comparable materials and

equipment loads, shall be allowed on any span only after the last placed deck concrete has attained a compressive strength of at least 2.4 ksi. Loads in excess of the above shall not be carried on bridge decks until the deck concrete has reached 80% of the minimum compressive strength prescribed on the plans and after the 10 days wet curing period.

Paragraph 1 of Subsection 706.05 in the Standard Specifications is amended to include the following:

	Pay Item	**Pay Unit**
1.	Bridge Deck Grooving	SY

5.G6 – Piles and Pile Driving

PILES AND PILE DRIVING
(G-6-0611)

Paragraph 1.m.(1) of Subsection 703.03 of the Standard Specifications for Highway Construction is void and superseded by the following:

> All welding to be done on steel piles shall be in accordance with the plans and the applicable requirements of Section 708 in the Standard Specifications. Welder qualification certification is required and must be submitted to the Bridge Fabrication Manager for approval prior to any welding.
>
> All field welding on steel piles shall be done in the SMAW process using electrode E7018.

For bridges with design live load "HL-93", the tables in paragraph 4.c. of Subsection 703.03 (on pages 444 and 445) in the Standard Specifications are void and superseded by the following:

Dynamic Formulas (English and Metric)

Diesel Hammers:

$P = \frac{4.0\,E}{S+0.5}$ For all piles driven from the top with a single-acting diesel hammers (English)

$P = \frac{3.27\,E}{S+12.7}$ For all piles driven from the top with a single-acting diesel hammers (Metric)

Where:

P = the bearing capacity, in kips (English) or kN (Metric)

W = the mass of the ram, in kips (English) or kg (Metric)

M = the mass of the pile and driving cap, in kips (English) or kg (Metric)

S = the average penetration per blow, in inches (English) or millimeters (Metric), of the last 10 blows for diesel hammers

H = the height of fall of the ram, in feet (English) or meters (Metric) (less twice the height of bounce for gravity and steam hammers)

E = the energy per blow in foot-kips (English) or meter-kilogram (Metric). For single-acting diesel hammers, E = W x H

Unless permitted by the NDR Geotechnical Section, all piles driven with hammers other than single-acting diesel hammers shall be tested with the Pile Driving Analyzer to verify capacity.

$P = \frac{4.9\,WH}{S+0.35} \times \frac{W}{W+M}$ For gravity hammers

$P = \frac{4.9\,E}{S+0.1} \times \frac{W}{W+M}$ For steam hammers

$P = \frac{2.2\,E}{S+0.1}$ For driving mandrel driven pile shells

Paragraph 7.a. of Subsection 703.03 is void and superseded by the following:

a. “Practical Refusal” occurs when actual bearing capacity is 2.0 times the Design Pile Bearing.

Paragraph 2. of Subsection 703.05 is void and superseded by the following:

2. a. (1) Provided that the Contractor furnishes the Engineer signed purchase orders for bearing and sheet piling, authorized “cutoff” of bearing and sheet piling shall be made at the invoice price per linear foot (meter) of bearing piling, and per square foot (meter) of sheet piling.

(2) The signed purchase orders shall be furnished at the pre-construction conference.

b. In those cases where signed purchase orders for bearing and sheet piling are not furnished at the pre-construction conference, authorized “cutoff” of bearing and sheet piling shall be made at 60 percent of the piling's contract unit price.

c. No payment is made for "cutoff' beyond the order length.

d. When bearing or sheet pile are authorized for cutoff and are suitable for use as spliced material for the same purpose on the project, the length of material subsequently driven as service piling shall be deducted from the payment for cutoff. No piece of piling can qualify for more than one measurement as pay cutoff.

Paragraph 3. of Subsection 703.05 is void and superseded by the following:

3. Splices ordered by the Engineer shall be paid for at 5 times the unit bid price (2 times the unit bid price for Metric projects) for HP steel piling, pipe, piling, and cast-in-place piling; and at 20 times the unit bid price (7 times the unit bid price for Metric projects) for driving and build-up splices for precast/prestressed concrete piling.

5.G8 – Reinforcing Steel Supports

Paragraph 3.b.(2) of Subsection 707.03 of the Standard Specifications is void and superseded by the following:

> Reinforcing steel in concrete decks and slabs shall be positioned on plastic coated supports or chairs to accurately maintain the specified clearance to the surface of the concrete. Supports shall be spaced at distances not greater than 3 feet for # 4 top bars or 4 feet for all other reinforcing.

5.G9 – Pile Cut Off Elevations

Table 203.01 of the Standard Specifications is void and superseded by the following:

Table 203.01 – Pile Cut Off Elevation

Excavation or embankment areas	2 feet (600 mm) below finished grade
Stream Channels (between high banks)	2 feet (600 mm) below defined flowline elevation
All other areas	2 feet (600 mm) below natural ground

5.G11 - Preformed Expansion Joint

PREFORMED EXPANSION JOINT
(G-11-1212)

Section 734 of the Standard Specifications is void and superseded by the following:

Description

1. This work shall consist of furnishing and installing a Preformed Expansion Joint in a preformed gap at the locations and limits shown on the plans.

2. The Preformed Expansion Joint shall be either a Precompressed Polyurethane Foam Joint or a Preformed Silicone Joint, as indicated in the plans.

    a. When the item is “Precompressed Polyurethane Foam Joint, Type ___” the joint shall be a Precompressed Polyurethane Foam Joint of the type indicated in the plans.
    b. When the item is “Preformed Silicone Joint, Type ___”, the joint shall be a Preformed Silicone Joint of the type indicated in the plans.
    c. When the item is “Preformed Expansion Joint, Type ___”, the joint may be either a Precompressed Polyurethane Foam Joint or a Preformed Silicone Joint of the type indicated in the plans.

Material Requirements

1. Precompressed Polyurethane Foam Joints:

    a. PPF Joint shall be precompressed self-expanding polyurethane foam with factory applied silicone facing on top of the foam.
    b. PPF joints shall be ordered for the joint material dimension shown in the plans.
    c. Approved PPF Joint systems are shown on the NDOR Approved Products List under Precompressed Polyurethane Foam Joint, Type A or B.

2. The approved Preformed Silicone Joint systems are shown on the NDOR Approved Products List under Preformed Silicone Joint, Type A or B.

3. Primers, epoxy adhesives, and silicone sealants shall comply with the manufacturer’s recommendations.

4. Materials shall be resistant to ozone, ultraviolet rays, petroleum products, solvents, industrial cleaners, corrosive vapors and acids.

5. Joint material shall be delivered to the Contractor’s storage area and to the job site in the Manufacturer’s original undamaged containers with wrapping intact. Storage of joint material shall be in a dry, enclosed area, off the ground, between 60°F (16°C) and 75° F (24°C) and out of direct sunlight until immediately prior to installation.

Construction Methods

1. The installation of the Preformed Expansion Joint and the adhesives shall be completed according to the manufacturer's specifications. Additional field applied silicone is required on both sides of the top of the joint. Any installation that fails to meet the manufacturer's specifications shall be removed and replaced at no cost to the Department.

2. The installation instructions and specifications shall be given to the Engineer 7 days prior to the installation.

3. The Preformed Expansion Joint shall be installed in the presence of the Engineer.

4. The joint opening in the concrete shall be cleaned by sandblasting and shall be dry and free of oil and other deleterious materials before the installation of the Preformed Expansion Joint.

5. The installation of the Preformed Expansion Joint shall be completed between 45°F (7°C) and 90°F (32°C).

6. Any joint material damaged during corrective grinding shall be replaced at no cost to the Department.

Method of Measurement

1. The Preformed Expansion Joint shall be measured for payment by the linear foot (meter) of the joint properly installed and accepted by the Engineer.

2. Pay limits for the Preformed Expansion Joints shall be the horizontal distance from end to end along the centerline of the joint assembly at the locations shown in the plans and 1 foot (0.3 m) upward at the gutter line if shown.

Basis of Payment

1.

Pay Item	Pay Unit
Preformed Expansion Joint, Type ___	Linear Foot (LF) [Meter (m)]
Precompressed Polyurethane Foam Joint, Type ___	Linear Foot (LF) [Meter (m)]
Preformed Silicone Joint, Type ___	Linear Foot (LF) [Meter (m)]

2. Payment is full compensation for furnishing and installing the Preformed Expansion Joint and for all labor, equipment, tools and incidentals necessary to complete the work.

5.G12 – Silicone Joint Sealer

Silicone Joint Sealer

Description

1. This work shall consist of providing and installing silicone joint sealers in a preformed roadway gap at the locations and limits shown in the plans.

Material Requirements

1. The approved products for the Silicone Joint Sealers are shown on the NDOR Approved Products List under Silicone Joint Sealer. Care shall be taken to order the right material and backer rod according to the dimensions of the joints shown on the plans.

2. Storage

   a. Sealant material shall be delivered to the storage area and to the job site in the manufacturer's original, undamaged containers with wrapping intact.

Construction Methods

1. The installation of the Silicone Joint Sealers shall be completed according to the manufacturer's specifications. Any installation that fails to meet the manufacturer's specifications shall be removed and replaced at no cost to the NDOR.
2. The Silicone Joint Sealers Installation Instructions / Specifications shall be given to the Engineer 7 days prior to the installation.
3. The installation of the Silicone Joint Sealers shall be done in the presence of the Engineer.
4. The joint opening in the concrete shall be cleaned by sandblasting and shall be dry before the installation of the Silicone Joint Sealers.
5. As the material is self leveling, the Contractor is responsible for containing it in the joint until it has retained its set and may need to apply more material as needed to get the desired depths at all locations.

Method of Measurement

1. The silicone joint sealer shall be measured for payment by the linear foot (meter) of the joint installed and accepted by the Engineer.
2. Pay limits for the silicone joint sealer shall be the horizontal distance from end to end along the centerline of the joint assembly at the locations shown in the plans.

Basis of Payment

1.

Pay Item	**Pay Unit**
Silicone Joint Sealer	Linear Foot (LF) [Meter (m)]

2. Payment is full compensation for all labor, materials, tools and incidentals necessary to complete the work.

5.G13 - Shim Concrete Payment

Paragraph 1. of Subsection 706.04 in the Standard Specifications is void and superseded by the following:

1.a. The Department will pay plan quantity when items are constructed according to the plan geometrics.

b. The Contractor may request that the Department recalculate the quantity for the concrete haunch, using the girder shim shots on a prestressed concrete girder bridge.

Subsection 706.05 is amended to include the following:

If the recalculated concrete quantity of the concrete haunch on a prestressed concrete girder bridge is greater than the plan quantity, the additional quantity will be paid at 1.33 times the concrete invoice price. The Contractor shall furnish the Engineer signed invoices for the Concrete Class _____ for Bridges prior to the request for recalculating the concrete haunch quantity.

PRECAST OR PRECAST/PRESTRESSED CONCRETE STRUCTURAL UNITS (G-14-0414)

Section 705 in the Standard Specifications is void and superseded by the following:

Description

1. This work consists of all labor, materials, and equipment required in the production of Precast or Precast/Prestressed Structural Units.

2. Contract plans shall be supplemented by Contractor-provided working drawings submitted in accordance with Subsection 105.02.

Material Requirements

1. The materials used shall meet the requirements prescribed in Table 705.01.

Table 705.01

Material Requirements	
Applicable Material	**Section**
Concrete	1002
Admixtures	1007
Water	1005
Fine Aggregate	1033
Course Aggregate	1033
Fly Ash	1008
Spiral Reinforcing Wire	1023
Prestressed Steel Strand	1026
Post-Tensioning Assembly Steel	1025

2. The concrete strength used in the manufacture of Precast or Precast/Prestressed Structural Units shall be shown in the plans.

3. The Contractor shall be responsible for the Concrete Mix Design. Concrete Mix Designs shall be proportioned in accordance with ACI Standard 318 and the following additional requirements:

   a. The mix designs or change to a mix design shall be submitted for approval to the Engineer 4 weeks before beginning any concrete work. Refer to Table 705.03 for required testing for any mix design.

   b. Concrete shall consist of Type I, Type II, or Type III Portland cement, aggregate, air-entraining admixture, and water. Concrete may also contain Class C or Class F fly ash, Slag Cement or Silica Fume and ASTM C 494 approved Type A, Type B, Type D, and Type F admixtures.

   c. No change shall be made in the approved Concrete Mix Design during the progress of the work without the prior written permission of the Portland Cement Concrete (PCC) Engineer.

4. Reinforcement shall be furnished, handled, stored, and placed in accordance with the requirements of Section 707.

5. Welding of reinforcing steel is prohibited unless specifically authorized by the Engineer.

6. Prestressing steel other than that specified in the plans or Special Provisions may be furnished with the approval of the Engineer. The yield and ultimate strength and other pertinent characteristics of this steel shall be submitted to the Engineer.

7. The area of broken wires shall not exceed 2% of the cross sectional area of the stressing strands when the number of strands is 14 or less.

8. No more than 1 broken wire will be allowed in a single strand.

9. Bars for post-tensioning shall be of high tensile strength steel. They shall be equipped with wedge type end anchorages which will develop the minimum specified ultimate bar stress on the nominal bar area. The physical properties of the bar steel determined by static tensile tests shall conform to the requirements in Table 705.02.

Table 705.02

High Strength Steel Post-Tensioning Requirements	
Ultimate Stress	145,000 psi (1000 MPa) minimum
Stress at 0.7% Elongation	130,000 psi (900 MPa) minimum
Stress at 0.3% Elongation	75,000 psi (500 MPa) minimum
Elongation in 20 Diameters	4% minimum
Modulus of Elasticity	25,000,000 psi (172,00 MPa) minimum
Diameter Tolerance	Plus or Minus 0.1 inch (2.5 mm)

10. Materials specified for testing shall be furnished 30 days before the anticipated time of use. All materials required for testing shall be furnished by the Contractor to the Engineer without additional costs to the Department. The Engineer shall select a representative sample length for the various prestressed steel as follows:

    a. Six feet (1.8 m) for wires requiring heading.

    b. For wires not requiring heading, sufficient length to make up one parallel-lay cable 6 feet (1.8 m) long consisting of the same number of wires as the cable to be furnished.

    c. Six feet (1.8 m) between near ends of fittings for a strand furnished with fittings.

    d. Six feet between threads at the ends of bars furnished with threaded ends.

11. If the anchorage assemblies are not attached to prestress steel samples, 2 anchorage assemblies shall be furnished for testing, complete with distribution plates of each size or type of prestress steel to be used.

12. Any defective material shall be rejected.

13. Concrete quality control shall be the responsibility of the Contractor. Concrete shall be sampled and tested as shown in Table 705.03.

    a. The Contractor's test results are the basis for acceptance. If the Department's quality assurance testing is not within 10% of the Contractor's test results on any given sets of three cylinders, the Engineer will initiate an investigation to find the cause of the variation between the Contractor's and the Department's test results. While the investigation is in progress, the Department will continue with quality assurance testing as shown in Table 705.03. Any structural units represented by these tests will be subject to rejection.

    b. If more than one set of cylinders is required per Table 705.03 for a single Precast or Precast/Prestressed Concrete Structural Unit, each set of three cylinders will be averaged separately. All averaged sets must meet the minimum design strengths.

    c. If 40 cubic yards makes more than one Precast or Precast/Prestressed Concrete Structural Unit and the Contractor elects to make the minimum set of cylinders, that single set of cylinders will be used to determine the girder strength for all of the Precast or Precast/Prestressed Concrete Structural Units that set of cylinders represents. If the Contractor elects to make more than the minimum cylinders required, in order to represent each Precast or Precast/Prestressed Concrete Structural Unit, only the set of cylinders representing the corresponding unit will be used to determine the strength of that unit.

Table 705.03 Precast Plant Approval		
Plant Certification	**Contractor** Prestressed: Shall submit PCI Certification every two years to the PCC Engineer. Precast: Precast plants that are not PCI certified will be NRMCA certified.	**NDOR** Approve and add to site Manager.
Quality Control & Quality Assurance at Plant Site		
Frequency	**Daily**	**Weekly**
Number of Acceptance Cylinders to be fabricated	**Contractor** **Quality Control** - Will make a minimum of six cylinders for every 40 cubic yards. - NDOR personnel will record results and enter into site manager. These samples will be identified, and tagged by NDOR. NDOR shall have access to these QC samples at all times.	**NDOR Personnel** **Quality Assurance** - Will make a minimum of three sets of three cylinders per mix design per week of production. - The NDOR samples will be taken at the same location within a load of concrete as the Contractor's QC samples. NDOR shall choose the location of these samples within the load/girder. - Enter results into Site-manager.
Required Testing for Acceptance Cylinders	**Contractor Laboratory** -**7 Day Compressive Strength:** three cylinders averaged at Contractor's discretion. -**28 Day Compressive Strength:** three cylinders averaged. **-56 Day Compressive Strength:** The remaining three cylinders will be tested for 56 day compressive strengths; only if the 28 day compressive strength failed to meet specification requirements. **NOTE:** No cylinders are to be discarded until all design strengths are met and the prestressed unit(s) is accepted. - Air Content – ASTM C 231 - Slump Flow – ASTM C 1621 - Visual Stability Index (VSI) Appendix of ASTM C 1611 is required.	**NDOR Laboratory:** **-28 Day Compressive strength:** Three cylinders averaged. • The 28 day compressive strength is to be used for validation of the Contractor's strength. • **NOTE: If the Contractor's and Department's 28 day test results are not within 10%, the Engineer will investigate the variation.** • NDOR will be on-site to witness the testing for all Acceptance Cylinders. - Air Content – ASTM C 231 - Witness Slump Flow & Visual Stability Index
Inspection at Plant Site		
Frequency	**Weekly**	
Required Inspection	Refer to policy in the Material & Sampling Guide for the following: • Precast/Prestressed Concrete Plant Inspection-NDOR Inspector • Precast/Prestressed Concrete Plant Inspection-Fabricator Inspector	

Table 705.04 Mix Design Approval/ Change Cement or Aggregate Source		
Trial Mix	**Contractor** Data from 15 trial tests as a minimum (New Mix Design) Data from 5 trial tests as a minimum (Change in Cement or Aggregate)	**NDOR** Contractor is responsible to notify PCC Engineer 4 weeks in advance.
Testing	**Contractor** - Compression Strength – AASHTO T 22 - Flexure Strength of concrete (using simple beam with third-point Loading) - ASTM C 78 - Air Content – ASTM C 231 - Slump Flow – ASTM C 1611 - Passing Ability by J-Ring Method - ASTM C 1621 - Visual Stability Index (VSI) - Appendix of ASTM C 1611 is required.	**NDOR** Sampling and Testing two of the Contractor's trial test. - Compression Strength – AASHTO T 22 - Flexure Strength of concrete (using simple beam with third-point Loading) - ASTM C 78 - Air Content – ASTM C 231 - Witness (Slump Flow & J Ring)
Approval	**Contractor** Submit data from lab testing to PCC Engineer.	**NDOR** - Data review / ensure specification are met - Approve mix design - Add to Site Manager with NDOR Mix Design Number
Change to Admixtures in Approved Mix Design		
Testing/Approval	**Contractor** Contractor is responsible to notify the PCC Engineer 3-4 weeks in advance. - Air Content – ASTM C 231 - Slump Flow – ASTM C 1621 - Passing Ability by J-Ring Method - ASTM C 1621 - Visual Stability Index (VSI) Appendix of ASTM C 1611 is required.	**NDOR** - Air Content – ASTM C 231 - Witness Slump Flow, Passing Ability and Visual Stability Index

14. Plant Approval Requirements:

    a. All Prestressed Concrete Structural Units shall be produced in a Precast/Prestressed Concrete Institute (PCI) certified plant.

    b. All concrete for Precast/Prestressed Concrete Structural Units shall be produced at a PCI or NRMCA certified plant.

        (1) Whenever there is reason to suspect a problem with the equipment, any or all of the equipment may be inspected.

    c. The method of manufacture and quality of concrete are also subject to Department approval/inspection.

d. A Contractor proposing to furnish Precast or Precast/Prestressed Structural Units shall submit the following additional details to the Department concerning the method of manufacture:

(1) Type, number, size, and location of the prestressing elements, and the name of the manufacturer of the post-tensioning or pretensioning elements.

(2) Complete information as to type, size, and method of installation of devices for anchoring post-tensioning elements.

(3) The proposed manufacturing methods and the plans and design details of proposed casting beds and forms.

e. The use of portable pretensioning beds for the manufacture of concrete structural units or piles will not be allowed.

15. Mix Design Approval Requirements:

a. The results of 15 individual trial mixes shall be produced using the same process as the plants normal production run. All test results of individual trial mixes shall be given to the Engineer. The test results collected shall include the following:

(1) The release and 28-day compressive strength test results shall conform to AASHTO T 22.

(2) The water/cement ratio.

(3) The air content (between 2.0 percent and 6.0 percent inclusive).

(4) The cement, fly ash, Slag Cement and Silica Fume content.

(5) The amount of fine aggregate, coarse aggregate, and sand and gravel.

(6) Slump Flow test results shall conform to ASTM C 1611

(7) Passing Ability by J-Ring Method test results shall conform to ASTM 1621.

(8) Visual Stability Index (VSI) test results shall conform to the Appendix of ASTM C 1611.

(9) Flexure Strength of concrete at 28-day test results shall conform to (using simple beam with third-point loading) ASTM C 78.

b. Any change of cement or aggregate source which must be on the NDR Approved Product List shall require 5 new individual trial mixes. Refer to Table 705.04 for required testing procedures.

c. Any changes using admixtures, the Contractor shall verify the properties of the concrete. Refer to Table 705.04 for the required testing procedures.

d. The compressive strength test results of 15 individual trial mixes shall be performed by the Contractor. An individual trial mix shall consist of two sets of three cylinders with three cylinders being averaged at release and at 28-day. One set shall be taken within the first third of the load and the second set shall be taken within the two thirds of the load.

e. All tests for elastic modulus and compressive strength will be conducted using 4 inch x 8 inch (100 mm x 200 mm) cylinders.

f. The flexure strength test results of 15 individual trial mixes shall be performed by the Contractor. An individual trial mix shall consist of two sets of two beams with two beams being averaged at 28-day. One set shall be taken within the first third of the load and the second set shall be taken within the two thirds of the load.

Construction Methods

1. The Contractor shall construct Precast or Precast/Prestressed Structures and piles as shown in the plans.

2. The Contractor shall provide the Engineer a 4-week production schedule that is updated as necessary. If the Engineer is given less than 1 NDOR work day notice of a schedule change, then the fabricator may not proceed until the Engineer has reviewed the change. The Engineer may observe any or all of the procedures and shall have access to all reported data at any time during fabrication. The Engineer shall report any inconsistencies to the job superintendent.

3. The concrete producer shall report the following information for each load of concrete used to fabricate girders:

   a. Brand, mill, type, certified test number, and weight of cement.

   b. Brand, mill, class, certified test number, and weight of fly ash.

   c. Type, source, location, weight, and free moisture content for each aggregate. Aggregate moisture shall be determined according to NDR T 506 for each half day.

   d. Source, type, name, and amount of each admixture.

   e. Water added during batching and at placement site.

   f. Time water and cement are initially mixed into the batch.

   g. Time placement is completed.

4. Tensioning:

a. Methods:

(1) In all methods of tensioning, the stress induced in the prestressing elements shall be measured by the Contractor both with jacking gauges and by elongation of the elements; and these results shall be the same within a 5% tolerance.

(2) Means shall be provided for measuring the elongation of reinforcement to at least the nearest 1/8 inch (3 mm).

(3) All steel stressing devices, whether hydraulic jacks or screw jacks, shall be equipped with accurate reading calibrated pressure gauges, rings, or other devices as applicable to the jack being used.

(4) All devices shall be calibrated and, if necessary, recalibrated so as to allow the stress in the prestressing steel to be computed at all times.

(5) A certified calibration curve shall accompany each device.

(6) Safety measures must be taken by the Contractor to prevent accidents due to possible breaking of the prestressing steel or the slipping of the grips during the prestressing process.

b. Measurement:

(1) Pressure gauges, load cells, dynamometers, and any other devices used in determination of loads and/or pressures shall be accurate in their effective range within a 2% tolerance.

(2) Such equipment shall be calibrated by an approved testing laboratory.

(3) The Contractor's laboratory shall furnish calibration curves for each device and shall certify the curves as being accurate and verifiable.

(4) The calibration of tensioning devices shall be accomplished in place.

(5) The configuration of jacks, gauges, and other components during calibration shall be exactly the same as during the actual stressing operation.

(6) The method of calibration shall be as approved by the Engineer.

(7) Tensioning devices shall be calibrated at least once a year and at any time a system appears to be operating in an erratic or inaccurate manner or gauge pressure and elongation measurements fail to correlate.

c. If the strand tension indicated by the gauge pressure and by elongation methods fail to agree within 5%, the operation shall be carefully checked and the source of error determined before proceeding further.

d. Measurement Consideration:

(1) The Contractor's elongation and jacking pressure measurements shall make appropriate allowance for friction and all possible slippage or relaxation of the anchorage.

(2) For pretensioned members, independent references shall be established adjacent to each anchorage by the Contractor to indicate any yielding or slippage that may occur between the time of initial stressing and final release of the cables.

(3) The Contractor may tension straight post-tensioned tendons from one end. Curved tendons shall generally be stressed by simultaneous jacking from both ends.

e. In all stressing operations, the Contractor shall keep stressing force symmetrical about the member's vertical axis.

5. Stressing Procedure:

a. Prestressing methods are shown in the plans. When the Contractor elects to use a method other than that shown in the plans, the Contractor shall submit complete shop plans for the proposed method.

b. Pretensioning Method:

(1) The amount of stress to be given each strand by the Contractor shall be as shown in the plans.

(2) All strands to be prestressed in a group shall be brought to a uniform initial tension before being given their full pretensioning. This uniform initial tension of approximately 1,000 to 2,000 pounds (450 to 900 kg) shall be measured by a dynamometer or other approved means so that it can be used as a check against the computed and measured elongation.

(3) After initial tensioning, either single strand or multiple strand groups shall be stressed until the required elongation and jacking pressure are attained and reconciled within the 5% tolerance.

(4) With the strand stressed in accordance with the plan requirements and these *Specifications*, and with all other reinforcing in place, the Contractor shall cast the concrete to the lengths desired. Strand stress shall be maintained between anchorages until the concrete has reached the compressive strength specified in the plans.

c. Post-tensioning Method - For all post-tensioned elements, the Contractor shall set the anchor plates exactly normal in all directions to the axis of the bar or tensioning strand. Parallel wire anchorage cones shall be recessed within the beams. Tensioning shall not be done until the concrete has reached the compressive strength specified in the plans.

d. Combined Method - In the event that the girders are manufactured with part of the reinforcement pretensioned and part post-tensioned, the applicable portions of the requirements listed above shall apply to each type.

6. Forms:

a. Forms for Precast or Precast/Prestressed Concrete Structural Units shall conform to the requirements for concrete formwork as provided in Subsection 704.03.

b. Precast or precast/prestressed forms shall be accessible for the vibration and consolidation of concrete.

c. If the ambient temperatures are above 90°F (32°C), precautions shall be taken so the forms, reinforcing steel and steel beams of structural units will be the ambient temperature.

7. Placing Concrete:

a. The Contractor shall provide the Department a 4-week production schedule that is updated as necessary. Unscheduled production changes may delay fabrication. Unscheduled production may result in rejection of Precast or Precast/Prestressed Concrete Structural Units.

b. The Engineer may observe any or all of the procedures. The Contractor shall provide access to all reported data at any time during fabrication. The Engineer will report any inconsistencies to the job superintendent.

c. Concrete shall not be placed before completing the forming and placing of reinforcement.

d. Placing Procedure:

(1) Concrete shall be placed continuously in each unit, taking care to avoid horizontal or diagonal planes of weakness.

(2) However, if there is a delay in delivery of concrete or for some other reason placement is interrupted for more than 30 minutes, then the concrete shall be rejected.

e. Consolidation:

(1) Whether concrete requires vibration or self-consolidating concrete is used, special care shall be exercised to work and consolidate the concrete around the reinforcement and to avoid the formation of stone pockets, honeycombs and other defects.

(2) Self-consolidated concrete (SCC) shall not be vibrated. Rodding of Self-Consolidated Concrete (SCC) is permissible in areas of tight reinforcement.

(3) The other concrete shall be consolidated by vibrating.

f. The concrete shall be a homogenus mixture and shall not contain cement balls.

g. The forms shall be overfilled, the excess concrete screeded off, and the top surfaces finished to a uniform, even texture.

h. Each Precast or Precast/Prestressed Concrete Structural Unit shall be stamped or marked with an identification number and its manufacture date.

i. Environmental Limitations:

(1) The optimum range of concrete temperatures from the time the concrete is completely mixed until the beginning of the presteam segment of the steam curing cycle shall be 50° to 95°F (10° to 35°C). Failure to operate within the optimum range shall be cause for curtailment of operations. During the presteam segment of the curing cycle, the temperature of the concrete shall not exceed 100°F (38°C) nor fall below 50°F (10°C). These temperature restrictions apply when heat is supplied to the curing enclosure prior to initial set.

(2) When placing concrete under cold weather conditions (ambient air temperature less than 36°F [2°C]), the Cold Weather Specifications in Sections 1002 and 704 shall be followed.

(3) Forms and reinforcing materials shall be preheated to a minimum temperature of 40°F (4°C) and a maximum temperature not to exceed that of the concrete at the time of placement.

(4) The Contractor may preheat the drums of the mixer-trucks to the limits set for forms and reinforcing, but under no condition shall heat be applied to the drums while they contain any of the batch materials or concrete.

8. Curing:

a. General:

(1) The Contractor shall cure the concrete with wet burlap, waterproof covers, polyethylene sheets, or liquid membrane-forming compounds. Curing with liquid membrane-forming compounds shall be accomplished in accordance with the requirements of Section 1012 and Subsection 704.03, except that liquid membrane-forming compounds shall not be used on that portion of precast/prestressed concrete girders, twin tees, or bridge beams upon which concrete will be cast later.

(2) Water spray curing or other moist curing methods may be used subject to the approval of the Engineer.

(3) The period of concrete curing shall be determined by the results of the compressive strength test on cylinders made during the progress of the

work and cured to closely approximate the concrete strength of the product it represents.

(4) Side forms may be removed 12 hours after placing the concrete, provided curing is continued with one of the approved Department curing procedures.

b. Steam or radiant heat will be allowed for accelerated curing provided the following procedure is adhered to:

(1) Curing chambers shall be reasonably free of leakage and shall have a minimum clearance of 3 inches (75 mm) in order to insure adequate circulation of heat. The relative humidity within the curing enclosure shall be maintained between 70 and 100 percent.

(2) Temperature:

(i) One approved continuous recording thermometer for each 115 feet (35 m) of casting bed, with a minimum of 2 continuous recording thermometers, shall be located in each enclosure or curing chamber.
(ii) Continuous temperature record charts for each casting shall be available to the Engineer for examination and approval at any time.
(iii) If the temperature records or other temperature readings taken by the Engineer indicate that manual control of heat is producing temperature changes in excess of those specified, the Engineer may reject the Precast or Precast/Prestress Structural Unit.
(iv) Temperature of the curing concrete shall be 50°F to 105°F (10°C to 40°C) and shall be maintained near placement temperature until the concrete has reached initial set as determined by ASTM C 403 "Time of Setting of Concrete Mixture by Penetration Resistance". These temperature restrictions apply when heat is supplied to the curing enclosure prior to initial set.
(v) The temperature rate of rise shall not exceed 60°F (15.5°C) per hour.

(3) The concrete shall be completely enclosed with a waterproof curing chamber during accelerated curing periods.

(4) Steam jets shall not be directed at the concrete or the steel forms.

(5) If the temperature of the concrete rises above 175°F (79°C), the concrete shall be rejected.

(6) The temperature in the concrete shall be maintained so that at any given time the difference between the highest and lowest temperature station readings will not be more than 30°F (-1°C). If the temperature varies more than 30°F (16°C), the product shall be rejected.

(7) Eight hours after placing the concrete, individual sections may be uncovered to remove their forms. The curing may be discontinued during this operation. The section shall not be left uncovered longer than necessary and never longer than 30 minutes. Waterproofed covers shall be used to recover the product.

(8) After the heat source has been turned off, the curing cover shall be maintained in place during the curing period until the release strength has been reached.

(9) Detensioning shall be accomplished before the temperatures of the units drop more than 60°F from the peak cure strength temperature and while they are still moist.

(10) Master slave heat curing system may be used for curing quality control cylinders.

c. After detensioning, prestressed concrete girders shall be inspected for cracking. If any cracks are discovered between quarter points in the middle of the girder on the bottom flange face, the girder shall be rejected.

9. Defects and Repair Procedures:

a. After the forms are removed, stone pockets, honeycombs, or other defects may be exposed. The Engineer shall determine if these defects affect the item's structural integrity and whether the item will be rejected.

b. Precast or Precast/Prestressed Concrete Structural Units which have chipped, spalled, honeycombed, or otherwise defective areas which are not considered detrimental to the structural integrity may be used after being repaired by the Grooming and Repair Procedures for Precast Concrete Products in the NDR Materials Sampling Guide.

10. Surface Finish:

a. On structures serving as highway grade separations, the following shall apply:

(1) The exterior face of all exterior girders or beams plus the bottoms and chamfers on all lower flanges shall be given the following finish:

(i) All uneven form joints in excess of 1/8 inch (3 mm) shall be ground smooth.
(ii) The surface shall be steel brushed to remove scale, laitance, and to open partially obstructed holes.
(iii) The surface shall be dampened.
(iv) Grout shall be applied to the surface.
(v) The grout shall consist of 1.5 parts of fine sand, 1 part of Portland cement, and sufficient water to produce a consistency of thick paint. The cement used in the grout shall be a blend of regular Type I and white Portland cement to duplicate the lighter appearance of the steam cured units.

(vi) If necessary, an admixture which will not discolor the concrete may be used in the grout to reduce shrinkage if approved by the Engineer. Admixtures containing iron particles shall not be used.

(vii) The surface shall be float finished with a cork or other suitable float. This operation shall completely fill all holes and depressions on the surface.

(viii) When the grout is of such plasticity that it will not be pulled from holes or depressions, sponge rubber or burlap shall be used to remove all excess grout.

(ix) Surface finishing during cold weather shall not be performed unless the temperature is 40°F (4°C) and rising. The surface shall be protected against temperature drops below 40°F (4°C) for a period of 12 hours after finishing.

(x) A uniform appearance will be required. In the event the appearance produced by the above procedure is not uniform, both in texture and coloration, the Precast or Precast/Prestress Structural Unit will be rejected. The Contractor may request other methods approved by the Engineer to create a uniform appearance.

11. Grouting for Post-Tensioned Units:

a. The Contractor shall install steel in flexible or other approved tubes which shall be cast in the concrete and shall be pressure-grouted after the post-tensioning process has been completed.

b. Bonding grout shall be made to the consistency of thick paint and shall be mixed in the proportions as follows: Portland cement (Type I), 100 pounds (45 kg); fly ash (ASTM C 618), 34 pounds (15 kg); water, 45 to 62 pounds (20 to 28 kg) (adjust at site); and nonshrink admixture approved by the PCC Engineer.

c. The final grouting pressure shall be at least 80 psi (550 kPa).

d. The Contractor shall make provisions to demonstrate to the Engineer that grouting material has completely filled all areas within the conduit.

12. Handling, Transporting, and Storing:

a. (1) Prestressed Concrete Structural Units must be at least 9 days old before they can be set on the bridge substructure. Surveying for shim shots, forming the bridge deck or diaphragms and placing construction material on the girder is not allowed until the girders have attained the minimum age and design strength specified in the plans.

(2) The Contractor shall be responsible for exercising extreme care in lifting, handling, storing and transporting the Prestressed Concrete Structural Units to prevent cracking or damage. Prestressed concrete bridge girders shall be maintained in an upright position and supported within 18 inches of the ends at all times. When supported at the proper positions, no part of the units shall be allowed to rest on the ground. Prestressed concrete bridge girders shall be set on a level area to

prevent field bowing and adequate supports shall be placed under their bearing devices to prevent settlement into the ground. Proper support bearings shall be used to avoid twisting of the prestressed concrete bridge girders. Prestressed Concrete Structural Units shall be lifted by devices designed by the Contractor.

(3) The Contractor must provide any temporary intermediate diaphragms and/or bracing necessary to provide lateral and torsional stability for the girders during construction of the concrete slab. The temporary intermediate diaphragms/bracing shall be removed after the concrete has attained its design strength. The cost of furnishing, installing and removing the temporary intermediate diaphragms and/or bracing shall be subsidiary to the pay item “Class 47BD-4000 Concrete for Bridges”.

(4) (i) The girders shall be transported in an upright position and the points of support and direction of the reactions with respect to the girder shall be approximately the same during the transportation and storage as when the girder is in its final position. If the Contractor finds it necessary to transport the precast girders in some other position, the Contractor shall be prepared to prove that no internal damage results.

(ii) Adequate padding shall be provided between tie chains and cables to prevent chipping of the concrete.

(iii) Live loads shall not be allowed on the superstructure units until the floor slab is placed and attains the design strength shown in the plans.

13. Inspection Facilities:

The Contractor shall arrange with the producer of Precast or Precast/Prestressed Concrete Structural Units to provide an office, laboratory and bathroom for the Department's inspector. The areas shall meet the following requirements:

a. Thermostatically controlled heating and air conditioning shall be provided so that temperature can be maintained between 68° and 77°F (20° and 25°C).

b. The floors shall be tile or a similar floor covering.

c. Interior and exterior walls shall be well maintained and painted.

d. All exterior doors shall have cylinder locks, and all keys shall be turned over to the Engineer.

e. Ceiling lighting shall provide a minimum of 465 foot-candles (5000 lx) of light on all working surfaces.

f. Electrical outlets shall be spaced no more than 6 feet (1.8 m) apart with no less than 1 outlet on any wall of the office or lab.

g. A single trunk telephone and a means to the Internet with a minimum of 1.5 mb of download stream shall be installed in the office, and the installation charges shall be paid by the Contractor. The monthly service charges will be paid by the Department.

h. A fire extinguisher and First-Aid kit shall be provided.

i. A ventilated bathroom with a toilet and sink shall be provided in the structure. A fresh water supply and drain will be required in the lab area.

j. The lab, office, and bathroom shall be separate rooms with interconnecting doors.

k. The minimum lab area is 230 square feet (21 m^2).

l. The minimum toilet area is 20 square feet (2 m^2).

m. The minimum office area is 160 square feet (15 m^2).

n. The Contractor shall clean and maintain the rooms and shall supply all heating fuel, electricity, and water.

o. The Contractor shall also supply for the sole use of the inspectors all desks, work tables, chairs, files, lockers, and sanitary supplies necessary and commensurate with the inspection of his/her plant. It is anticipated that the following minimum amount of office and lab equipment will be required: One desk with approximately 3 foot x 6 foot (0.9 m x 1.8 m) top; one upright locker or wardrobe, with shelves, approximately 5 feet (1.5 m) deep; two 4-drawer file cabinets; 1 chair per inspector; 10 square feet (1 m^2) of work surface per inspector in the office area; and a lab counter (approximately 3 x 18 feet [0.9 m x 5.5 m]) with storage space beneath.

Method of Measurement

1. Precast or Precast/Prestressed Concrete piles shall be measured in accordance with the requirements of Section 703.

2. Precast or Precast/Prestressed Concrete superstructures will be measured for payment by the lump sum.

Basis of Payment

1. Prestressed and/or Precast Concrete piles shall be measured and paid for as prescribed in Section 703.

2.

Pay Item	**Pay Unit**
Precast/Prestressed Concrete _____ Superstructure at Station _____*	Lump Sum (LS)

* Reinforcing steel, prestressing tendons, and all other components of the Precast or Precast/Prestressed Concrete superstructure are subsidiary to this pay item.

3. The cost of furnishing and maintaining the inspection facilities will not be paid for directly, but shall be subsidiary to "Precast/Prestressed Concrete _____ Superstructure at Station _____".

4. If a Precast or Precast/Prestressed Structural item's 56-day compressive strength is less than the design strength, then the Engineer will determine if the item can be used. If the item is to be used, a payment deduction of 25% will be taken if the 56-day compressive strength is less than 95 percent of the design strength.

5. All equipment calibrations and tests are subsidiary to "Precast/Prestressed Concrete _____ Superstructure at Station _____".

6. Payment is considered full compensation for all work prescribed in this Section, including the cost of prestressing and precasting.

5.G15 - Debonding Prestressing Strands

DEBONDING PRESTRESSING STRANDS

General

Where shown, debond prestressing strands by encasing the strands in plastic sheathing along the entire length shown and sealing the ends of the sheathing with waterproof tape.

Materials

Sheathing must:

1. Be split or un-split flexible polymer plastic tubing
2. Have a minimum wall thickness of 0.025 inch
3. Have an inside diameter exceeding the maximum outside diameter of the strand by 0.025 to 0.14 inch
4. Not react with the concrete or steel

Split sheathing must have a minimum overlap of 3/8 inch

Waterproofing tape must be flexible adhesive tape.

Construction

Distribute the debonded strands symmetrically about the vertical centerline of the girder.The debonded lengths of pairs of strands must be equal. Do not terminate debonding at any one cross section of the member for more than 40 percent of the debonded strands or 4 strands, whichever is greater.
Do not debond the outside strands.
Thoroughly seal the ends of the sheathing encasing the strand with waterproof tape before placing the concrete to prevent the intrusion of water or cement paste.
Do not debond the extended strands.

Payment

Full compensation for debonding prestressing strands shall be considered as included in the contract price paid for the Pay Item “Precast-Prestressed Concrete Superstructure at Sta.”, and no separate payment will be made therefor.

5.G16 – Expansion Bearings, PTFE Type

Section 712 in the Standard Specifications is amended to provide that all references to Expansion Bearings, TFE Type shall be considered as Expansion Bearings, PTFE Type.

Paragraph 2.a. of Subsection 712.02 is void and superseded by the following:

2. Expansion Bearings, PTFE Type:

a. (1) The upper assembly shall consist of a sole plate conforming to the requirements of ASTM A709/A709M grade 50W (345W) weathering steel with an ASTM A240/A240M Type 304 stainless steel plate (13 gage) attached to the lower surface. As an alternate, the sole plate may be grade 36 (250) steel, metallized. If the grade 36 alternate is used, all flame cut edges of the sole plate shall be ground to reduce hardness and facilitate blast cleaning. All corners of the sole plate shall be rounded to a 1/16 inch (1.5 mm) radius. All exposed plain steel surfaces shall be blast cleaned to a near white finish and zinc metallized with a minimum thickness of 8 mils (200 mm). Zinc metallizing must be performed in accordance with the American Welding Specification AWS C2.2.

Paragraph 2.b.(4) of Subsection 712.02 is void and superseded by the following: The PTFE sheet shall conform to the requirements of the AASHTO LRFD Bridge Design Specifications and the Standard Specifications.

5.G17 – Bridge Joint Nosing

Description

This work shall include sawing, removals (including existing angle irons), forming, and placing of the bridge joint nosing materials required at the expansion joint locations, as specified in the plans. This provision applies to:

- New construction, such as when a new approach slab is being constructed
- Breaking out concrete bridge deck or approaches and building new expansion joint seat
- Saw cutting existing concrete to allow installation of a new expansion joint
- Repairing broken edges of expansion joint gaps such as with nosing material
- Asphalt overlays on bridge decks and approaches

Material Requirements

Products for repair of expansion joint seats or gap edges or used to enhance the durability of gap edges are known as nosing materials. Such materials are given on the Approved Products List as “Bridge Joint Nosing Materials”. Products not shown on the Approved Products List may be used as allowed by Materials and Research Division.

Equipment

Appropriate equipment, in good working order shall be employed to ensure proper mixing and timely application of nosing materials.

Construction Methods

Construction of expansion joint seats shall be done as shown in the plans and compliant with all applicable Special Provisions.

All faces of the joint gap or seat shall be laid out in a straight line (shall not deviate from a straight line by more than ¼ inch at any point). This rule is applicable to whatever method is used to construct the gap, whether it is saw cutting, concrete forming, placing nosing material, etc.

Nosing materials shall be used as prescribed by the manufacturer. In addition, or to augment the manufacturer’s instructions as to preparation, all concrete surfaces against which repair or reconstruction material is to be placed, shall be thoroughly cleaned and free of all dust, laitance, moisture or any substances that may interfere with proper adhesion of the material to the concrete. Concrete against which nosing materials are applied shall have been cured for a period as specified by the nosing manufacturer.

Method of Measurement

The quantity of nosing for which payment will be made shall be computed by the Department in cubic feet from dimensions shown in the plans. No field measurement is required unless actual geometry deviates substantially from what is shown in the plans. No deduction shall be made for the amount of material displaced by reinforcement.

Basis of Payment

The Bridge Joint Nosing shall be paid by the cubic foot of the nosing installed and accepted by the Engineer. Preparation of the joint, including sawing, removals, sandblasting and forming will not be paid for directly but shall be considered subsidiary to the Bridge Joint Nosing.

Pay Item	Pay Unit
Bridge Joint Nosing	Cubic Feet (CF)

Section 6
Bridge Base Sheets

GENERAL BRIDGE

Cover Sheet (Samples):

Prestressed Concrete “I” Girder	v8i_title	6.3
Prestressed Concrete “IT” Girder	v8i_title	6.4
Welded Plate Girder	v8i_title	6.5
Rolled Beam Girder	v8i_title	6.6
Concrete Slab Bridge	v8i_title	6.7

Bill of Bars:

Phased….	v8i_bill_bar	6.8
Not phased	v8i_bill_bar	6.9
Phased with bending diagram	v8i_bill_bar	6.10
Not phased with bending diagram	v8i_bill_bar	6.11

Approach Slabs:

No skew, conc. rail, conc. pave., strip seal	v8i_app_slab	6.12
LHB, conc. rail, asph. pave., 1” preformed joint	v8i_app_slab	6.13
RHB, conc. rail., conc. pave, 2” preformed expansion joint	v8i_app_slab	6.14

Concrete Slope Protection:

Details	v8i_slope_pro	6.15
Elevation View	v8i_slope_pro	6.16

SUPERSTRUCTURE

Slab Bridge:

Bridge X-Section, > 30° skew	v8i_slab_bridge	6.17
Zero Skew, 90’ - 140’	v8i_slab_bridge	6.18
≤ 30° & LHB Skew, 90’ - 140’	v8i_slab_bridge	6.19
≤ 30° & RHB Skew, 40’ - 90’	v8i_slab_bridge	6.20
> 30° & LHB Skew, 40’ - 90’	v8i_slab_bridge	6.21
> 30° & RHB Skew, 40’ - 90’	v8i_slab_bridge	6.22

Floor Drain:

Galvanized, Standard	v8i_floor_drain	6.23

Lighting:

32” Concrete Barrier	v8i_lighting	6.24
42” Concrete Barrier	v8i_lighting	6.25
Concrete Median Barrier	v8i_lighting	6.26
34” NU Rail	v8i_lighting	6.27
42” NU Rail	v8i_lighting	6.28
42” NU Median Rail	v8i_lighting	6.29
Notes	v8i_lighting	6.30

Pot Bearings:

No skew, no beveled sole plate	v8i_pot_bearing	6.31
Skewed girder, beveled sole plate	v8i_pot_bearing	6.32

SUBSTRUCTURE

Concrete Pile:

Type I	v8i_conc_pile	6.33

GIRDERS

Prestressed I Shaped Girders:

NU 900, straight strand, 0 skew	v8i_nu_pre_girder	6.34
NU 1100, deflected strand, LHB skew	v8i_nu_pre_girder	6.35
NU 1350, debonded strand, RHB skew	v8i_nu_pre_girder	6.36
NU 1600, debonded strand, 0 skew	v8i_nu_pre_girder	6.37
NU 1800, deflected strand, 0 skew	v8i_nu_pre_girder	6.38
NU 2000, deflected strand, 0 skew, intermediate diaphragms	v8i_nu_pre_girder	6.39

Inverted Tee Girders:

IT 300	v8i_inv_tee	6.40
IT 400	v8i_inv_tee	6.41
IT 500	v8i_inv_tee	6.42
IT 600	v8i_inv_tee	6.43
IT 700	v8i_inv_tee	6.44
IT 800	v8i_inv_tee	6.45
IT 900	v8i_inv_tee	6.46

Post-Tensioned I Shaped Girders:

NU 1350P, Girder details, 0 ° skew, 2 P/T ducts	v8i_nu_post_girder	6.47
NU 1350P, Post-Tensioning Details, simple span, 2 P/T ducts	v8i_nu_post_girder	6.48
NU 1350P, Reinf. Details, 0 ° skew, simple span, 2 P/T ducts	v8i_nu_post_girder	6.49

BARRIERS/RAILS/FENCES

Concrete Barrier 2'-8", on slab, with lighting	v8i_conc_barrier	6.50
Concrete Barrier 3'-6", on deck, with block out	v8i_conc_barrier	6.51
Open Concrete Rail on Bridge Approach, on slab	v8i_conc_rail	6.52
Open Concrete Rail on Bridge Deck, on slab	v8i_conc_rail	6.53
Closed Concrete Rail on Bridge Approach, on deck, with block out	v8i_conc_rail	6.54
Closed Concrete Rail on Bridge Deck, on deck, with lighting	v8i_conc_rail	6.55
Partial Closed Concrete Rail on Bridge Deck, on deck, with lighting	v8i_conc_rail	6.56
2'-10" Open Concrete Rail on Approach, on slab	v8i_nu_rail	6.57
2'-10" Open Concrete Rail on Bridge Deck, on slab	v8i_nu_rail	6.58
2'-10" Closed Rail on Approach/Open Rail on Deck, on slab	v8i_nu_rail	6.59
2'-10" Closed Concrete Rail, on inverted tee	v8i_nu_rail	6.60
3'-6" Open Concrete Rail on Approach, deck, with lighting	v8i_nu_rail	6.61
3'-6" Open Concrete Rail on Bridge Deck, deck, with lighting	v8i_nu_rail	6.62
3'-6" Closed Rail on Approach/Open Rail on Bridge Deck, on deck	v8i_nu_rail	6.63
3'-6" Closed Concrete Rail, on deck, with lighting	v8i_nu_rail	6.64
Median Barrier for 3'-6" Rail	v8i_nu_rail	6.65
Transitioning Closed Concrete Rail	v8i_nu_trans_rail	6.66
Pedestrian Railing (Chain Link Type), 32" conc. barrier, galvanized	v8i_chain_link	6.67
Pedestrian Barrier on 29" Concrete Rail	v8i_ped_rail	6.68
Pedestrian Barrier on 32" Concrete Barrier	v8i_ped_rail	6.69
Pedestrian Barrier on 34" Concrete Rail	v8i_ped_rail	6.70
UPRR – Modified Closed Concrete Rail on Bridge Deck w/ lighting	v8i_uprr	6.71
UPRR – 6'-0" Pedestrian Barrier (Chain Link), galvanized	v8i_uprr	6.72
Pedestrian Barrier on Concrete Rail	v8i_uprr	6.73
RR – Railroad requirements	v8i_railroad	6.74
Details for RR Fence Attachment to Concrete Rail	v8i_rail_fence	6.75

- PRESTRESSED CONCRETE "I" GIRDER -

- NOTES -

This structure is designed in accordance with the AASHTO LRFD Bridge Design Specifications, Seventh Edition, including subsequent interim revisions.

The Contractor may substitute any one of the alternate designs shown on the plans for the original design. All quantities are based on the original design and no additions or deductions will be allowed for the use of an alternate design.

The prestressed girders have been designed assuming 100% continuity at the interior supports for live load.

The concrete bridge deck is designed by the empirical design method.

The girders and substructure are designed for a future wearing surface of 20 psf.

The superstructure is designed for the allowance of stay-in-place forms (5 lb/ft ^{2}) between girders.

Prestressed concrete girders must be at least 9 days old before they can be set on the Bridge substructure. Surveying for shim shots, forming the bridge deck, turndowns, diaphragms, and placing construction material on the girders is not allowed until the girders have reached design strength and are at least 30 days old. The shim shots may be taken before or after the turndowns and diaphragms are poured. All girder lines and spans, between expansion joints, shall be set before the shims are calculated. Shim shots are valid for 60 days. If the deck is not placed within 60 days, shim shots must be retaken, shims may be adjusted, and all costs shall be subsidiary to the Pay Item "CLASS 47BD-4000 CONCRETE FOR BRIDGE".

The Contractor must provide any temporary intermediate diaphragms and/or bracing necessary to provide lateral and torsional stability for the girders during construction of the concrete slab. The temporary intermediate diaphragms/bracing shall be removed after the concrete slab has attained 75% of its design strength. The cost for furnishing, installing, and removing the temporary intermediate diaphragms and/or bracing shall be subsidiary to the Pay Item, "CLASS 47BD-4000 CONCRETE FOR BRIDGE".

Concrete for slab, approach slabs, diaphragms, turndowns, and rails shall be Class "47BD", with a 28-day strength of 4,000 psi.

All other cast-in-place concrete shall be Class "47B" concrete, with a 28-day strength of 3,000 psi.

All reinforcing steel shall be epoxy coated and conform to the requirements of ASTM A615/A615M, Grade 60 steel.

The minimum clearance, measured from the face of the concrete to the surface of any reinforcing bar shall be 3", except where otherwise noted.

All structural steel shall conform to the requirements of ASTM A709/A709M, Grade 36.

Structural steel for all "H" piles shall conform to ASTM A709/A709M, Grade 36.

All dimensions shown are in horizontal plane only. No allowances have been made for vertical curve or roadway cross slope.

All plastic pipe, galvanized wire screen, and miscellaneous drainage items at the abutments shall be considered subsidiary to the Pay Item "SUBSURFACE DRAINAGE MATTING".

Girder shims that will be provided to the Contractor account for the dead load deflection due to weight of the slab, rail or barrier, and median (if present) only. The Contractor is responsible for making the necessary adjustments for the particular forming system used to achieve the slab grades and elevations shown on the plans.

When closure pours are required, the bridge finishing machine shall be entirely supported by the Phase II girders for the Phase II slab placement.

Unless noted as "Optional" all construction joints shown are mandatory.

The existing structure was built under project , dated . Plans are available from the Bridge Division upon request.

- QUANTITIES -

ABUTMENT NO. 1 EXCAVATION		1 LS
PIER NO. 1 EXCAVATION		1 LS
ABUTMENT NO. 2 EXCAVATION		1 LS
CLASS 47B-3000 CONCRETE FOR BRIDGE		CY
ABUTMENTS	CY	
PIERS	CY	
CLASS 47BD-4000 CONCRETE FOR BRIDGE		CY
SLAB	CY	
HAUNCHES	CY	
CONCRETE RAILS	CY	
PRECAST/PRESTRESSED CONCRETE SUPERSTRUCTURE AT STATION +		1 LS
GIRDERS	CY	
EPOXY COATED REINFORCING STEEL		LB
SLAB	LB	
CONCRETE RAILS	LB	
ABUTMENTS	LB	
PIERS	LB	
STEEL DIAPHRAGM		EA
HP 12 INCH X 53 LB STEEL PILING		LF
EXPANSION BEARING, TFE TYPE		EA
FIXED BEARING		EA
GRANULAR BACKFILL		CY
SUBSURFACE DRAINAGE MATTING		SY
CONCRETE FOR PAVEMENT APPROACHES CLASS 47BD-4000		CY
SLABS	CY	
CONCRETE RAILS	CY	
EPOXY COATED REINFORCING STEEL FOR PAVEMENT APPROACHES		LB
SLABS	LB	
CONCRETE RAILS	LB	
PREFORMED EXPANSION JOINT, TYPE A		LF
6' PEDESTRIAN RAILING (CHAIN LINK TYPE)		LF
BRIDGE DECK GROOVING		SY
BRIDGE JOINT NOSING		CF
CONCRETE SLOPE PROTECTION		SY

- INDEX -

GENERAL NOTES, QUANTITIES, & INDEX 1
GENERAL PLAN & ELEVATION 2
COORDINATES 3
GEOLOGICAL PROFILE & PILE LAYOUT 4
PILE DATA & SHEET PILE LAYOUT 5
PLAN & ELEVATION OF ABUTMENT 6
ABUTMENT DETAILS & BILL OF BARS 7
PLAN & ELEVATION OF PIER 8
PIER DETAILS & BILL OF BARS 9
GIRDER LAYOUT 10
GIRDER DATA 11
CROSS SECTION OF ROADWAY 12
CONCRETE RAIL ON BRIDGE 13
SLAB DETAILS & BILL OF BARS 14
APPROACH SLAB 15
RAIL ON APPROACH SLAB 16
BILL OF BARS - APPROACH SLAB 17

Shop plans for record
- Stay-In-Place forms

Shop plans for review
- Bearing Devices
- Prestressed Concrete Superstructure
- Superstructure Steel (Diaphragms/Separators/Etc.)
- Pedestrian Railing (Chain Link Type)

PROJECT NUMBER | SHEET NO.

C.N.
STRUCTURE NUMBER

PROFESSIONAL CIVIL ENGINEER MARK J. THAYNOWICZ E-8119 STATE OF NEBRASKA

BRIDGE ENGINEER

GENERAL NOTES, QUANTITIES, & INDEX - 2 SPAN OVERPASS

LOCATION
SKEW
ROADWAY
DESIGN LIVE LOAD

DATE
CHECKED BY
DETAILED BY
DESIGNED BY

STATE OF NEBRASKA - DEPARTMENT OF ROADS - BRIDGE DIVISION

COUNTY
RWY. NO.
REF. POST.
STA.

NDOR Nebraska Department of Roads

SPECIAL PLAN NO.

FILE: 2013 BSPP - Base Sheets-Chapter 3&6.DGN Date: 2014 07:57 User: dcr2081 Computer: DRER1D0619

- PRESTRESSED CONCRETE "IT" GIRDER -

- NOTES -

This structure is designed in accordance with the AASHTO LRFD Bridge Design Specifications, Seventh Edition, including subsequent interim revisions.

The Contractor may substitute any one of the alternate designs shown on the plans for the original design. All quantities are based on the original design and no additions or deductions will be allowed for the use of an alternate design.

The prestressed girders have been designed assuming 100% continuity at the interior supports for live load.

The girders and substructure are designed for a future wearing surface of 20 psf.

The superstructure is designed for the allowance of stay-in-place forms (5 lb./ft ^{2}) between girders.

Prestressed concrete girders must be at least 9 days old before they can be set on the Bridge substructure. Surveying for shim shots, forming the bridge deck, turndowns, diaphragms, and placing construction material on the girders is not allowed until the girders have reached design strength and are at least 30 days old. The shim shots may be taken before or after the turndowns and diaphragms are poured. All girder lines and spans, between expansion joints, shall be set before the shims are calculated. Shim shots are valid for 60 days. If the deck is not placed within 60 days, shim shots must be retaken, shims may be adjusted, and all costs shall be subsidiary to the Pay Item "CLASS 47BD-4000 CONCRETE FOR BRIDGE".

The Contractor must provide any temporary intermediate diaphragms and/or bracing necessary to provide lateral and torsional stability for the girders during construction of the concrete slab. The temporary intermediate diaphragms/bracing shall be removed after the concrete slab has attained 75% of its design strength. The cost for furnishing, installing, and removing the temporary intermediate diaphragms and/or bracing shall be subsidiary to the Pay Item, "CLASS 47BD-4000 CONCRETE FOR BRIDGE".

Concrete for slab, approach slabs, diaphragms, turndowns, and rails shall be Class "47BD", with a 28-day strength of 4,000 psi.

All other cast-in-place concrete shall be Class "47B" concrete, with a 28-day strength of 3,000 psi.

All reinforcing steel shall be epoxy coated and conform to the requirements of ASTM A615/A615M, Grade 60 steel.

The minimum clearance, measured from the face of the concrete to the surface of any reinforcing bar shall be 3", except where otherwise noted.

All structural steel shall conform to the requirements of ASTM A709/A709M, Grade 36.

Structural steel for all "H" piles shall conform to ASTM A709/A709M, Grade 36.

The Pay Item, "STRUCTURAL STEEL FOR SUBSTRUCTURE", shall include the tie rods and nose angles at the bents.

All dimensions shown are in horizontal plane only. No allowances have been made for vertical curve or roadway cross slope.

All plastic pipe, galvanized wire screen, and miscellaneous drainage items at the abutments shall be considered subsidiary to the Pay Item "SUBSURFACE DRAINAGE MATTING".

Girder shims that will be provided to the Contractor account for the dead load deflection due to weight of the slab, rail or barrier, and median (if present) only. The Contractor is responsible for making the necessary adjustments for the particular forming system used to achieve the slab grades and elevations shown on the plans.

Unless noted as "Optional" all construction joints shown are mandatory.

The Pay Item, "EXCAVATION (ESTABLISHED QUANTITY)", shall include the channel excavation/fill through the bridge as shown on the plans.

- QUANTITIES -

ABUTMENT NO. 1 EXCAVATION		1 LS
BENT NO. 1 EXCAVATION		1 LS
BENT NO. 2 EXCAVATION		1 LS
ABUTMENT NO. 2 EXCAVATION		1 LS
CLASS 47B-3000 CONCRETE FOR BRIDGE		CY
ABUTMENTS	CY	
BENTS	CY	
CLASS 47BD-4000 CONCRETE FOR BRIDGE		CY
SLAB	CY	
HAUNCHES	CY	
CONCRETE RAILS	CY	
PRECAST/PRESTRESSED CONCRETE SUPERSTRUCTURE AT STATION +		1 LS
GIRDERS	CY	
EPOXY COATED REINFORCING STEEL		LB
SLAB	LB	
CONCRETE RAILS	LB	
ABUTMENTS	LB	
BENTS	LB	
STRUCTURAL STEEL FOR SUBSTRUCTURE		LB
STEEL SHEET PILING		SF
HP 12 INCH X 53 LB STEEL PILING		LF
GRANULAR BACKFILL		CY
SUBSURFACE DRAINAGE MATTING		SY
BROKEN CONCRETE RIPRAP		TON
RIPRAP FILTER FABRIC		SY
CONCRETE FOR PAVEMENT APPROACHES CLASS 47BD-4000		CY
SLABS	CY	
CONCRETE RAILS	CY	
EPOXY COATED REINFORCING STEEL FOR PAVEMENT APPROACHES		LB
SLABS	LB	
CONCRETE RAILS	LB	
PREFORMED EXPANSION JOINT, TYPE B		LF
EXCAVATION (ESTABLISHED QUANTITY)		CY
BRIDGE DECK GROOVING		SY
BRIDGE JOINT NOSING		CF

- INDEX -

GENERAL NOTES, QUANTITIES, & INDEX 1
GENERAL PLAN & ELEVATION 2
COORDINATES 3
GEOLOGICAL PROFILE & PILE LAYOUT 4
PILE DATA & SHEET PILE LAYOUT 5
PLAN & ELEVATION OF ABUTMENT 6
ABUTMENT DETAILS & BILL OF BARS 7
PLAN & ELEVATION OF BENT 8
BENT DETAILS & BILL OF BARS 9
GIRDER LAYOUT 10
GIRDER DATA 11
CROSS SECTION OF ROADWAY 12
CONCRETE RAIL ON BRIDGE 13
SLAB DETAILS & BILL OF BARS 14
APPROACH SLAB 15
RAIL ON APPROACH SLAB 16
BILL OF BARS - APPROACH SLAB 17

Shop plans for record
Stay-In-Place forms

Shop plans for review
Steel Sheet Piling
Prestressed Concrete Superstructure
Superstructure Steel (Diaphragms/Separators/Etc.)
Substructure Steel (Armor Angles/Tie Rods/Etc.)

PROJECT NUMBER | SHEET NO.

C.N.
STRUCTURE NUMBER

PROFESSIONAL CIVIL ENGINEER MARK J. THAYNORICZ E-8119 STATE OF NEBRASKA

BRIDGE ENGINEER

GENERAL NOTES, QUANTITIES & INDEX - 3 SPAN STREAM

LOCATION
SKEW
ROADWAY
DESIGN LIVE LOAD

DATE
CHECKED BY
DETAILED BY
DESIGNED BY

COUNTY
HWY. NO.
REF. POST.
STA.

STATE OF NEBRASKA - DEPARTMENT OF ROADS - BRIDGE DIVISION

NDOR Nebraska Department of Roads

SPECIAL PLAN NO.

File: 2013 BSPP - Base Sheets-Chapter 3.dgn Date: 2/6/2014 07:57 User: dcr2081 Computer: DRSRIDGE19

- WELDED PLATE GIRDER -

- NOTES -

This structure is designed in accordance with the AASHTO LRFD Bridge Design Specifications, Seventh Edition, including subsequent interim revisions.

The Contractor may substitute any one of the alternate designs shown on the plans for the original design. All quantities are based on the original design and no additions or deductions will be allowed or deductions will be allowed for the use of an alternate design.

The concrete bridge deck is designed by the empirical design method.

The girders and substructure are designed for a future wearing surface of 20 psf.

The superstructure is designed for the allowance of stay-in-place forms (5 lb./ft^2) between girders.

All structural steel for girder flanges, webs, stiffeners, separators, and all splice materials shall conform to the requirements of ASTM A709/A709M, Grade 50W weathering steel.

All other structural steel shall conform to the requirements of ASTM A709/A709M, Grade 36.

Structural steel for all "H" piles shall conform to ASTM A709/A709M, Grade 36.

All fasteners shall be 7/8" Φ high strength bolts, ASTM A325.

Nuts, bolts, and washers used in the assembly of weathering steel shall be Type 3.

During girder fabrication, the final camber tolerance shall not exceed those in Table 3.3 of A.W.S. "S" is the length of girder between splices.

During girder fabrication, the flanges at the splice must line up within 1/8" of parallel to the adjacent flanges without applying external force, before the splice is drilled.

Field splices shall be clean and free of all foreign matter before field assembly. The plates shall be in full contact when the bolts are tightened to a snug-tight condition.

When assembling the girders, they shall be set according to the blocking diagram before any bolts are tightened to a snug-tight condition.

Butt splices will be permitted for flange plates exceeding 60 feet in length. The locations of the splice shall be shown on the shop plans and will be subject to approval by the Engineer.

The Contractor may eliminate any bolted field splice by extending the heavier of the beams so connected. The Contractor shall make all necessary adjustments in bearings and bearing seat elevations caused by these changes. These changes and a revised blocking diagram shall be shown on the shop plans and will be subject to approval by the Engineer. No change in the contract price or quantities will be made for this change.

The girders for this bridge are not designed to resist any torsional or lateral forces due to temporary construction loads. The Contractor must provide any temporary bracing necessary to support the girder web and flanges against all torsional or lateral forces resulting from construction loads.

Field tack welding of form hangers or miscellaneous hardware to any part of the steel girder, with the exception of the shear connectors, shall be prohibited.

All bearing stiffeners and girder ends, except at field splices, shall be vertical after final erection. All other stiffeners and all field splices shall be normal to the top flange.

Concrete for slab, approach slabs, turndowns, and rails shall be Class "47BD", with a 28-day strength of 4,000 psi.

All other cast-in-place concrete shall be Class "47B" concrete, with a 28-day strength of 3,000 psi.

All reinforcing steel shall be epoxy coated and conform to the requirements of ASTM A615/A615M, Grade 60 steel.

Girder shims that will be provided to the Contractor account for the dead load deflection due to weight of the slab, rail or barrier, and median (if present) only. The Contractor is responsible for making the necessary adjustments for the particular forming system used to achieve the slab grades and elevations shown on the plans.

The shim shots may be taken before or after the turndowns and diaphragms are poured.

All plastic pipe, galvanized wire screen, and miscellaneous drainage items at the abutments shall be considered subsidiary to the Pay Item "SUBSURFACE DRAINAGE MATTING".

All dimensions shown are in horizontal plane only. No allowances have been made for vertical curve or roadway cross slope.

The Pay Item, "EXCAVATION (ESTABLISHED QUANTITY)", shall include the channel excavation/fill through the bridge as shown on the plans.

Unless noted as "Optional" all construction joints shown are mandatory.

7/8" Φ x 0'-5" end welded studs have an in-place weight of 98.0 lb./100 studs.

Steel (weight) quantities are based upon 490 pcf and 1 lb. per bolt.

Where the entire slab is not expected to be placed in one day, the Contractor may submit an alternate proposed slab pouring sequence to the Bridge Division at the preconstruction conference so that the new camber and shims may be calculated.

- QUANTITIES -

ABUTMENT NO. 1 EXCAVATION		1 LS
PIER NO. 1 EXCAVATION		1 LS
ABUTMENT NO. 2 EXCAVATION		1 LS
CLASS 47B-3000 CONCRETE FOR BRIDGE		CY
ABUTMENTS	CY	
PIERS	CY	
CLASS 47BD-4000 CONCRETE FOR BRIDGE		CY
SLAB	CY	
HAUNCHES	CY	
CONCRETE RAILS	CY	
STEEL SUPERSTRUCTURE AT STA. +		1 LS
GIRDERS	LB	
SEPARATORS & MISC.	LB	
SHEAR CONNECTORS	LB	
BOLTS	LB	
TOTAL	LB	
EPOXY COATED REINFORCING STEEL		LB
SLAB	LB	
CONCRETE RAILS	LB	
ABUTMENTS	LB	
PIERS	LB	
STEEL SHEET PILING		SF
HP 12 INCH X 53 LB STEEL PILING		LF
EXPANSION BEARING, PTFE TYPE		EA
FIXED BEARING		EA
GRANULAR BACKFILL		CY
SUBSURFACE DRAINAGE MATTING		SY
CONCRETE FOR PAVEMENT APPROACHES CLASS 47BD-4000		CY
SLABS	CY	
CONCRETE RAILS	CY	
EPOXY COATED REINFORCING STEEL FOR PAVEMENT APPROACHES		LB
SLABS	LB	
CONCRETE RAILS	LB	
PREFORMED EXPANSION JOINT, TYPE A		LF
BRIDGE DECK GROOVING		SY
BRIDGE JOINT NOSING		CF
CONCRETE SLOPE PROTECTION		SY

- INDEX -

GENERAL NOTES, QUANTITIES, & INDEX 1
GENERAL PLAN & ELEVATION 2
COORDINATES 3
GEOLOGICAL PROFILE & PILE LAYOUT 4
PILE DATA & SHEET PILE LAYOUT 5
PLAN & ELEVATION OF ABUTMENT 6
ABUTMENT DETAILS & BILL OF BARS 7
PLAN & ELEVATION OF PIER 8
PIER DETAILS & BILL OF BARS 9
GIRDER LAYOUT & ELEVATION 10
FIELD SPLICE & STIFFENER DETAILS 11
CAMBER & BLOCKING DIAGRAM 12
CROSS SECTION OF ROADWAY 13
CONCRETE RAIL ON BRIDGE 14
ADDITIONAL SLAB DETAILS & BILL OF BARS 15
APPROACH SLAB 16
RAIL ON APPROACH SLAB 17
BILL OF BARS - APPROACH SLAB 18

Shop plans for record
Stay-In-Place forms

Shop plans for review
Steel Superstructure
Steel Sheet Piling
Bearing Devices

PROJECT NUMBER | SHEET NO.

C.N.
STRUCTURE NUMBER

PROFESSIONAL CIVIL ENGINEER
MARK J. THAYNOSKICZ
E-8119
STATE OF NEBRASKA

BRIDGE ENGINEER

GENERAL NOTES, QUANTITIES, & INDEX - 2 SPAN OVERPASS

LOCATION
SKEW
ROADWAY
DESIGN LIVE LOAD

DATE
CHECKED BY
DETAILED BY
DESIGNED BY

STATE OF NEBRASKA - DEPARTMENT OF ROADS - BRIDGE DIVISION

COUNTY
SWT. NO.
REF. POST.
STA.

NDOR Nebraska Department of Roads

SPECIAL PLAN NO.

File: 2013 BSPP - Base Sheets-Chapter 3.dgn Date: 2/6/2014 07:57 User: dcr2081 Computer: DRSR1DGE19

- ROLLED BEAM -

- NOTES -

This structure is designed in accordance with the AASHTO LRFD Bridge Design Specifications, Seventh Edition, including subsequent interim revisions.

The Contractor may substitute any one of the alternate designs shown on the plans for the original design. All quantities are based on the original design and no additions or deductions will be allowed for the use of an alternate design.

The concrete bridge deck is designed by the empirical design method.

The girders and substructure are designed for a future wearing surface of 20 psf.

The superstructure is designed for the allowance of stay-in-place forms (5 lb/ft ^{2}) between girders.

All structural steel for rolled beams, stiffeners, separators and all splice material shall conform to the requirements of ASTM A709/A709M, Grade 50W weathering steel.

All other structural steel shall conform to the requirements of ASTM A709/A709M, Grade 36.

All fasteners shall be 7/8" Φ high strength bolts, ASTM A325.

Nuts, bolts, and washers used in the assembly of weathering steel shall be Type 3.

The Pay Item, "STRUCTURAL STEEL FOR SUBSTRUCTURE", shall include the tie rods and nose angles at the bents.

District personnel and the Contractor shall inspect the existing bottom and top flange web welds to verify there is no damage to those welds. District personnel will contact the Bridge Division if any damage is noted.

All rolled beams and splice plates shall be considered main tension members for the purpose of Charpy-V-Notch tests.

During girder fabrication, the flanges at the splice must line up within 1/8" of parallel to the adjacent flanges without applying external force, before the splice is drilled.

Field splices shall be clean and free of all foreign matter before field assembly. The plates shall be in full contact when the bolts are tightened to a snug-tight condition.

The girders for this bridge are not designed to resist any torsional or lateral forces due to temporary construction loads. The Contractor must provide any temporary bracing necessary to support the girder web and flanges against all torsional or lateral forces resulting from construction loads.

Field tack welding of form hangers or miscellaneous hardware to any part of the steel girder, with the exception of the shear connectors, shall be prohibited.

All rolled beams shall be placed with mill camber upwards.

When assembling the girders, they shall be set according to the blocking diagram before any bolts are tightened to a snug-tight condition.

All bearing stiffeners and girder ends, except at field splices, shall be vertical after final erection. All other stiffeners and all field splices shall be normal to the top flange.

Concrete for slab, approach slabs, diaphragms, turndowns, and rails shall be Class "47BD", with a 28-day strength of 4,000 psi.

All other cast-in-place concrete shall be Class "47B" concrete, with a 28-day strength of 3,000 psi.

All reinforcing steel shall be epoxy coated and conform to the requirements of ASTM A615/A615M, Grade 60 steel.

The minimum clearance, measured from the face of the concrete to the surface of any reinforcing bar shall be 3", except where otherwise noted.

All plastic pipe, galvanized wire screen, and miscellaneous drainage items at the abutments shall be considered subsidiary to the Pay Item "SUBSURFACE DRAINAGE MATTING".

All dimensions shown are in horizontal plane only. No allowances have been made for vertical curve or roadway cross slope.

Girder shims that will be provided to the Contractor account for the dead load deflection due to weight of the slab, rail or barrier, and median (if present) only. The Contractor is responsible for making the necessary adjustments for the particular forming system used to achieve the slab grades and elevations shown on the plans.

The shim shots may be taken before or after the turndowns and diaphragms are poured.

When closure pours are required, the bridge finishing machine shall be entirely supported by the Phase II girders for the Phase II slab placement.

The Pay Item, "EXCAVATION (ESTABLISHED QUANTITY)", shall include the channel excavation/fill through the bridge as shown on the plans.

Unless noted as "Optional" all construction joints shown are mandatory.

7/8" Φ x 0'-5" end welded studs have an in-place weight of 98.0 lb /100 studs.

Steel (weight) quantities are based upon 490 pcf and 1 lb. per bolt.

The existing structure was built under project _____, dated _____. Plans are available from the Bridge Division upon request.

- QUANTITIES -

ABUTMENT NO. 1 EXCAVATION		1 LS
BENT NO. 1 EXCAVATION		1 LS
BENT NO. 2 EXCAVATION		1 LS
ABUTMENT NO. 2 EXCAVATION		1 LS
CLASS 47B-3000 CONCRETE FOR BRIDGE		CY
ABUTMENTS	CY	
BENTS	CY	
CLASS 47BD-4000 CONCRETE FOR BRIDGE		CY
SLAB	CY	
HAUNCHES	CY	
CONCRETE RAILS	CY	
STEEL SUPERSTRUCTURE AT STA. +		1 LS
GIRDERS	LB	
SEPARATORS & MISC.	LB	
SHEAR CONNECTORS	LB	
BOLTS	LB	
TOTAL	LB	
EPOXY COATED REINFORCING STEEL		LB
SLAB	LB	
CONCRETE RAILS	LB	
ABUTMENTS	LB	
BENTS	LB	
STRUCTURAL STEEL FOR SUBSTRUCTURE		LB
STEEL SHEET PILING		SF
PIPE PILING		LF
EXPANSION BEARING, PTFE TYPE		EA
FIXED BEARING		EA
GRANULAR BACKFILL		CY
SUBSURFACE DRAINAGE MATTING		SY
BROKEN CONCRETE RIPRAP		TON
RIPRAP FILTER FABRIC		SY
CONCRETE FOR PAVEMENT APPROACHES CLASS 47BD-4000		CY
SLABS	CY	
CONCRETE RAILS	CY	
EPOXY COATED REINFORCING STEEL FOR PAVEMENT APPROACHES		LB
SLABS	LB	
CONCRETE RAILS	LB	
PREFORMED EXPANSION JOINT, TYPE B		LF
EXCAVATION (ESTABLISHED QUANTITY)		CY
BRIDGE DECK GROOVING		SY
BRIDGE JOINT NOSING		CF

- INDEX -

GENERAL NOTES , QUANTITIES & INDEX	1
GENERAL PLAN & ELEVATION	2
COORDINATES	3
GEOLOGICAL PROFILE & PILE LAYOUT	4
PILE DATA & SHEET PILE LAYOUT	5
PLAN & ELEVATION OF ABUTMENT	6
ABUTMENT DETAILS & BILL OF BARS	7
PLAN & ELEVATION OF BENT	8
BENT DETAILS & BILL OF BARS	9
GIRDER LAYOUT & ELEVATION	10
FIELD SPLICE & STIFFENER DETAILS	11
CAMBER & BLOCKING DIAGRAM	12
CROSS SECTION OF ROADWAY	13
CONCRETE RAIL ON BRIDGE	14
SLAB DETAILS & BILL OF BARS	15
APPROACH SLAB	16
RAIL ON APPROACH SLAB	17
BILL OF BARS - APPROACH SLAB	18

Shop plans for record
- Stay-In-Place forms

Shop plans for review
- Steel Superstructure
- Substructure Steel (Armor Angles/Tie Rods/Etc.)
- Steel Sheet Piling
- Bearing Devices

PROJECT NUMBER | SHEET NO.

C.N.

STRUCTURE NUMBER

PROFESSIONAL CIVIL ENGINEER MARK J. THAYNOWICZ E-8119 STATE OF NEBRASKA

BRIDGE ENGINEER

GENERAL NOTES, QUANTITIES & INDEX - 3 SPAN STREAM

LOCATION
SKEW
ROADWAY
DESIGN LIVE LOAD

DATE

DETAILED BY | CHECKED BY

COUNTY
RWY. NO.
REF. POST.
STA.

DESIGNED BY

STATE OF NEBRASKA - DEPARTMENT OF ROADS - BRIDGE DIVISION

NDOR Nebraska Department of Roads

SPECIAL PLAN NO.

- CONCRETE SLAB BRIDGE -

- NOTES -

This structure is designed in accordance with the AASHTO LRFD Bridge Design Specifications, Seventh Edition, including subsequent interim revisions.

The Contractor may substitute any one of the alternate designs shown on the plans for the original design. All quantities are based on the original design and no additions or deductions will be allowed for the use of an alternate design.

Concrete for slab, approach slabs and rails shall be Class "47BD", with a 28-day strength of 4,000 psi.

All other cast-in-place concrete shall be Class "47B" concrete, with a 28-day strength of 3,000 psi.

All reinforcing steel shall be epoxy coated and conform to the requirements of ASTM A615/A615M, Grade 60 steel.

The minimum clearance, measured from the face of the concrete to the surface of any reinforcing bar shall be 3", except where otherwise noted.

All structural steel shall conform to the requirements of ASTM A709/A709M, Grade 36.

The Pay Item, "STRUCTURAL STEEL FOR SUBSTRUCTURE", shall include the tie rods and nose angles at the bents.

District personnel and the Contractor shall inspect the existing bottom and top flange web welds to verify there is no damage to those welds. District personnel will contact the Bridge Division if any damage is noted.

All dimensions shown are in horizontal plane only. No allowances have been made for vertical curve or roadway cross slope.

All plastic pipe, galvanized wire screen, and miscellaneous drainage items at the abutments shall be considered subsidiary to the Pay Item "SUBSURFACE DRAINAGE MATTING".

The Pay Item, "EXCAVATION (ESTABLISHED QUANTITY)", shall include the channel excavation/fill through the bridge as shown on the plans.

The existing structure was built under project _____, dated _____. Plans are available from the Bridge Division upon request.

- QUANTITIES -

ABUTMENT NO. 1 EXCAVATION		1 LS
BENT NO. 1 EXCAVATION		1 LS
BENT NO. 2 EXCAVATION		1 LS
ABUTMENT NO. 2 EXCAVATION		1 LS
CLASS 47B-3000 CONCRETE FOR BRIDGE		CY
ABUTMENTS	CY	
BENTS	CY	
CLASS 47BD-4000 CONCRETE FOR BRIDGE		CY
SLAB	CY	
CONCRETE RAILS	CY	
EPOXY COATED REINFORCING STEEL		LB
SLAB	LB	
CONCRETE RAILS	LB	
ABUTMENTS	LB	
BENTS	LB	
STRUCTURAL STEEL FOR SUBSTRUCTURE		LB
STEEL SHEET PILING		SF
CONCRETE PILING		LF
GRANULAR BACKFILL		CY
SUBSURFACE DRAINAGE MATTING		SY
BROKEN CONCRETE RIPRAP		TON
RIPRAP FILTER FABRIC		SY
CONCRETE FOR PAVEMENT APPROACHES CLASS 47BD-4000		CY
SLABS	CY	
CONCRETE RAILS	CY	
EPOXY COATED REINFORCING STEEL FOR PAVEMENT APPROACHES		LB
SLABS	LB	
CONCRETE RAILS	LB	
EXCAVATION (ESTABLISHED QUANTITY)		CY
BRIDGE SHORING		LS
BRIDGE DECK GROOVING		SY
BRIDGE JOINT NOSING		CF

- INDEX -

GENERAL NOTES, QUANTITIES, & INDEX 1
GENERAL PLAN & ELEVATION 2
COORDINATES 3
GEOLOGICAL PROFILE & PILE LAYOUT 4
PILE DATA & SHEET PILE LAYOUT 5
PLAN & ELEVATION OF ABUTMENT 6
ABUTMENT DETAILS & BILL OF BARS 7
PLAN & ELEVATION OF BENT 8
BENT DETAILS & BILL OF BARS 9
CROSS SECTION OF ROADWAY 10
CONCRETE RAIL ON BRIDGE 11
ADDITIONAL SLAB DETAILS & BILL OF BARS 12
APPROACH SLAB 13
RAIL ON APPROACH SLAB 14
BILL OF BARS - APPROACH SLAB 15

Shop plans for record
Bridge Shoring

Shop plans for review
Substructure Steel (Armor Angles/Tie Rods/Etc.)
Steel Sheet Piling
Floor Drains

PROJECT NUMBER
SHEET NO.
C.N.
STRUCTURE NUMBER
PROFESSIONAL CIVIL ENGINEER MARK J. TRAYNOWICZ E-8119 STATE OF NEBRASKA
BRIDGE ENGINEER
GENERAL NOTES, QUANTITIES, & INDEX - 3 SPAN STREAM
LOCATION
SKEW
ROADWAY
DESIGN LIVE LOAD
DATE
COUNTY
RWY. NO.
REF. POST.
STA.
DETAILED BY
CHECKED BY
DESIGNED BY
STATE OF NEBRASKA - DEPARTMENT OF ROADS - BRIDGE DIVISION
NDOR Nebraska Department of Roads
SPECIAL PLAN NO.

File: 2013 BSPP - Base Sheets-Chapter 3.dgn User: dcr2081 Computer: DRER1DGE19 DGN 07:59 2014-10-27

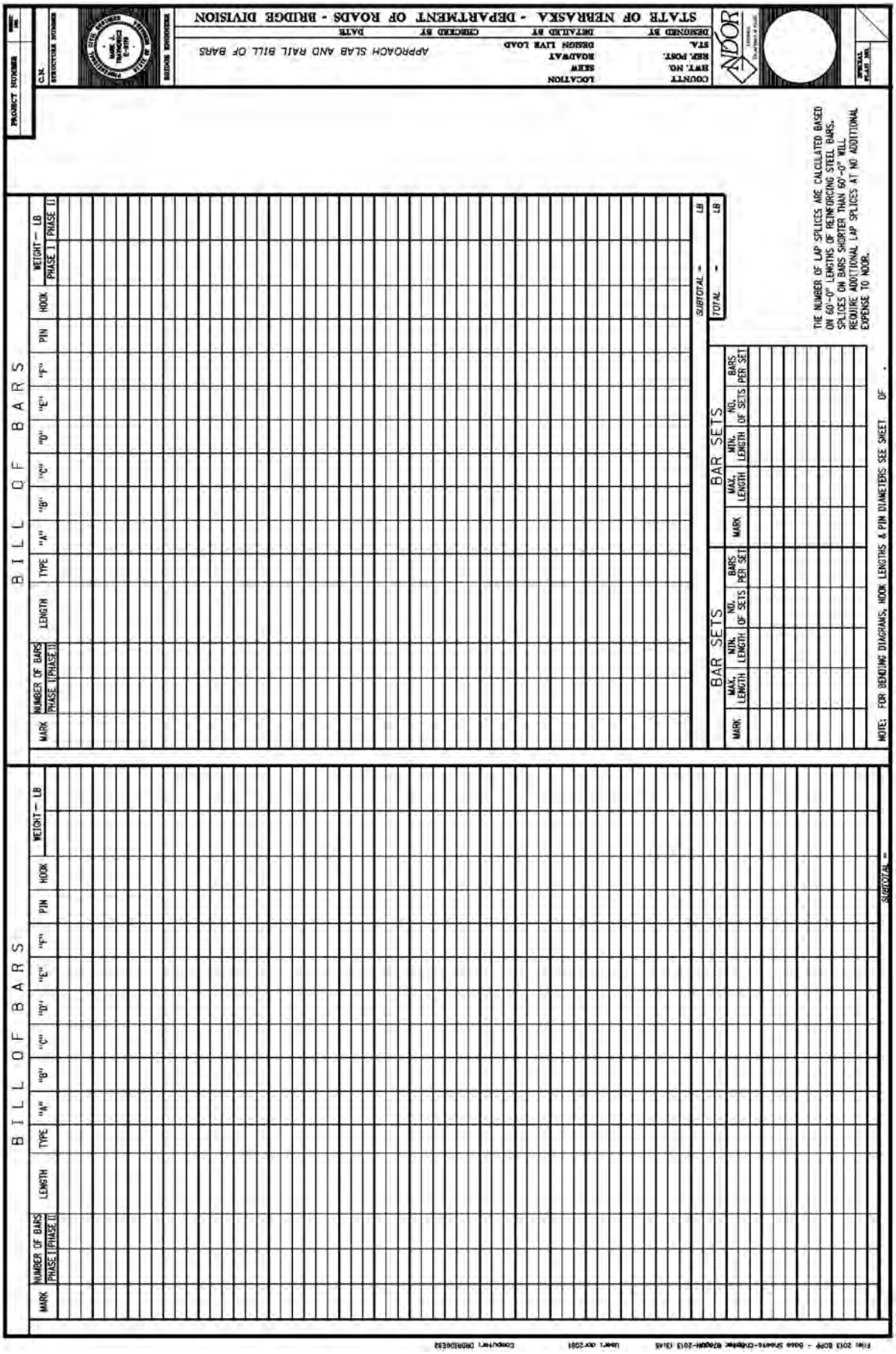
STATE OF NEBRASKA - DEPARTMENT OF ROADS - BRIDGE DIVISION
APPROACH SLAB AND RAIL BILL OF BARS
COUNTY
HWY. NO.
REF. POST.
STA.
LOCATION
SEW
ROADWAY
DESIGN LIVE LOAD
DESIGNED BY
DETAILED BY
CHECKED BY
DATE
PROJECT NUMBER
C.N.
BRIDGE ENGINEER
BILL OF BARS
MARK
NUMBER OF BARS PHASE I PHASE II
LENGTH
TYPE
"A"
"B"
"C"
"D"
"E"
"F"
PIN
HOOK
WEIGHT - LB
PHASE I
PHASE II
SUBTOTAL -
TOTAL -
LB
BAR SETS
MARK
MAX. LENGTH
MIN. LENGTH
NO. OF SETS
BARS PER SET
THE NUMBER OF LAP SPLICES ARE CALCULATED BASED ON 60'-0" LENGTHS OF REINFORCING STEEL BARS. SPLICES ON BARS SHORTER THAN 60'-0" WILL REQUIRE ADDITIONAL LAP SPLICES AT NO ADDITIONAL EXPENSE TO NDOR.
NOTE: FOR BENDING DIAGRAMS, HOOK LENGTHS & PIN DIAMETERS SEE SHEET OF .

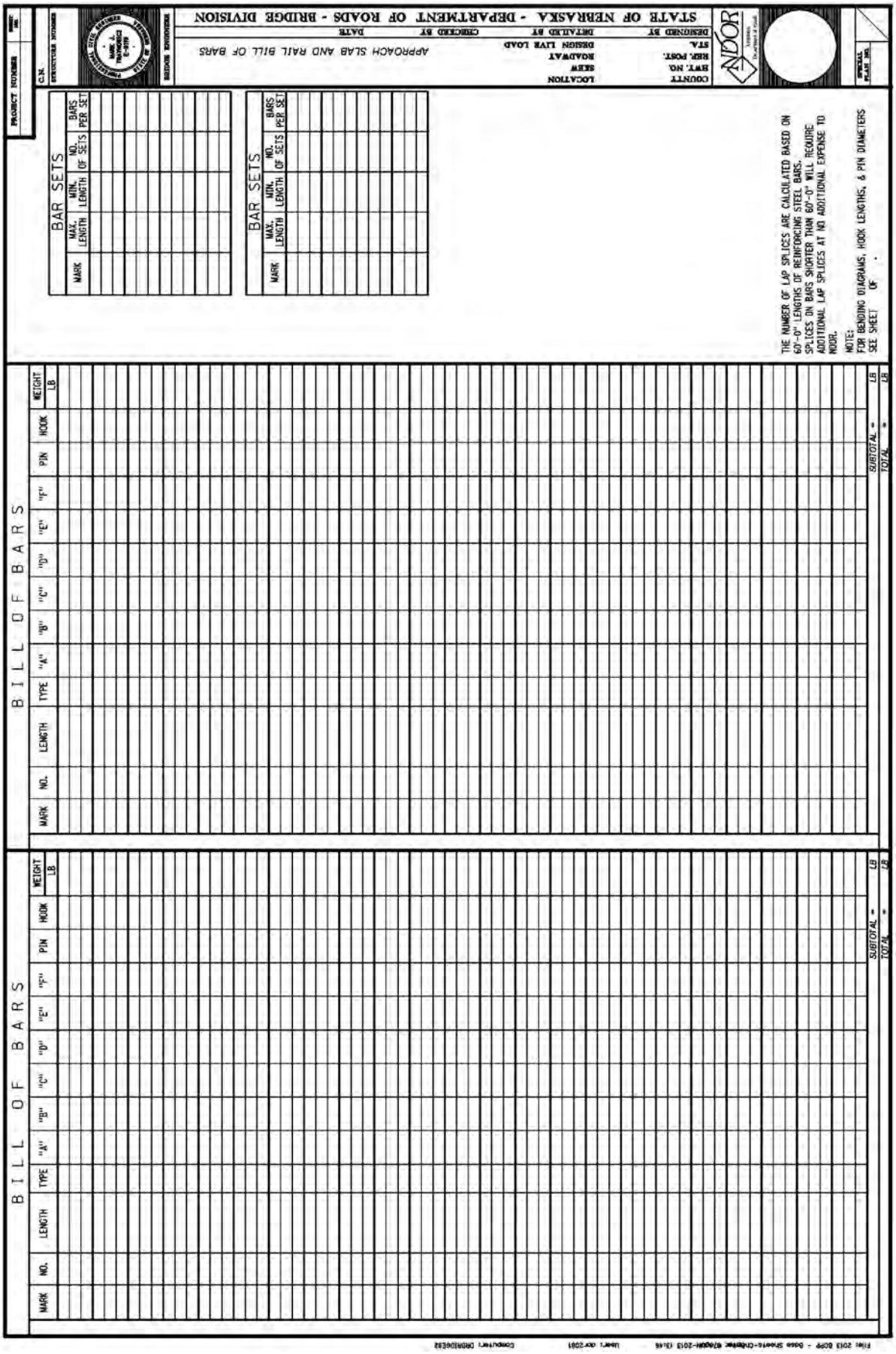
STATE OF NEBRASKA - DEPARTMENT OF ROADS - BRIDGE DIVISION
APPROACH SLAB AND RAIL BILL OF BARS
COUNTY
HWY. NO.
SECT.
LOCATION
RDWAY
DESIGN LIVE LOAD
STA.
BRR. POST.
DESIGNED BY
DETAILED BY
CHECKED BY
DATE
PROJECT NUMBER
C.N.
STRUCTURE NUMBER
BRIDGE ENGINEER
BILL OF BARS
MARK
NO.
LENGTH
TYPE
"A"
"B"
"C"
"D"
"E"
"F"
PIN
HOOK
WEIGHT LB
SUBTOTAL =
TOTAL =
BAR SETS
MARK
MAX. LENGTH
MIN. LENGTH
NO. OF SETS
BARS PER SET
THE NUMBER OF LAP SPLICES ARE CALCULATED BASED ON 60'-0" LENGTHS OF REINFORCING STEEL BARS. SPLICES ON BARS SHORTER THAN 60'-0" WILL REQUIRE ADDITIONAL LAP SPLICES AT NO ADDITIONAL EXPENSE TO NDOR.
NOTE:
FOR BENDING DIAGRAMS, HOOK LENGTHS, & PIN DIAMETERS SEE SHEET OF .

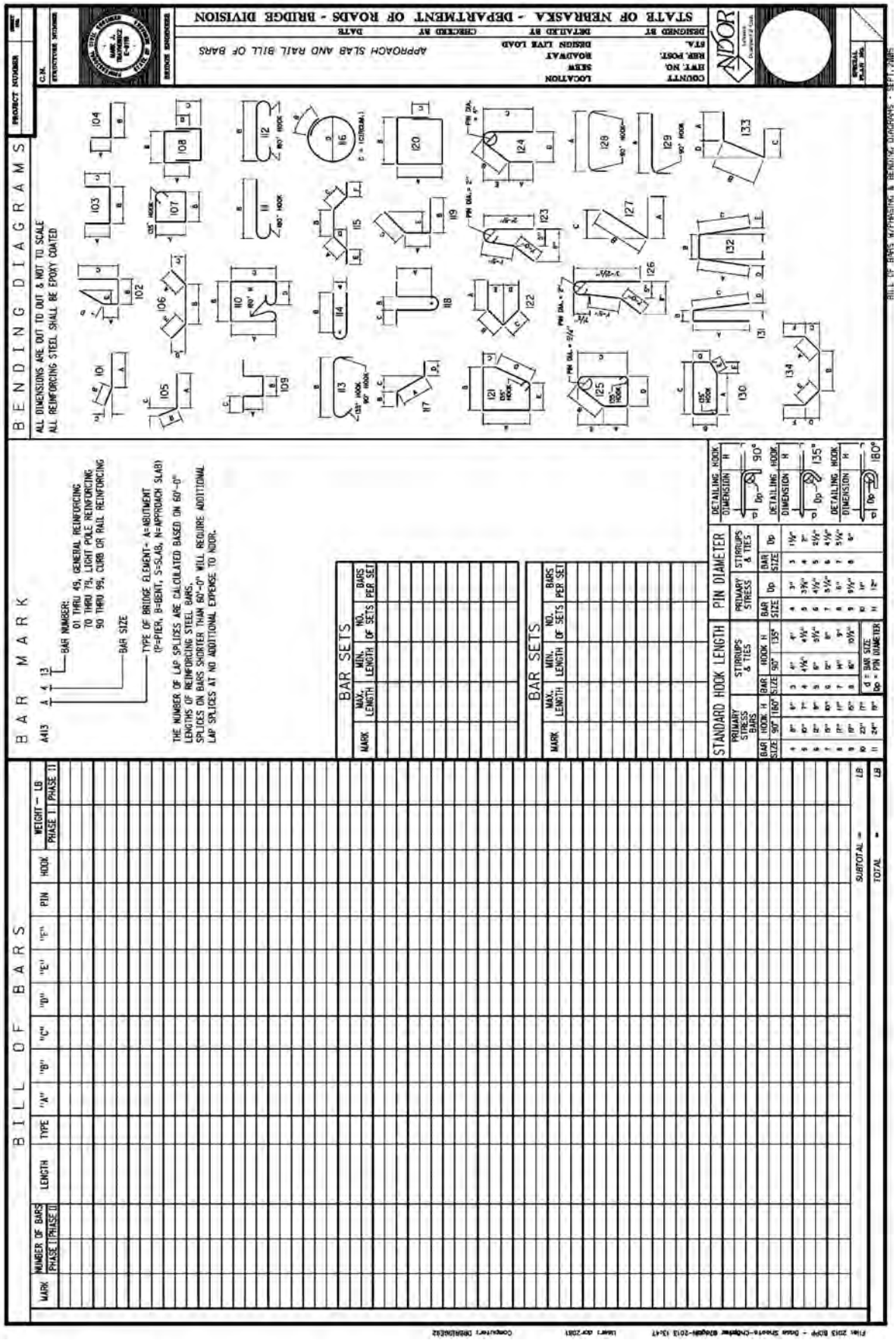
STATE OF NEBRASKA - DEPARTMENT OF ROADS - BRIDGE DIVISION
APPROACH SLAB AND RAIL BILL OF BARS
BENDING DIAGRAMS
ALL DIMENSIONS ARE OUT TO OUT & NOT TO SCALE
ALL REINFORCING STEEL SHALL BE EPOXY COATED
BAR MARK
A413 4 4 13
BAR NUMBER: 01 THRU 49, GENERAL REINFORCING 70 THRU 73, LIGHT POLE REINFORCING 90 THRU 99, CURB OR RAIL REINFORCING
BAR SIZE
TYPE OF BRIDGE ELEMENT- A=ABUTMENT (P=PIER, B=BENT, S=SLAB, N=APPROACH SLAB)
THE NUMBER OF LAP SPLICES ARE CALCULATED BASED ON 60'-0" LENGTHS OF REINFORCING STEEL BARS. SPLICES ON BARS SHORTER THAN 60'-0" WILL REQUIRE ADDITIONAL LAP SPLICES AT NO ADDITIONAL EXPENSE TO NDOR.
BAR SETS
MARK
MAX. LENGTH
MIN. LENGTH
NO. OF SETS
BARS PER SET
STANDARD HOOK LENGTH
PRIMARY STRESS BARS
STIRRUPS & TIES
PIN DIAMETER
DETAILING HOOK DIMENSION H
90°
135°
180°
BILL OF BARS
MARK
NUMBER OF BARS
LENGTH
TYPE
"A"
"B"
"C"
"D"
"E"
"F"
PIN
HOOK
WEIGHT - LB
PHASE I
PHASE II
SUBTOTAL =
TOTAL =
LB

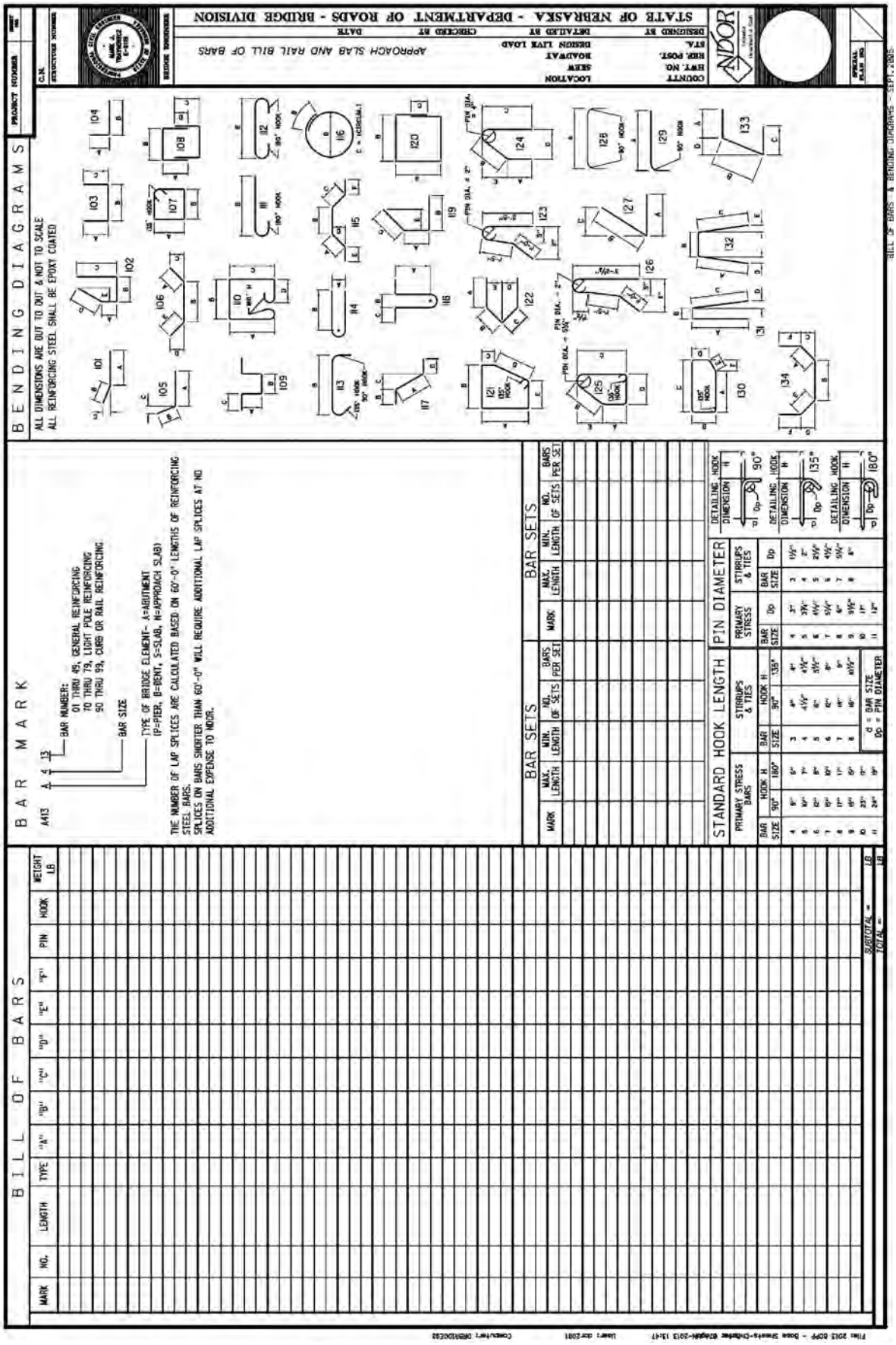
STATE OF NEBRASKA - DEPARTMENT OF ROADS - BRIDGE DIVISION
APPROACH SLAB AND RAIL BILL OF BARS
BENDING DIAGRAMS
ALL DIMENSIONS ARE OUT TO OUT & NOT TO SCALE
ALL REINFORCING STEEL SHALL BE EPOXY COATED
BAR MARK
BAR NUMBER:
01 THRU 49, GENERAL REINFORCING
70 THRU 79, LIGHT POLE REINFORCING
90 THRU 99, CURB OR RAIL REINFORCING
BAR SIZE
TYPE OF BRIDGE ELEMENT- A=ABUTMENT (P=PIER, B=BENT, S=SLAB, N=APPROACH SLAB)
THE NUMBER OF LAP SPLICES ARE CALCULATED BASED ON 60'-0" LENGTHS OF REINFORCING STEEL BARS.
SPLICES ON BARS SHORTER THAN 60'-0" WILL REQUIRE ADDITIONAL LAP SPLICES AT NO ADDITIONAL EXPENSE TO NDOR.
BAR SETS
STANDARD HOOK LENGTH
PIN DIAMETER
DETAILING HOOK DIMENSION
BILL OF BARS
MARK
NO.
LENGTH
TYPE
WEIGHT LB
SUBTOTAL -
TOTAL -

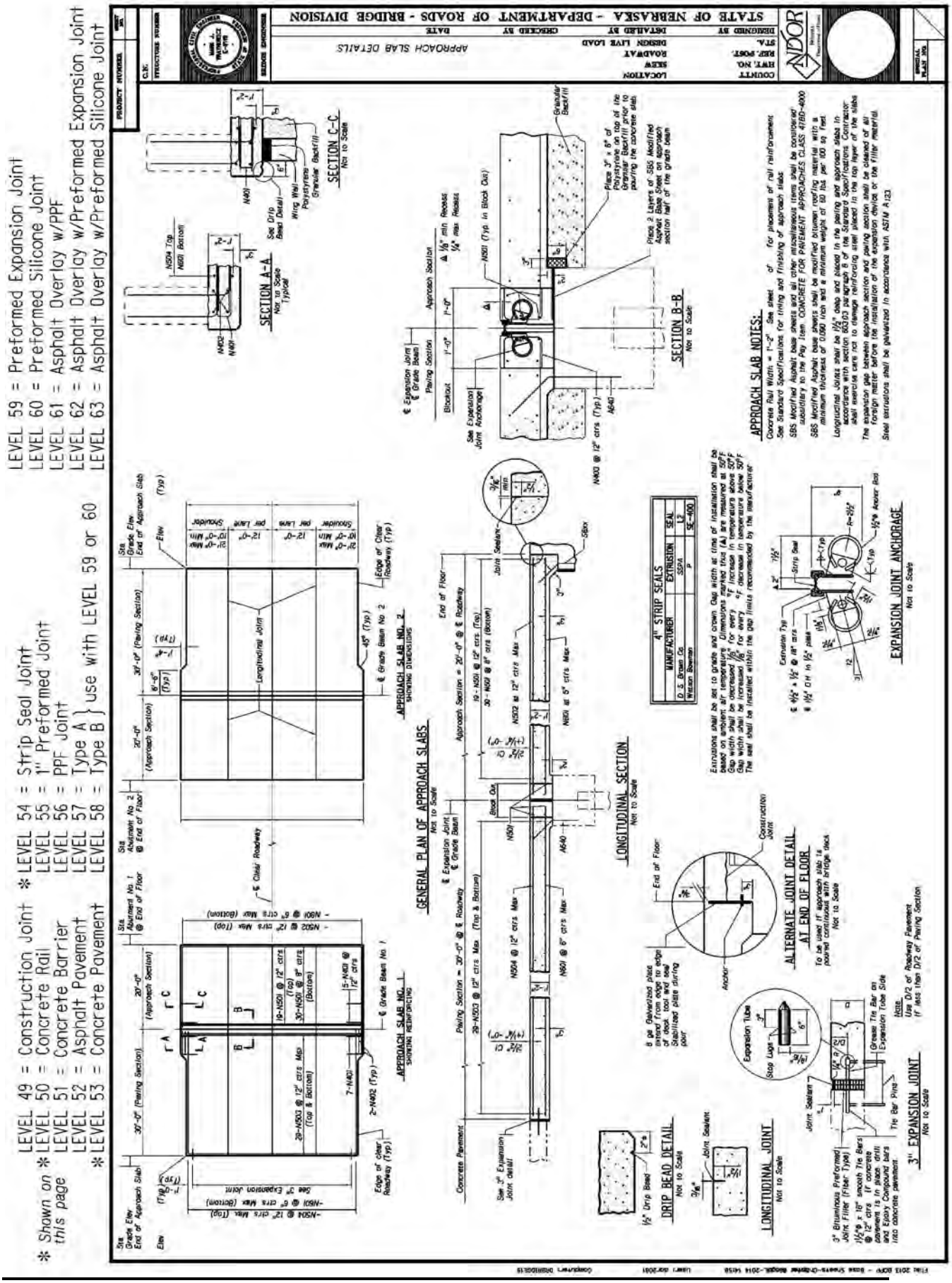
LEVEL 49 = Construction Joint
LEVEL 50 = Concrete Rail
LEVEL 51 = Concrete Barrier
LEVEL 52 = Asphalt Pavement
LEVEL 53 = Concrete Pavement
* LEVEL 54 = Strip Seal Joint
LEVEL 55 = 1" Preformed Joint
LEVEL 56 = PPF Joint
LEVEL 57 = Type A
LEVEL 58 = Type B
use with LEVEL 59 or 60
* Shown on this page
LEVEL 59 = Preformed Expansion Joint
LEVEL 60 = Preformed Silicone Joint
LEVEL 61 = Asphalt Overlay w/PPF
LEVEL 62 = Asphalt Overlay w/Preformed Expansion Joint
LEVEL 63 = Asphalt Overlay w/Preformed Silicone Joint
STATE OF NEBRASKA - DEPARTMENT OF ROADS - BRIDGE DIVISION
APPROACH SLAB DETAILS
SECTION A-A
SECTION C-C
SECTION B-B
APPROACH SLAB NOTES:
APPROACH SLAB NO. 2
APPROACH SLAB NO. 1
GENERAL PLAN OF APPROACH SLABS
LONGITUDINAL SECTION
4" STRIP SEALS
EXPANSION JOINT ANCHORAGE
ALTERNATE JOINT DETAIL AT END OF FLOOR
DRIP BEAD DETAIL
LONGITUDINAL JOINT
3" EXPANSION JOINT

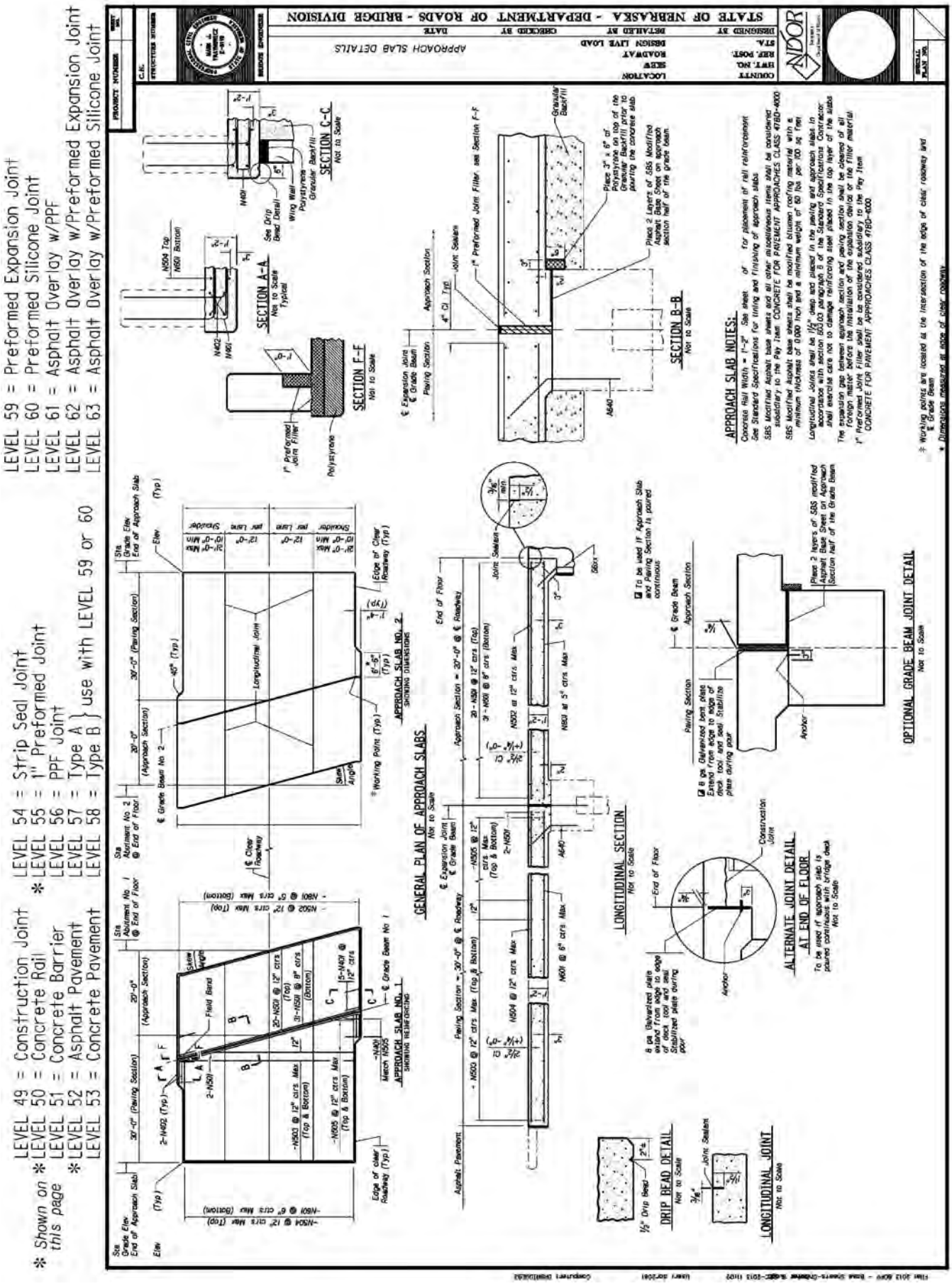
LEVEL 49 = Construction Joint
LEVEL 50 = Concrete Rail
LEVEL 51 = Concrete Barrier
LEVEL 52 = Asphalt Pavement
LEVEL 53 = Concrete Pavement
LEVEL 54 = Strip Seal Joint
LEVEL 55 = 1" Preformed Joint
LEVEL 56 = PPF Joint
LEVEL 57 = Type A
LEVEL 58 = Type B
use with LEVEL 59 or 60
LEVEL 59 = Preformed Expansion Joint
LEVEL 60 = Preformed Silicone Joint
LEVEL 61 = Asphalt Overlay w/PPF
LEVEL 62 = Asphalt Overlay w/Preformed Expansion Joint
LEVEL 63 = Asphalt Overlay w/Preformed Silicone Joint
* Shown on this page
STATE OF NEBRASKA - DEPARTMENT OF ROADS - BRIDGE DIVISION
APPROACH SLAB DETAILS
SECTION A-A
SECTION B-B
SECTION C-C
SECTION F-F
APPROACH SLAB NOTES:
APPROACH SLAB NO. 1
APPROACH SLAB NO. 2
GENERAL PLAN OF APPROACH SLABS
LONGITUDINAL SECTION
OPTIONAL GRADE BEAM JOINT DETAIL
ALTERNATE JOINT DETAIL AT END OF FLOOR
DRIP BEAD DETAIL
LONGITUDINAL JOINT

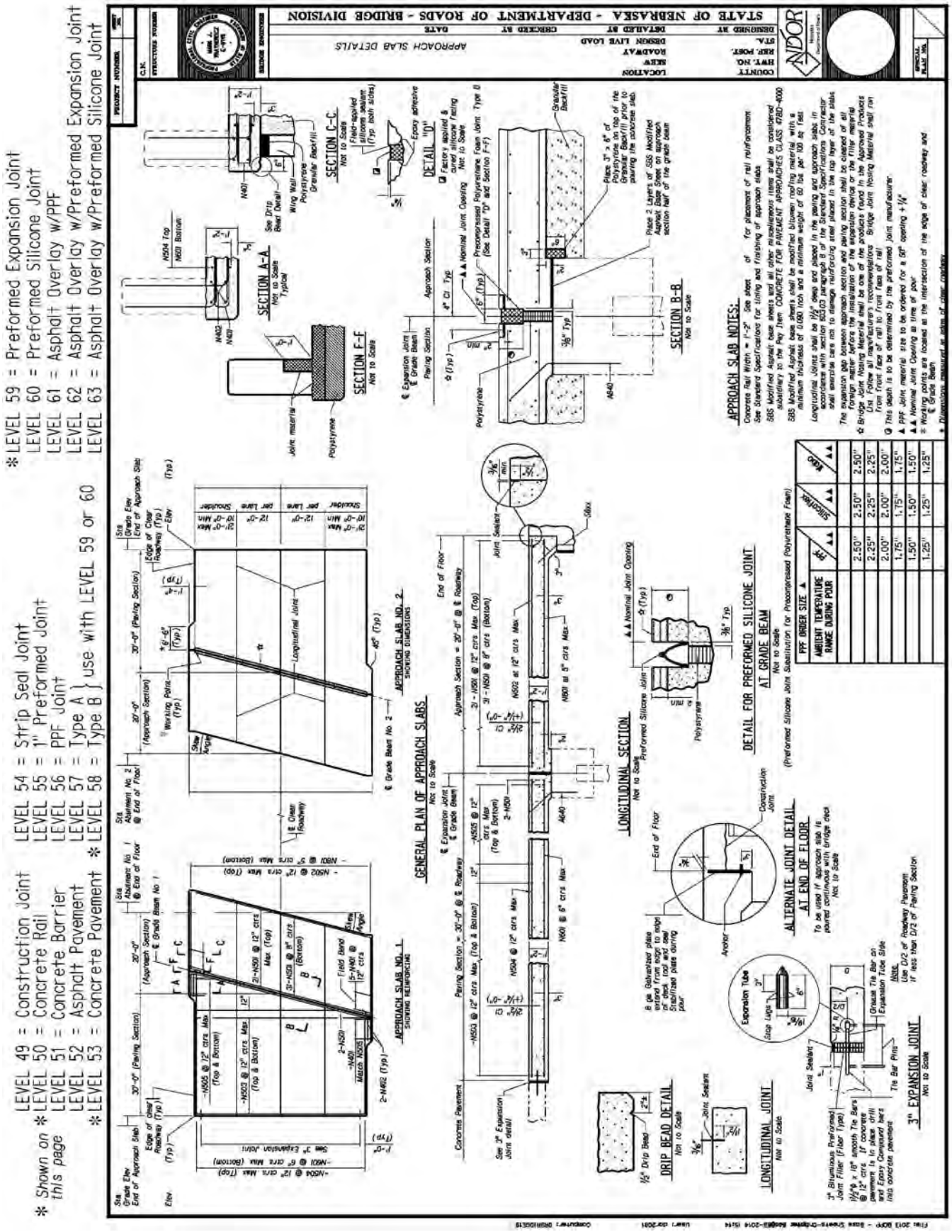
LEVEL 49 = Construction Joint
LEVEL 50 = Concrete Rail
LEVEL 51 = Concrete Barrier
LEVEL 52 = Asphalt Pavement
LEVEL 53 = Concrete Pavement
LEVEL 54 = Strip Seal Joint
LEVEL 55 = 1" Preformed Joint
LEVEL 56 = PPF Joint
LEVEL 57 = Type A
LEVEL 58 = Type B
use with LEVEL 59 or 60
* Shown on this page
LEVEL 59 = Preformed Expansion Joint
LEVEL 60 = Preformed Silicone Joint
LEVEL 61 = Asphalt Overlay w/PPF
LEVEL 62 = Asphalt Overlay w/Preformed Expansion Joint
LEVEL 63 = Asphalt Overlay w/Preformed Silicone Joint
STATE OF NEBRASKA - DEPARTMENT OF ROADS - BRIDGE DIVISION
APPROACH SLAB DETAILS
SECTION A-A
SECTION C-C
DETAIL "D"
SECTION F-F
SECTION B-B
APPROACH SLAB NOTES:
GENERAL PLAN OF APPROACH SLABS
APPROACH SLAB NO. 1
APPROACH SLAB NO. 2
LONGITUDINAL SECTION
DETAIL FOR PREFORMED SILICONE JOINT AT GRADE BEAM
ALTERNATE JOINT DETAIL AT END OF FLOOR
DRIP BEAD DETAIL
LONGITUDINAL JOINT
3" EXPANSION JOINT

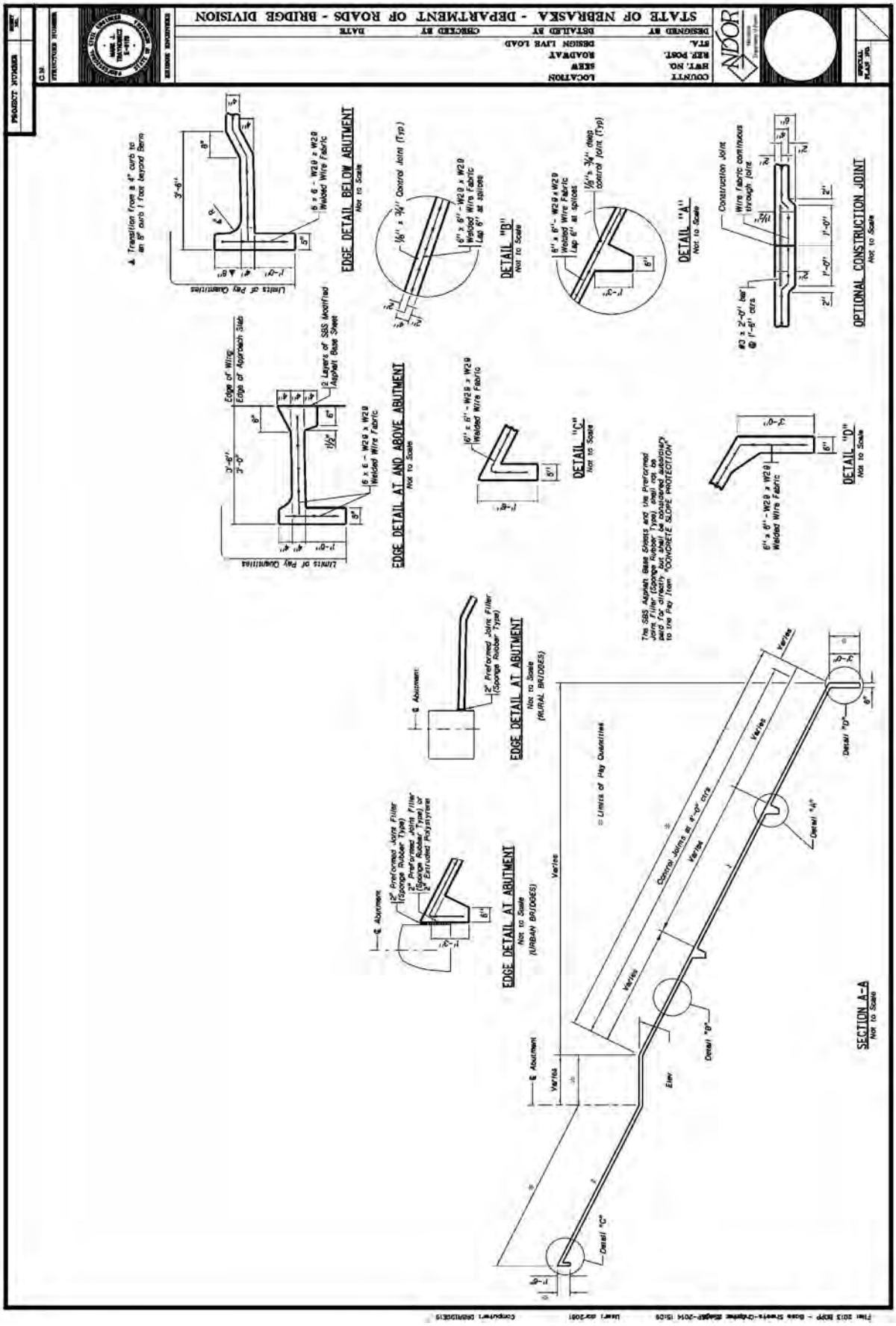
STATE OF NEBRASKA - DEPARTMENT OF ROADS - BRIDGE DIVISION
EDGE DETAIL BELOW ABUTMENT
Not to Scale
DETAIL "B"
Not to Scale
DETAIL "A"
Not to Scale
OPTIONAL CONSTRUCTION JOINT
Not to Scale
EDGE DETAIL AT AND ABOVE ABUTMENT
Not to Scale
DETAIL "C"
Not to Scale
DETAIL "D"
Not to Scale
EDGE DETAIL AT ABUTMENT
Not to Scale
(RURAL BRIDGES)
EDGE DETAIL AT ABUTMENT
Not to Scale
(URBAN BRIDGES)
SECTION A-A
Not to Scale
Limits of Pay Quantities
Control Joints at 4'-0" ctrs
Varies
Detail "C"
Detail "D"
Detail "B"
Detail "A"
Elev.
℄ Abutment
2" Preformed Joint Filler (Sponge Rubber Type)
2" Preformed Joint Filler (Sponge Rubber Type) 1/2" Extruded Polystyrene
The SBS Asphalt Base Sheets and the Preformed Joint Filler (Sponge Rubber Type) shall not be paid for directly but shall be considered subsidiary to the Pay Item "CONCRETE SLOPE PROTECTION"
Wire fabric continuous through joint
Construction Joint
#3 x 2'-0" bar @ 1'-6" ctrs
Edge of Wing
Edge of Approach Slab
12 Layers of SBS Modified Asphalt Base Sheet
6 x 6 - W2.9 x W2.9 Welded Wire Fabric
6" x 6" - W2.9 x W2.9 Welded Wire Fabric
Lap 6" at splices
1/8" x 3/4" Control Joint (Typ)
1/8" x 3/4" deep control joint (Typ)
Transition from a 4" curb to an 8" curb 1 foot beyond Berm

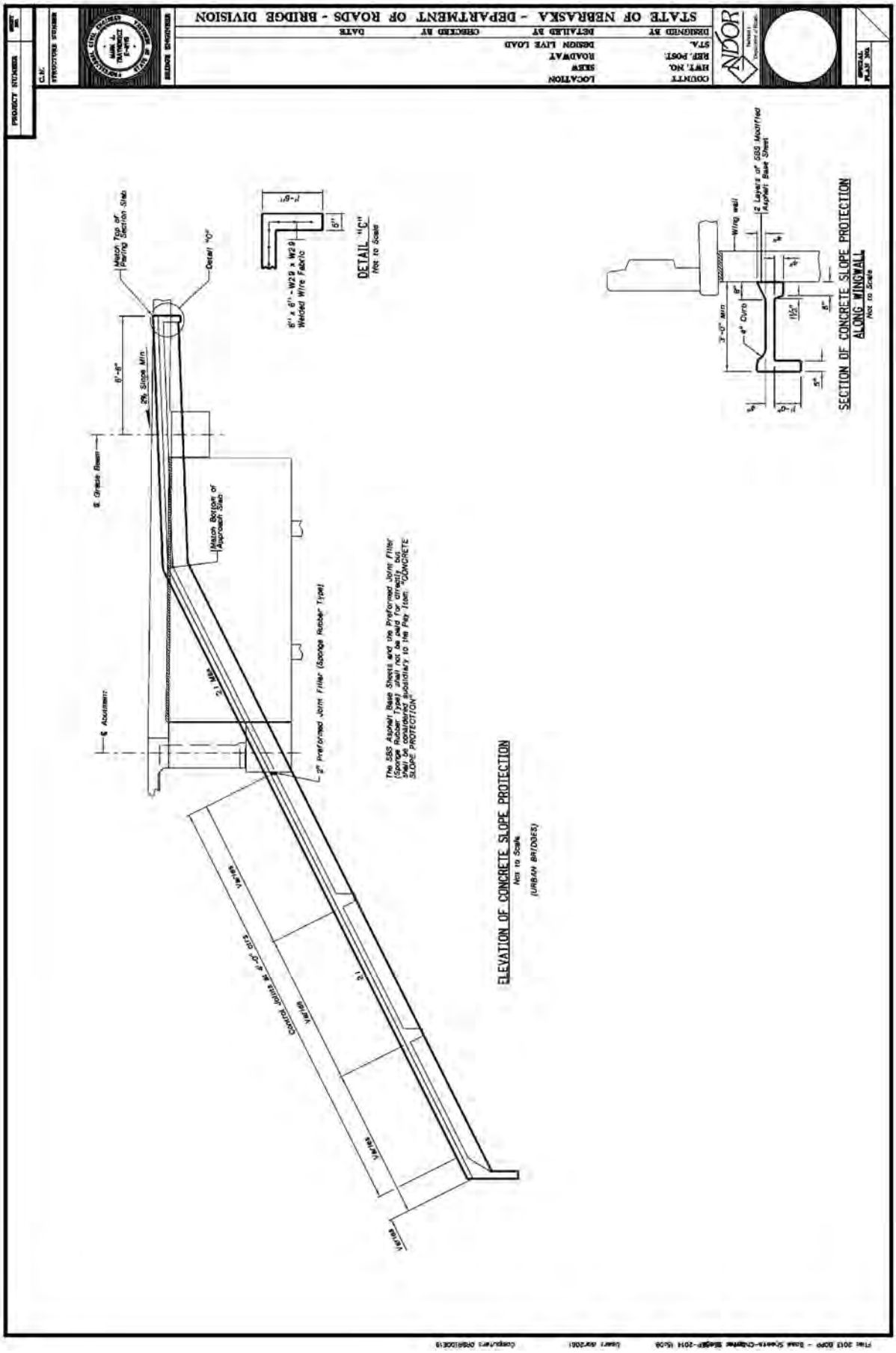
STATE OF NEBRASKA - DEPARTMENT OF ROADS - BRIDGE DIVISION
DATE
CHECKED BY
DETAILED BY
DESIGNED BY
COUNTY
LOCATION
HWY. NO.
REF. POST
ROADWAY
STA.
SKEW
DESIGN LIVE LOAD
PROJECT NUMBER
STRUCTURE NUMBER
BRIDGE ENGINEER
STRUCTURES ENGINEER
C.L.E.
Match Top of Paving Section Slab
Detail "C"
6" x 6" - W29 x W29 Welded Wire Fabric
DETAIL "C"
Not to Scale
2% Slope Min.
℄ Grade Break
Match Bottom of Approach Slab
℄ Abutment
2" Preformed Joint Filler (Sponge Rubber Type)
The SBS Asphalt Base Sheets and the Preformed Joint Filler (Sponge Rubber Type) shall be paid for at the unit price shall be considered subsidiary to the Pay Item "CONCRETE SLOPE PROTECTION"
Control Joints @ 4'-0" O.C.
ELEVATION OF CONCRETE SLOPE PROTECTION
Not to Scale
(URBAN BRIDGES)
Wing wall
2 Layers of SBS Modified Asphalt Base Sheet
4" Curb
3'-0" Min
SECTION OF CONCRETE SLOPE PROTECTION
ALONG WINGWALL
Not to Scale

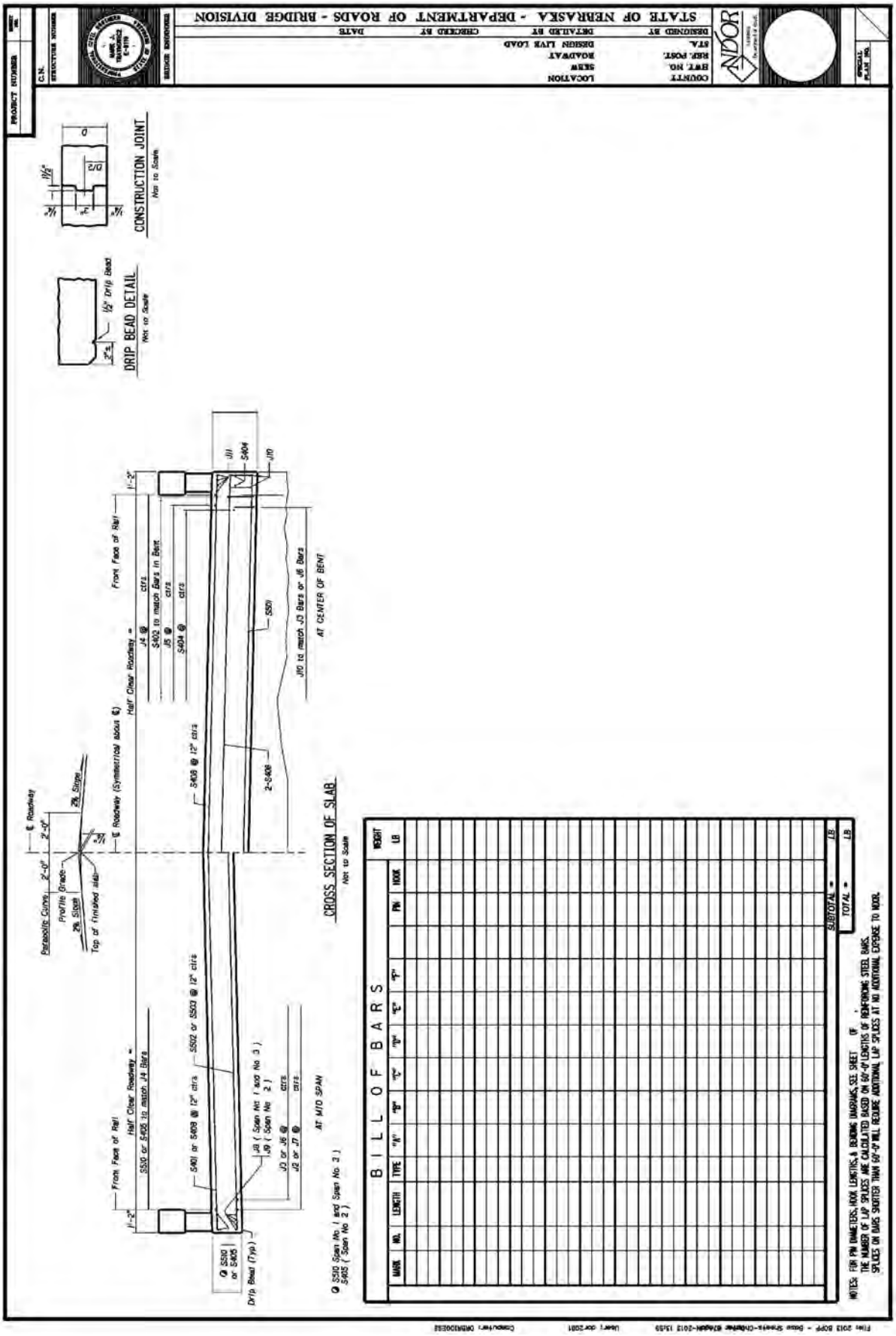
STATE OF NEBRASKA - DEPARTMENT OF ROADS - BRIDGE DIVISION
CONSTRUCTION JOINT
Not to Scale
DRIP BEAD DETAIL
Not to Scale
CROSS SECTION OF SLAB
Not to Scale
BILL OF BARS
MARK
NO.
LENGTH
TYPE
"A"
"B"
"C"
"D"
"E"
"F"
PN
HOOK
WEIGHT
LB
SUBTOTAL =
TOTAL =
NOTES: FOR PIN DIAMETERS, HOOK LENGTHS, & BENDING DIAGRAMS, SEE SHEET OF .
THE NUMBER OF LAP SPLICES ARE CALCULATED BASED ON 60'-0" LENGTHS OF REINFORCING STEEL BARS.
SPLICES ON BARS SHORTER THAN 60'-0" WILL REQUIRE ADDITIONAL LAP SPLICES AT NO ADDITIONAL EXPENSE TO NDOR.
LEVEL 41 = 0 Skew or Less than 30°
* LEVEL 42 = Skew Greater than 30°
* Shown on this page

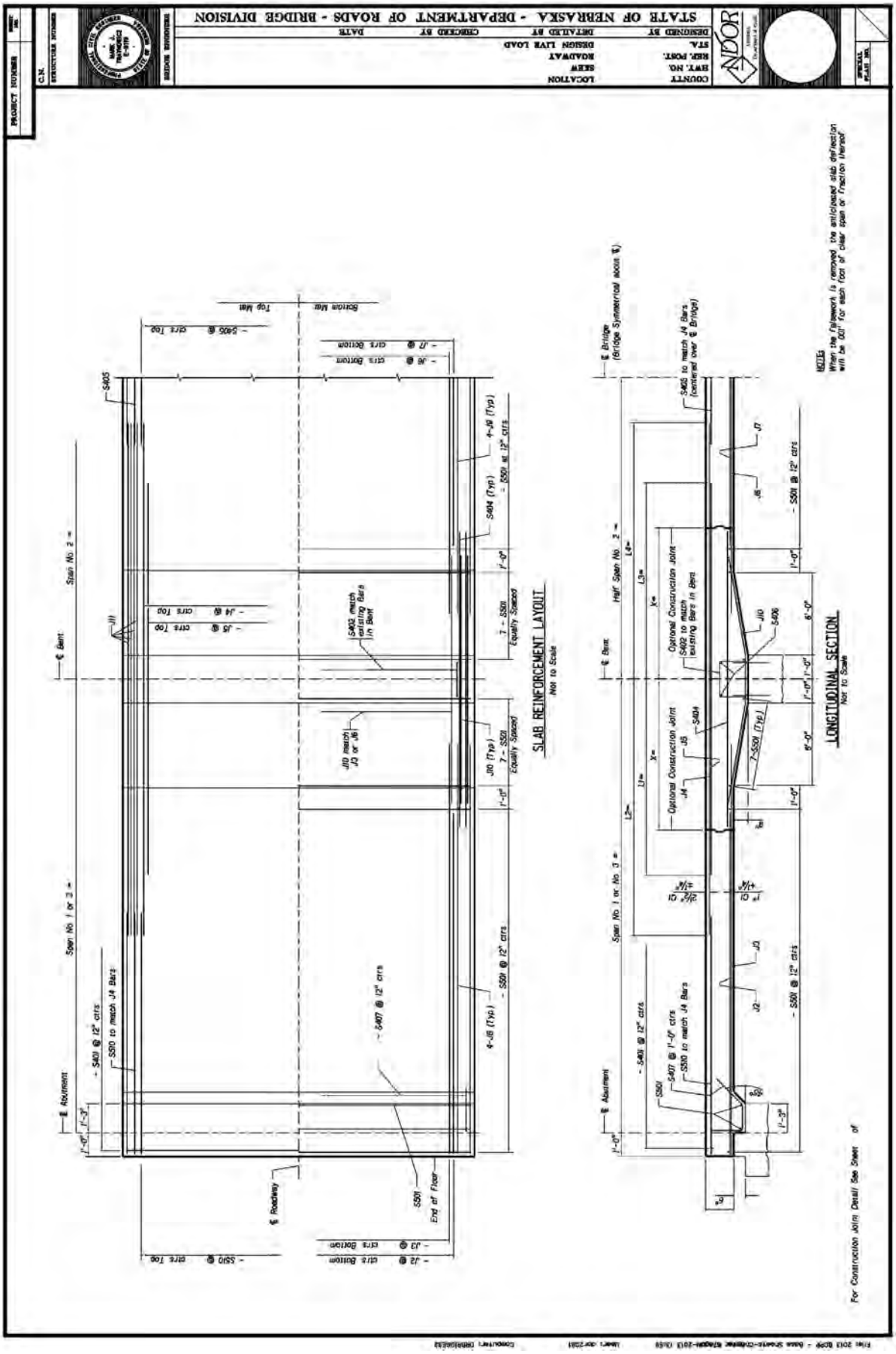

* Shown on this page

LEVEL 43 = 40 ft. (12.190m) to 85 ft. (25.908m) bridge
* LEVEL 44 = 90 ft. (27.432m) to 140 ft. (42.670m) bridge

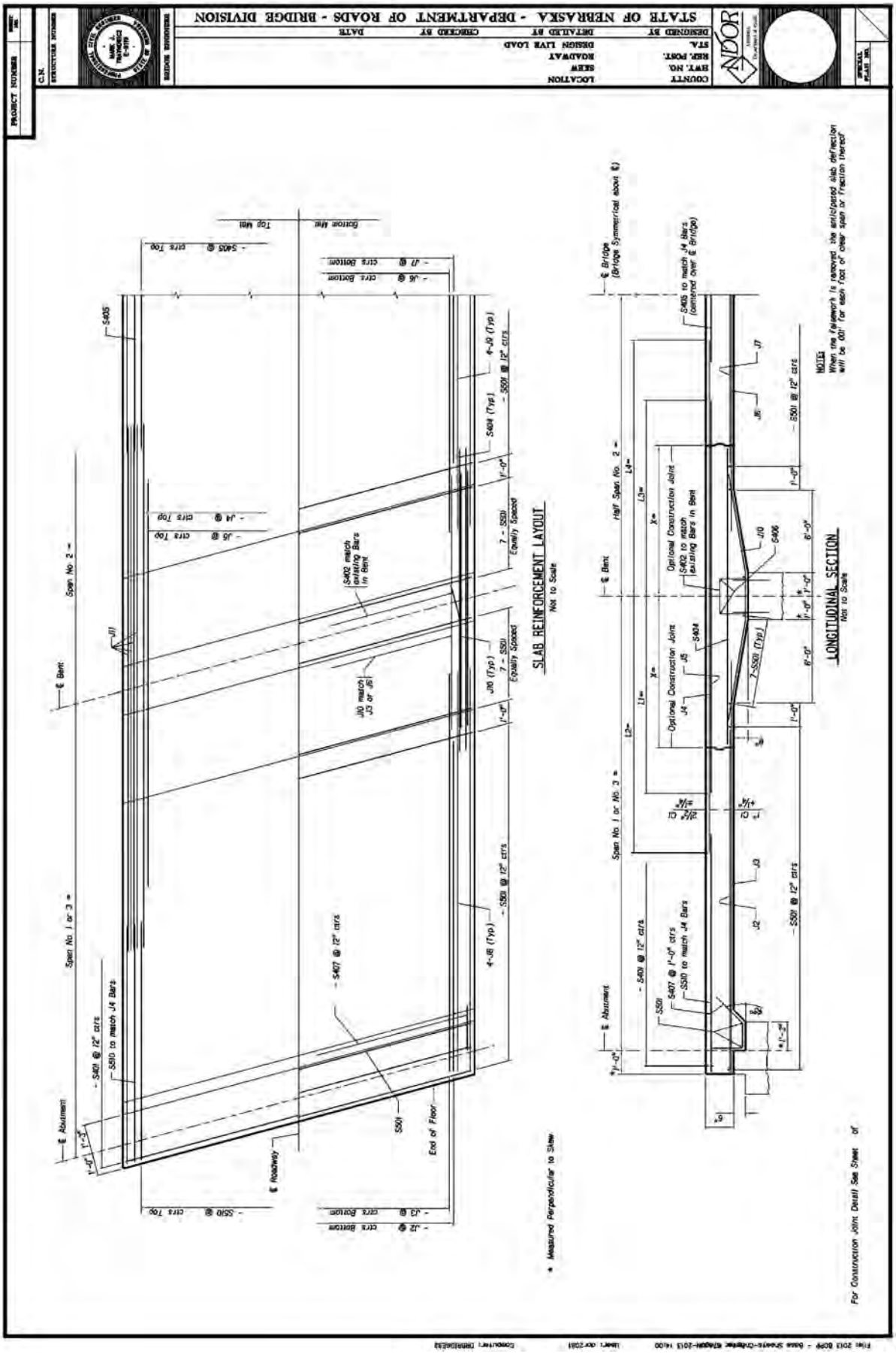

* Shown on this page

LEVEL 43 = 40 ft. (12.190m) to 85 ft. (25.908m) bridge
* LEVEL 44 = 90 ft. (27.432m) to 140 ft. (42.670m) bridge

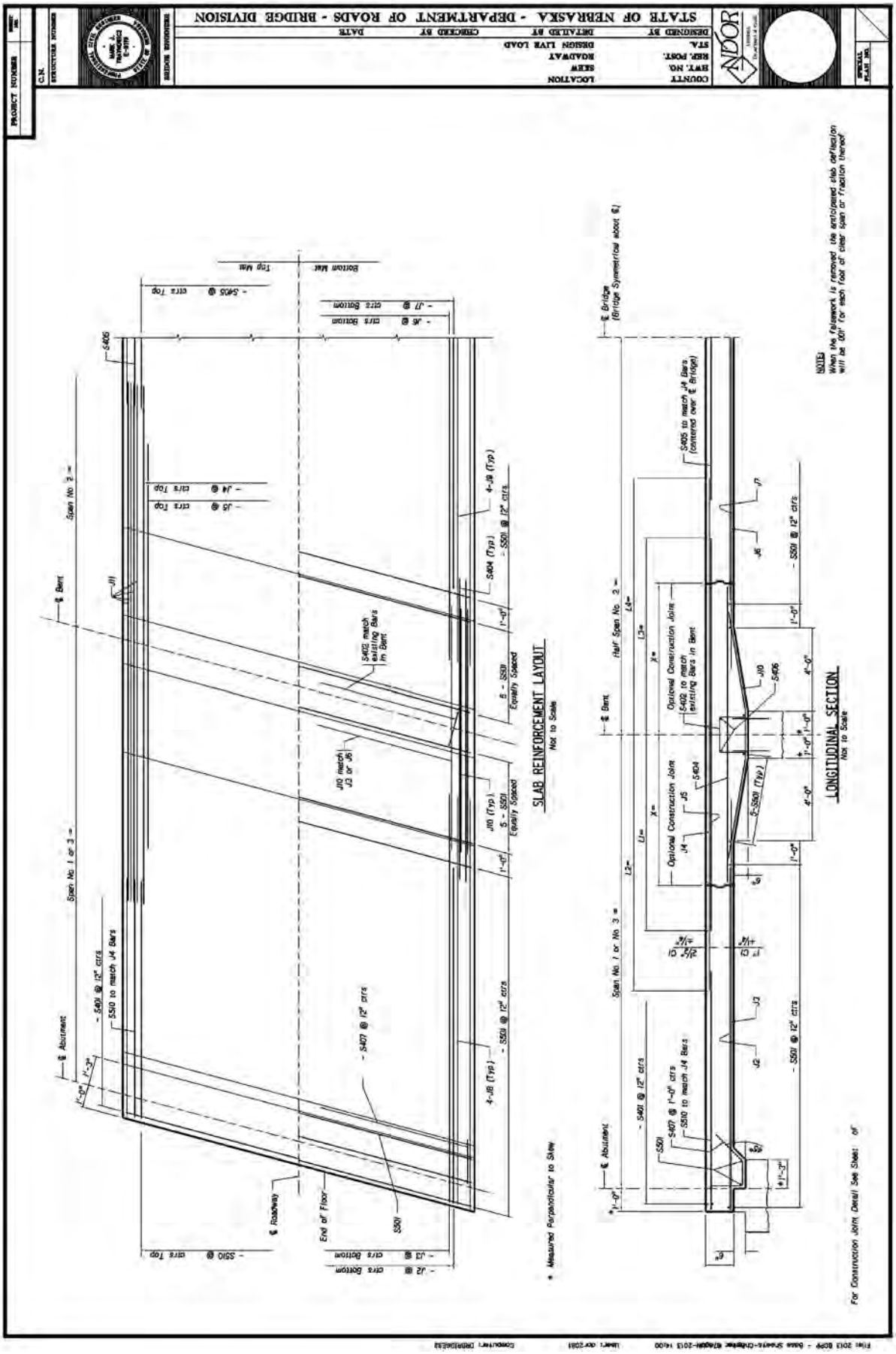

* Shown on this page

* LEVEL 55 = 40 ft. (12.190m) to 85 ft. (25.908m) bridge
LEVEL 56 = 90 ft. (27.432m) to 140 ft. (42.670m) bridge

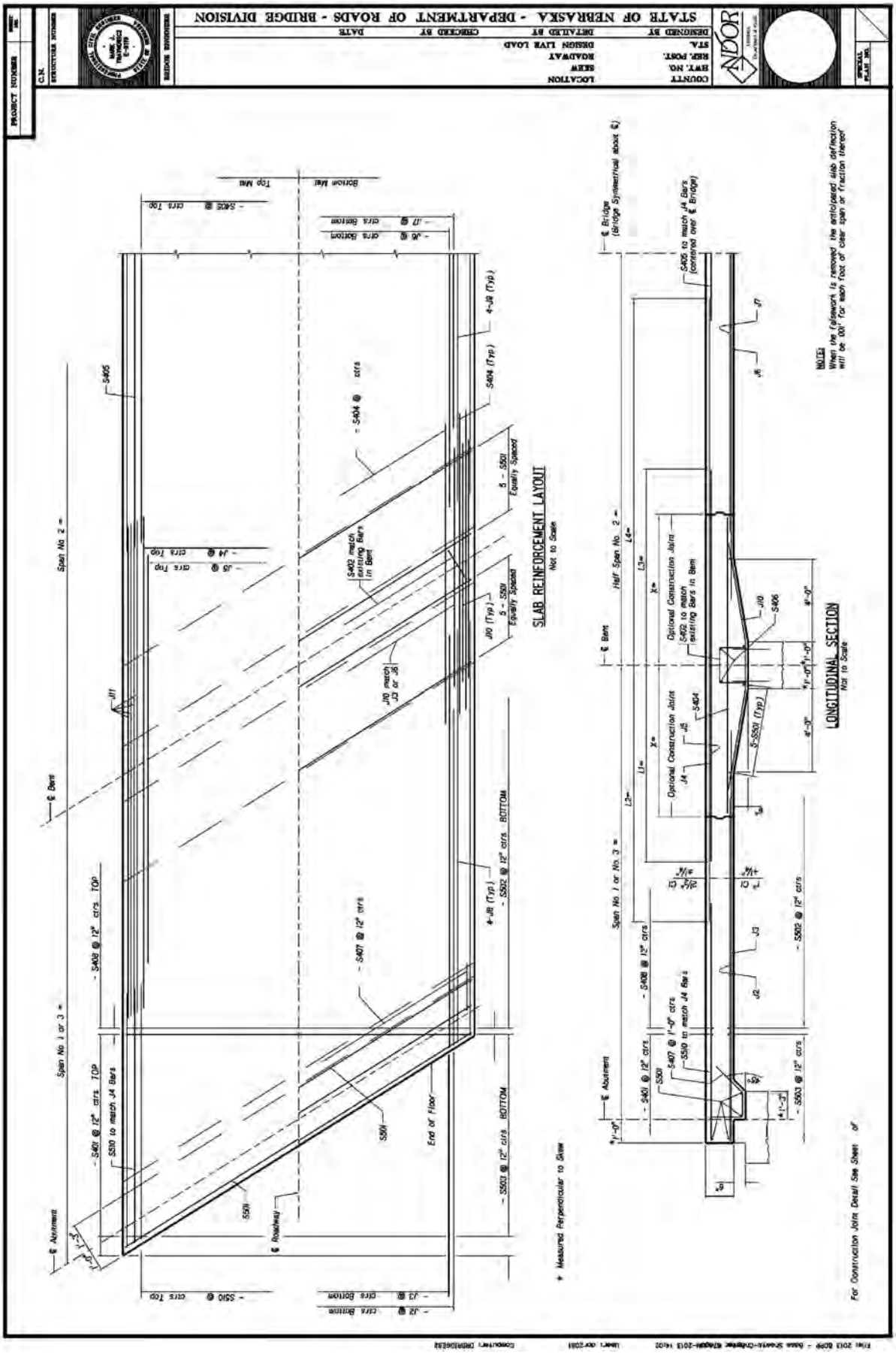

* Shown on this page

* LEVEL 55 = 40 ft. (12.190m) to 85 ft. (25.908m) bridge
LEVEL 56 = 90 ft. (27.432m) to 140 ft. (42.670m) bridge

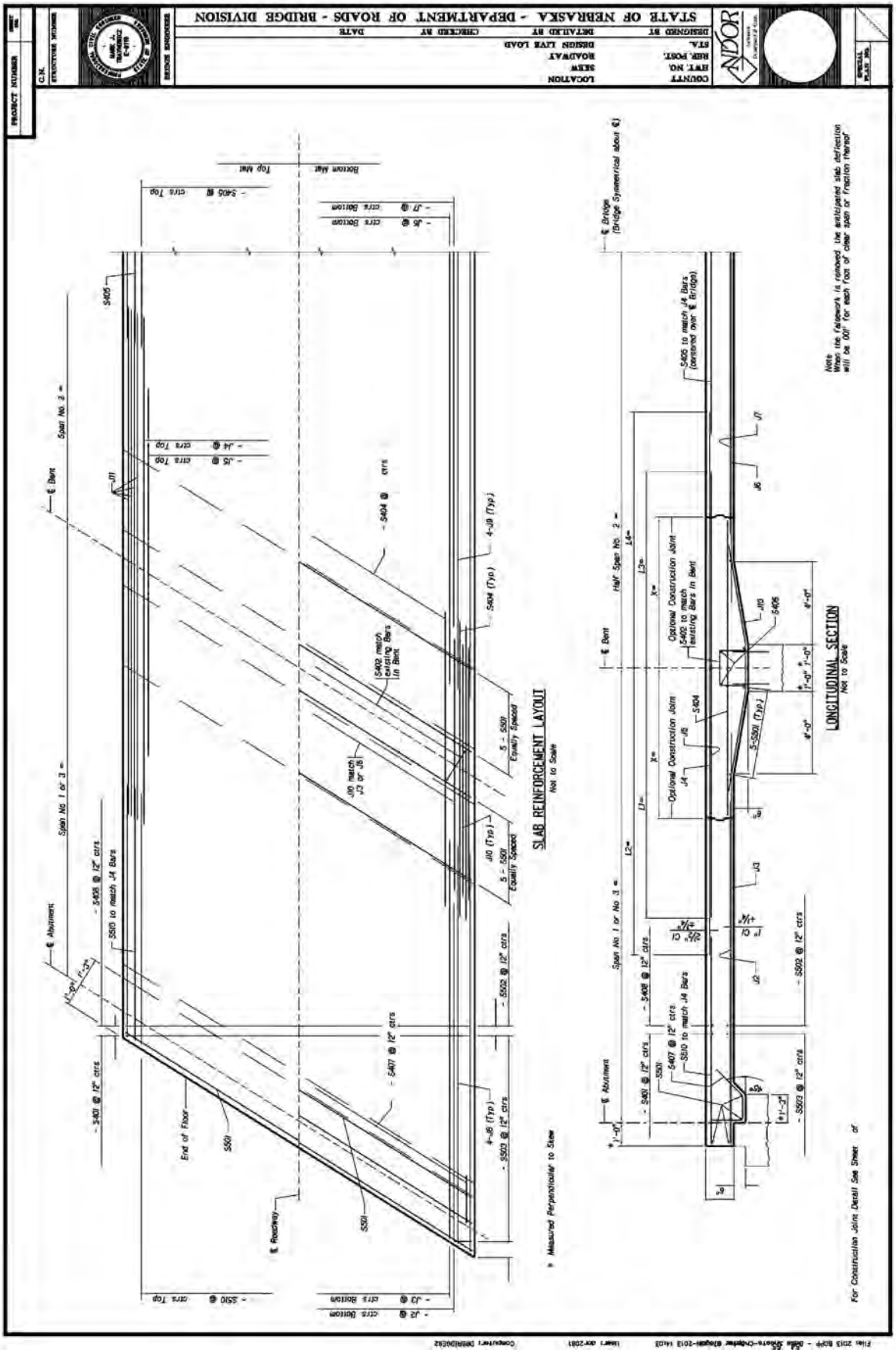
STATE OF NEBRASKA - DEPARTMENT OF ROADS - BRIDGE DIVISION
SLAB REINFORCEMENT LAYOUT
Not to Scale
LONGITUDINAL SECTION
Not to Scale
Note
When the falsework is removed, the anticipated slab deflection will be 0.01" for each foot of clear span or fraction thereof
For Construction Joint Detail See Sheet of
* Measured Perpendicular to Skew
Optional Construction Joint
S402 match existing Bars in Bent
S405 to match J4 Bars (centered over ℄ Bridge)
S408 @ 12" ctrs
S410 to match J4 Bars
S401 @ 12" ctrs
S407 @ 12" ctrs
S502 @ 12" ctrs
S503 @ 12" ctrs
S501
End of Floor
℄ Roadway
℄ Abutment
℄ Bent
Span No. 1 or 3 =
Span No. 2 =
Half Span No. 2 =
℄ Bridge (Bridge Symmetrical about ℄)
Top Mat
Bottom Mat
* LEVEL 55 = 40 ft. (12.190m) to 85 ft. (25.908m) bridge
* LEVEL 56 = 90 ft. (27.432m) to 140 ft. (42.670m) bridge
* Shown on this page

* Shown on this page
Turn on & off levels as needed
Copy sheet
Delete what isn't needed

*LEVEL 50 = Galvanized Floor Drain (note)
LEVEL 51 = Painted Floor Drain (note)
*LEVEL 52 = Standard Inlet
LEVEL 53 = Offset Inlet

LEVEL 54 = 10" Dia. Pipe Inlet
*LEVEL 55 = 34" Closed NU Rail
LEVEL 56 = 42" Closed NU Rail

~~LEVEL 57 = Concrete Rail, use with level 52~~
~~LEVEL 58 = Concrete Rail, use with level 53 or 54~~
LEVEL 59 = 42" Concrete Barrier
LEVEL 60 = 34" Concrete Barrier

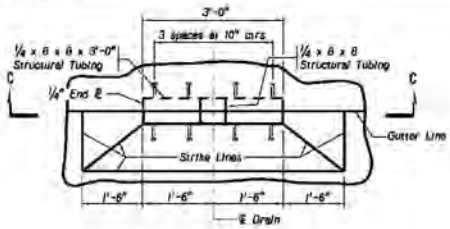

PLAN
Not to Scale

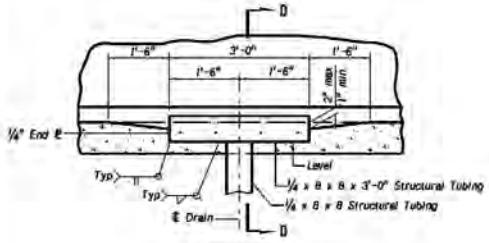

SECTION C-C
Not to Scale

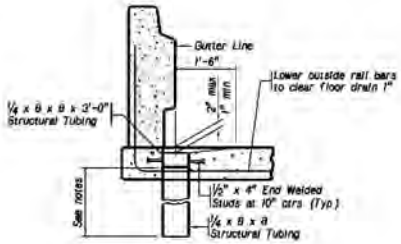

SECTION D-D
Not to Scale

FLOOR DRAIN NOTES

Strike lines may vary to fit conditions.

Field bend or move rail bars to clear floor drain a minimum of 1".

Field bend or cut deck reinforcing to clear floor drain a minimum of 1".

Set floor drains level.

Structural Tubing shall meet the requirements of ASTM A500/A500M Grade B.

The bottom of the ¼ x 6 x 12 structural tubing (down spout) shall extend a minimum of 4" below bottom flange of the girder.

All floor drains shall be galvanized in accordance with ASTM A123/A123M.

PROJECT NUMBER | SHEET NO.
C.N.
STRUCTURE NUMBER
BRIDGE ENGINEER
FLOOR DRAIN DETAILS
LOCATION: SEEW
ROADWAY
DESIGN LIVE LOAD
COUNTY
STT. NO.
REF. POST.
STA.
DESIGNED BY | DETAILED BY | CHECKED BY | DATE
STATE OF NEBRASKA – DEPARTMENT OF ROADS – BRIDGE DIVISION
NDOR
SPECIAL PLAN NO.

File: 2013 BDM – Base Sheets-Drainage Details.dgn Users: dor2061 Coordinate: [illegible]

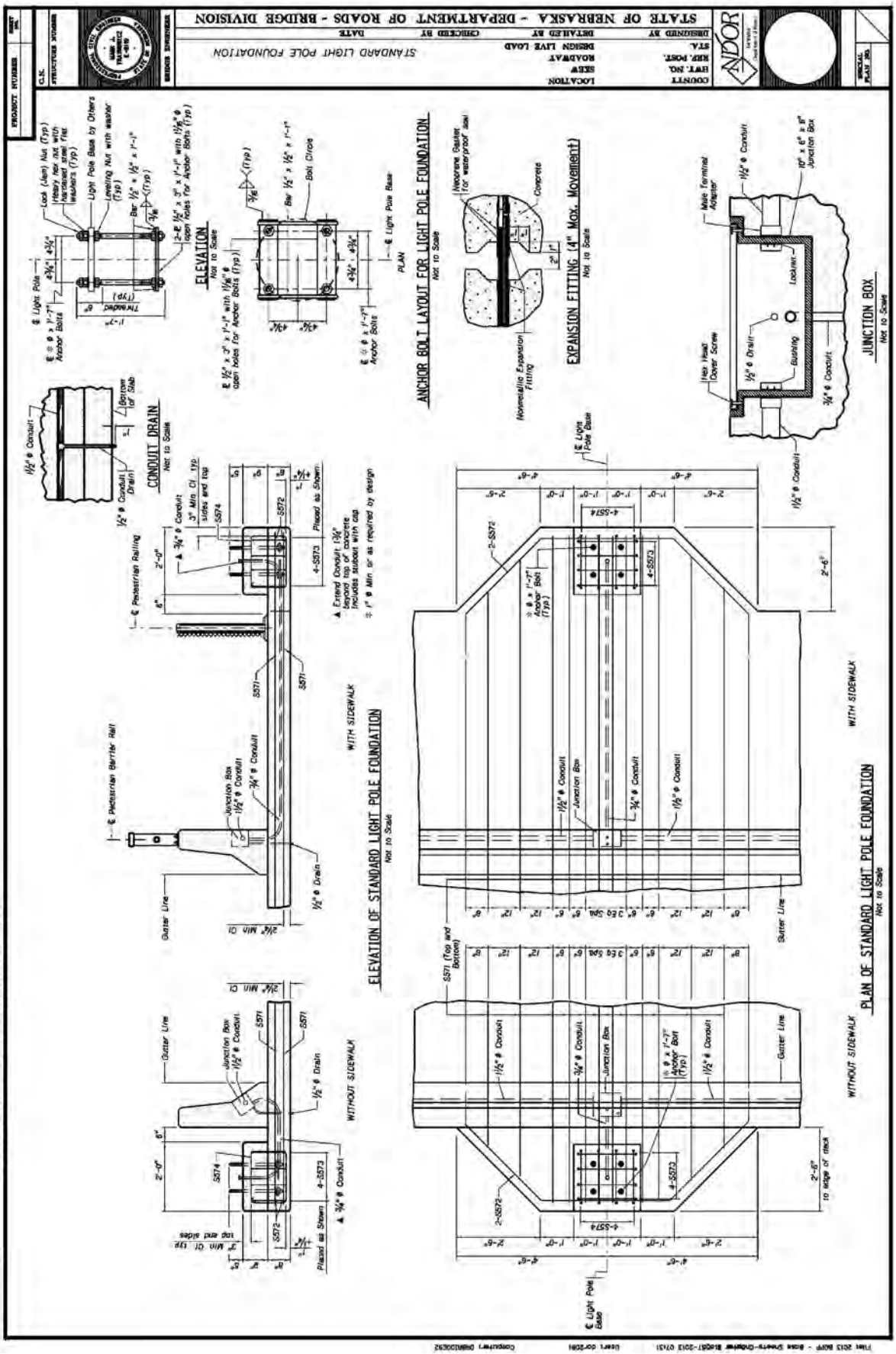
STATE OF NEBRASKA - DEPARTMENT OF ROADS - BRIDGE DIVISION
STANDARD LIGHT POLE FOUNDATION
ELEVATION
Not to Scale
PLAN
ANCHOR BOLT LAYOUT FOR LIGHT POLE FOUNDATION
Not to Scale
EXPANSION FITTING (4" Max. Movement)
Not to Scale
JUNCTION BOX
Not to Scale
CONDUIT DRAIN
Not to Scale
ELEVATION OF STANDARD LIGHT POLE FOUNDATION
Not to Scale
WITH SIDEWALK
WITHOUT SIDEWALK
PLAN OF STANDARD LIGHT POLE FOUNDATION
Not to Scale
Edge of slab does not match rail basesheet
LEVEL 50 = Concrete Rail
LEVEL 51 = 2'-8" Concrete Barrier
LEVEL 52 = 3'-6" Concrete Barrier
LEVEL 53 = 2'-10" Concrete Rail
LEVEL 54 = 3'-6" Concrete Rail
* Shown on this page

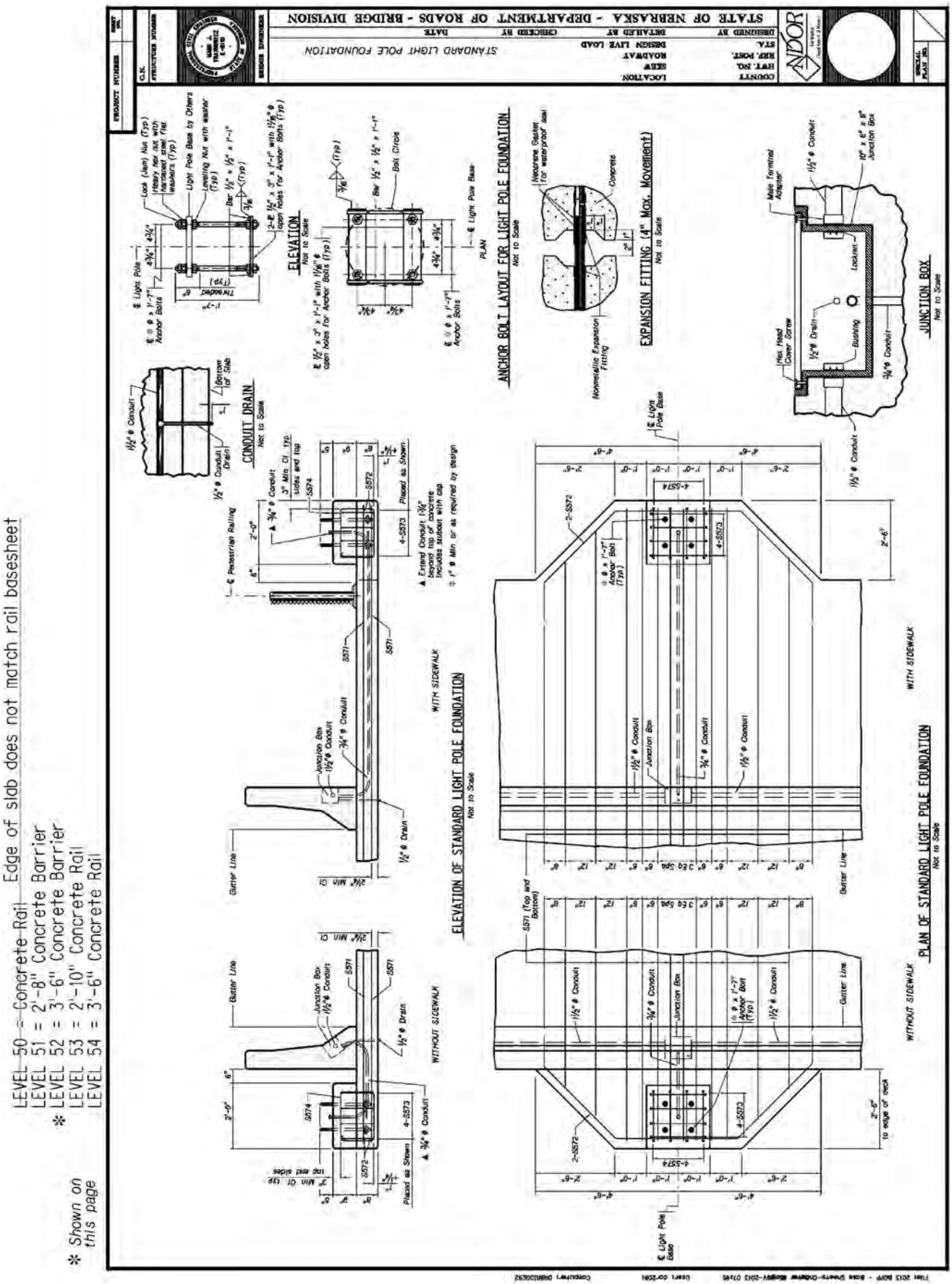
STATE OF NEBRASKA - DEPARTMENT OF ROADS - BRIDGE DIVISION
STANDARD LIGHT POLE FOUNDATION
ELEVATION
Not to Scale
PLAN
ANCHOR BOLT LAYOUT FOR LIGHT POLE FOUNDATION
Not to Scale
EXPANSION FITTING (4" Max. Movement)
Not to Scale
JUNCTION BOX
Not to Scale
CONDUIT DRAIN
Not to Scale
ELEVATION OF STANDARD LIGHT POLE FOUNDATION
Not to Scale
WITH SIDEWALK
WITHOUT SIDEWALK
PLAN OF STANDARD LIGHT POLE FOUNDATION
Not to Scale
LEVEL 50 = Concrete Rail Edge of slab does not match rail basesheet
LEVEL 51 = 2'-8" Concrete Barrier
LEVEL 52 = 3'-6" Concrete Barrier
LEVEL 53 = 2'-10" Concrete Rail
LEVEL 54 = 3'-6" Concrete Rail
* Shown on this page

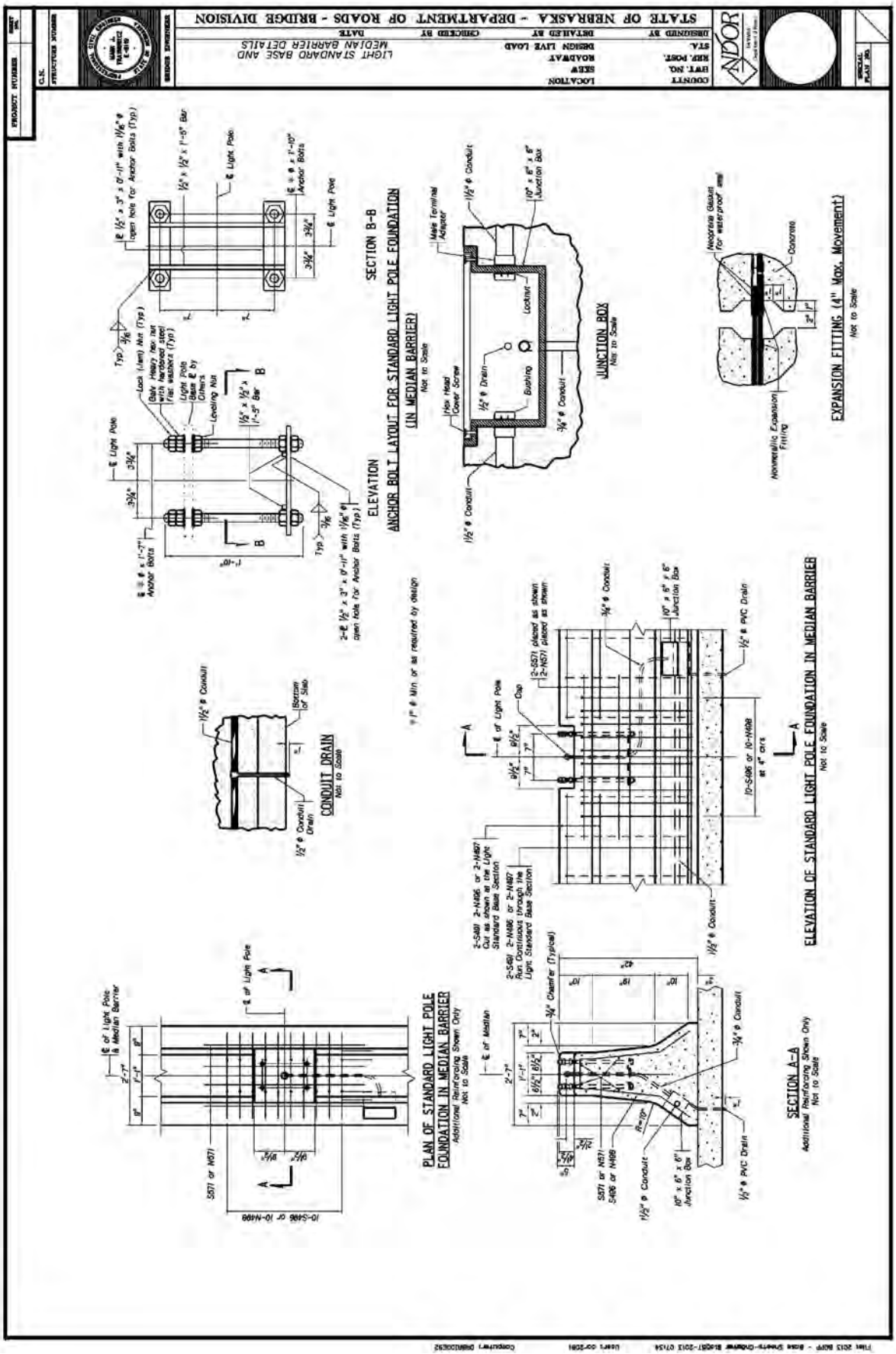

* Shown on this page

* LEVEL 52 = 3'-6" Concrete Barrier

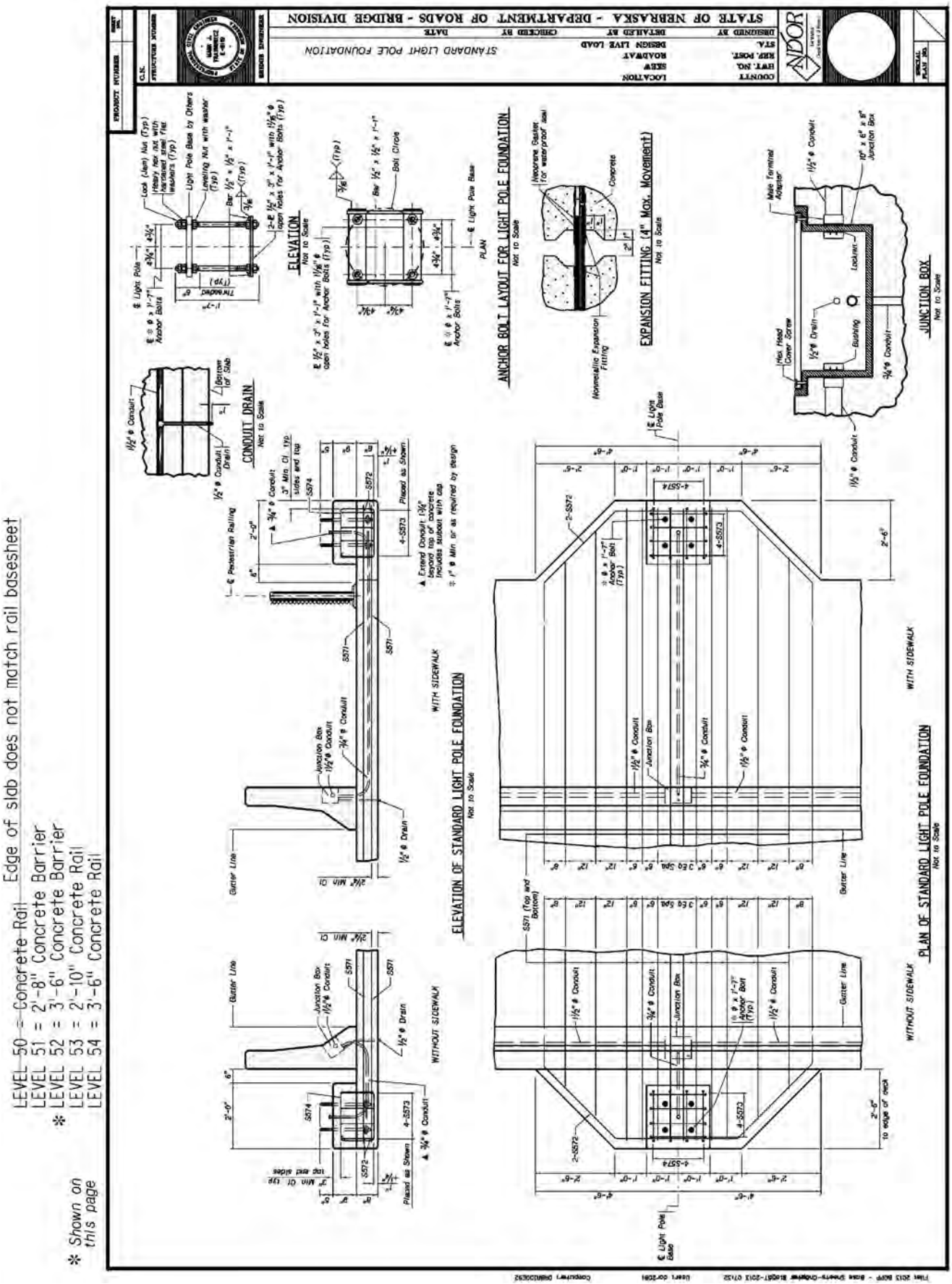
STATE OF NEBRASKA - DEPARTMENT OF ROADS - BRIDGE DIVISION
STANDARD LIGHT POLE FOUNDATION
ELEVATION
Not to Scale
PLAN
ANCHOR BOLT LAYOUT FOR LIGHT POLE FOUNDATION
Not to Scale
EXPANSION FITTING (4" Max. Movement)
Not to Scale
JUNCTION BOX
Not to Scale
CONDUIT DRAIN
Not to Scale
ELEVATION OF STANDARD LIGHT POLE FOUNDATION
Not to Scale
WITH SIDEWALK
WITHOUT SIDEWALK
PLAN OF STANDARD LIGHT POLE FOUNDATION
Not to Scale
LEVEL 50 = Concrete Rail Edge of slab does not match rail basesheet
LEVEL 51 = 2'-8" Concrete Barrier
LEVEL 52 = 3'-6" Concrete Barrier
LEVEL 53 = 2'-10" Concrete Rail
LEVEL 54 = 3'-6" Concrete Rail
* Shown on this page

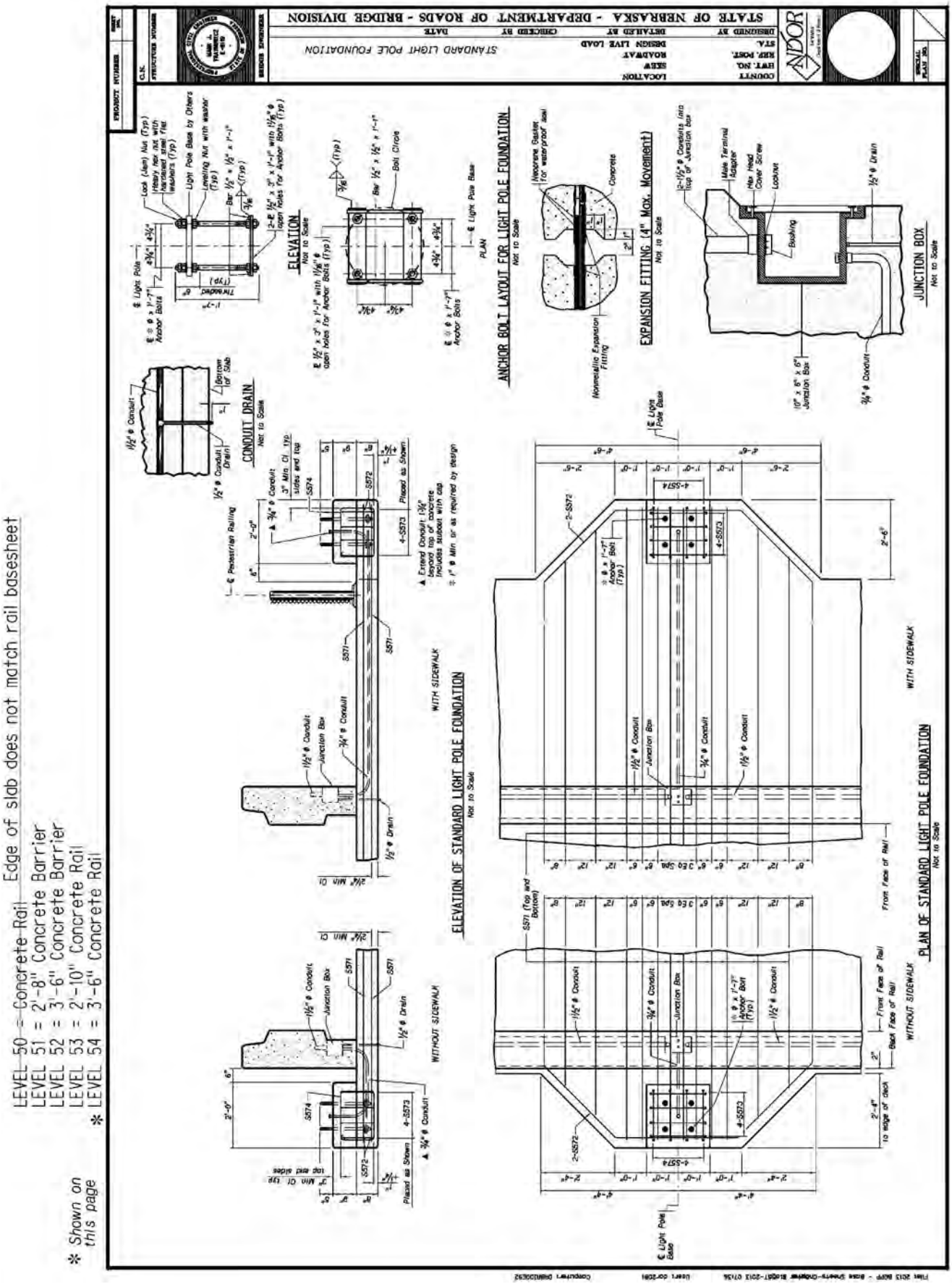
STATE OF NEBRASKA - DEPARTMENT OF ROADS - BRIDGE DIVISION
STANDARD LIGHT POLE FOUNDATION
ELEVATION
Not to Scale
PLAN
ANCHOR BOLT LAYOUT FOR LIGHT POLE FOUNDATION
Not to Scale
EXPANSION FITTING (4" Max. Movement)
Not to Scale
JUNCTION BOX
Not to Scale
CONDUIT DRAIN
Not to Scale
ELEVATION OF STANDARD LIGHT POLE FOUNDATION
Not to Scale
WITH SIDEWALK
WITHOUT SIDEWALK
PLAN OF STANDARD LIGHT POLE FOUNDATION
Not to Scale
Edge of slab does not match rail basesheet
LEVEL 50 = Concrete Rail
LEVEL 51 = 2'-8" Concrete Barrier
LEVEL 52 = 3'-6" Concrete Barrier
LEVEL 53 = 2'-10" Concrete Rail
* LEVEL 54 = 3'-6" Concrete Rail
* Shown on this page

6.2.12

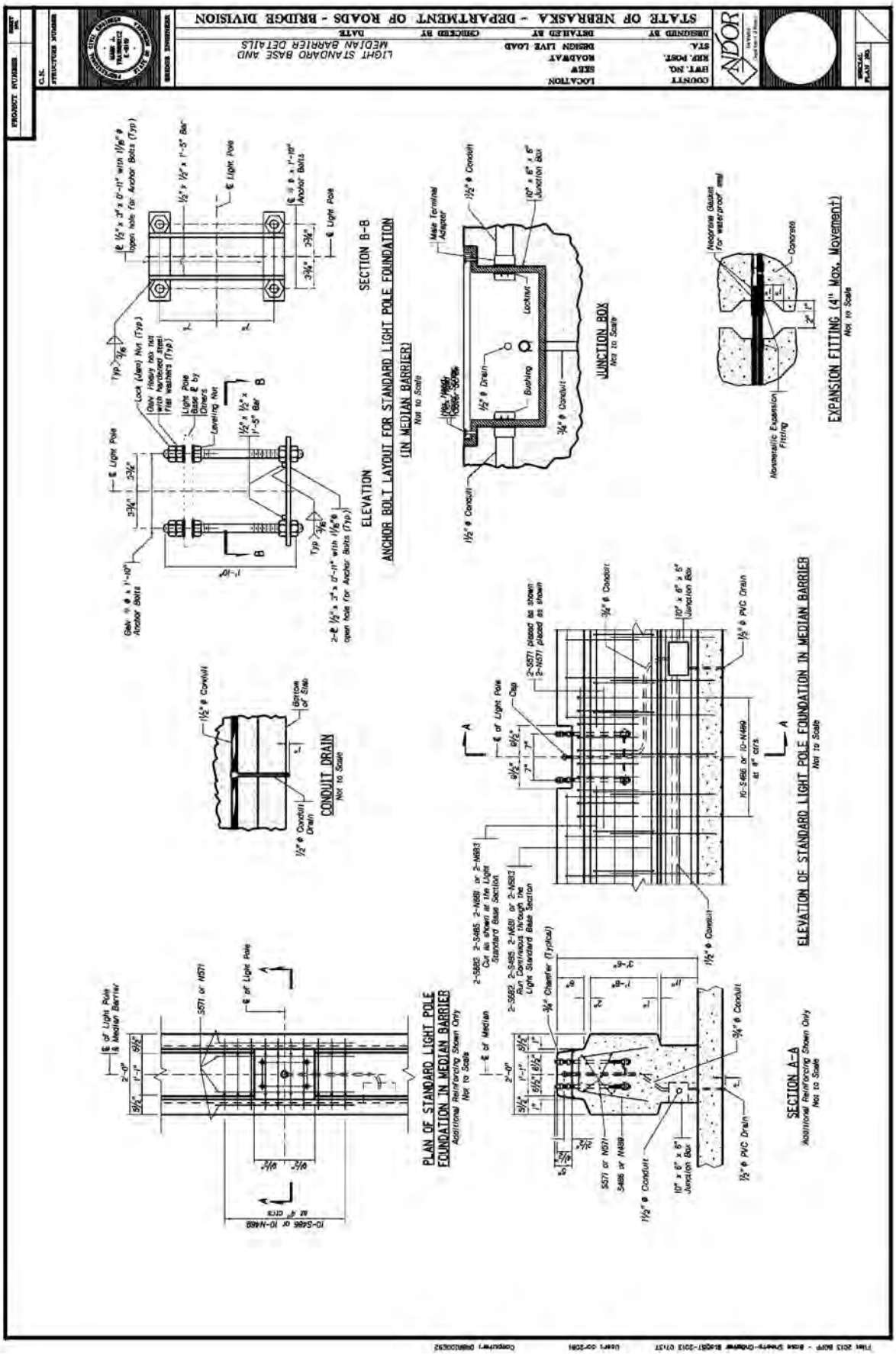
STATE OF NEBRASKA - DEPARTMENT OF ROADS - BRIDGE DIVISION
LIGHT STANDARD BASE AND MEDIAN BARRIER DETAILS
SECTION B-B
ELEVATION
ANCHOR BOLT LAYOUT FOR STANDARD LIGHT POLE FOUNDATION (IN MEDIAN BARRIER)
Not to Scale
JUNCTION BOX
Not to Scale
EXPANSION FITTING (4" Max. Movement)
Not to Scale
CONDUIT DRAIN
Not to Scale
PLAN OF STANDARD LIGHT POLE FOUNDATION IN MEDIAN BARRIER
Additional Reinforcing Shown Only
Not to Scale
ELEVATION OF STANDARD LIGHT POLE FOUNDATION IN MEDIAN BARRIER
Not to Scale
SECTION A-A
Additional Reinforcing Shown Only
Not to Scale

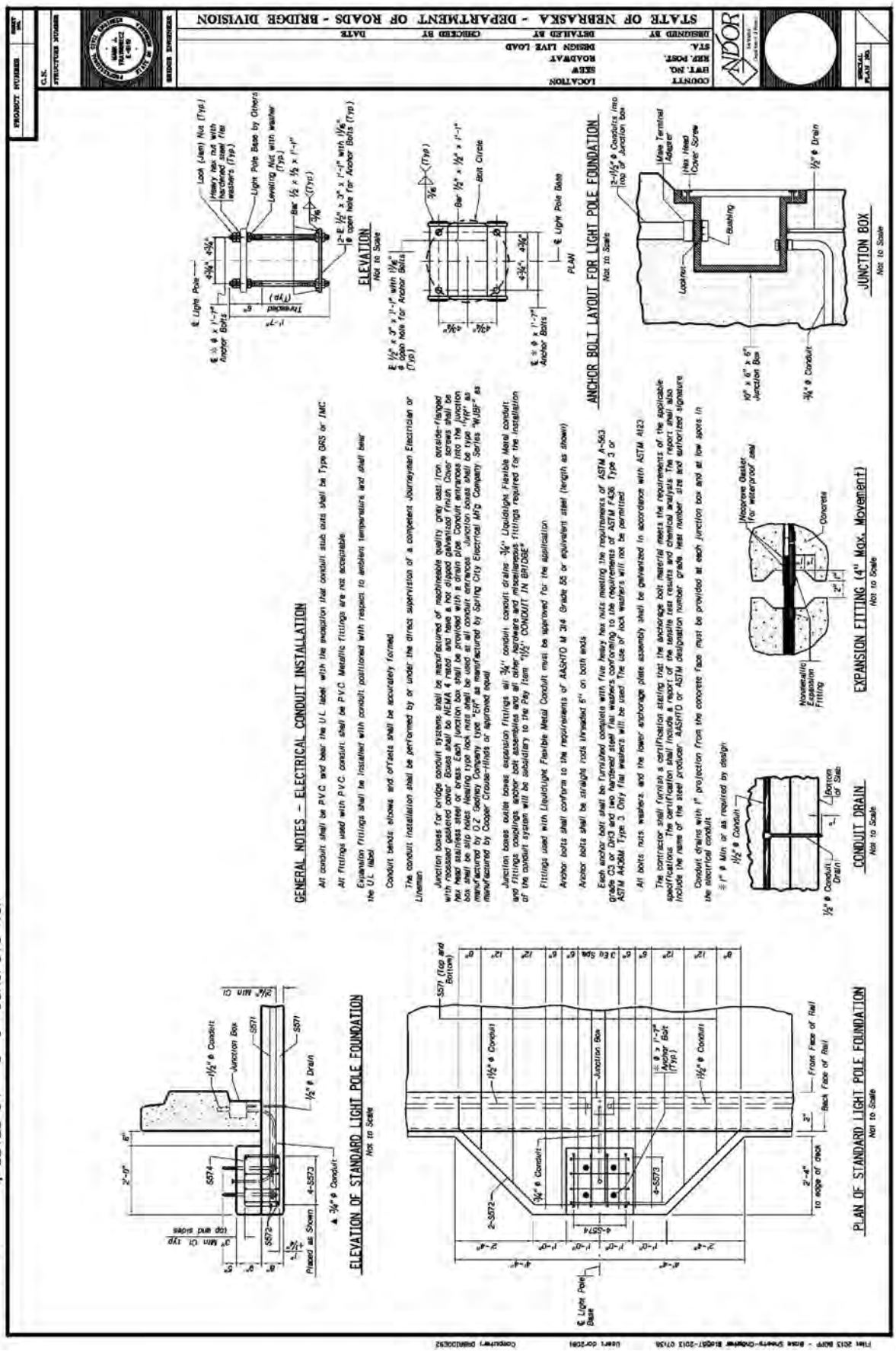
LEVEL 50 = Concrete Rail Edge of slab does not match rail basesheet
LEVEL 51 = 2'-8" Concrete Barrier
LEVEL 52 = 3'-6" Concrete Barrier
LEVEL 53 = 2'-10" Concrete Rail
* LEVEL 54 = 3'-6" Concrete Rail
* Shown on this page
STATE OF NEBRASKA - DEPARTMENT OF ROADS - BRIDGE DIVISION
GENERAL NOTES - ELECTRICAL CONDUIT INSTALLATION
ELEVATION
PLAN
ANCHOR BOLT LAYOUT FOR LIGHT POLE FOUNDATION
JUNCTION BOX
EXPANSION FITTING (4" Max. Movement)
CONDUIT DRAIN
ELEVATION OF STANDARD LIGHT POLE FOUNDATION
PLAN OF STANDARD LIGHT POLE FOUNDATION

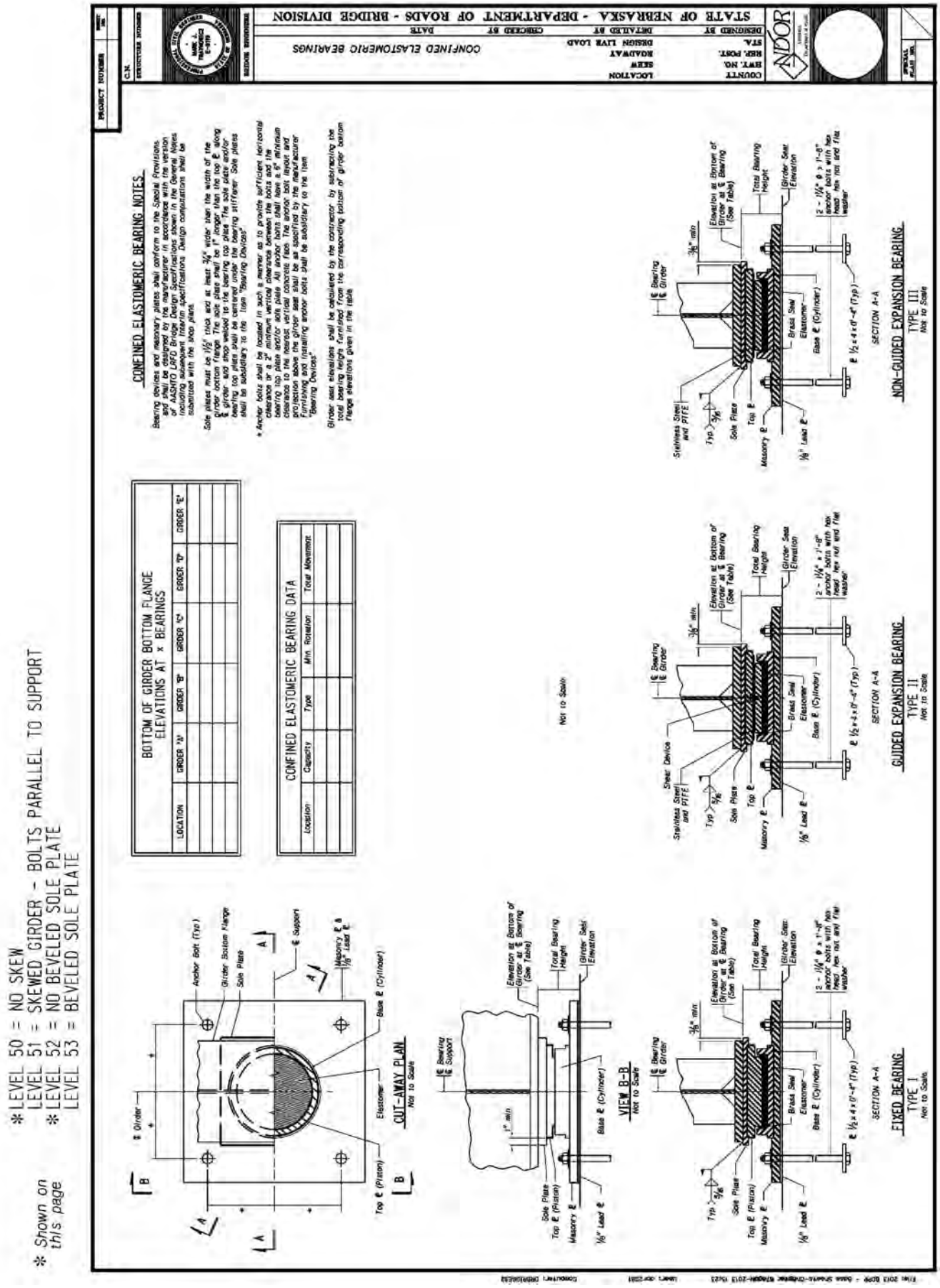
STATE OF NEBRASKA - DEPARTMENT OF ROADS - BRIDGE DIVISION
CONFINED ELASTOMERIC BEARINGS
CONFINED ELASTOMERIC BEARING NOTES
BOTTOM OF GIRDER BOTTOM FLANGE ELEVATIONS AT x BEARINGS
CONFINED ELASTOMERIC BEARING DATA
CUT-AWAY PLAN
VIEW B-B
FIXED BEARING TYPE I
GUIDED EXPANSION BEARING TYPE II
NON-GUIDED EXPANSION BEARING TYPE III
* LEVEL 50 = NO SKEW
LEVEL 51 = SKEWED GIRDER - BOLTS PARALLEL TO SUPPORT
* LEVEL 52 = NO BEVELED SOLE PLATE
LEVEL 53 = BEVELED SOLE PLATE
* Shown on this page

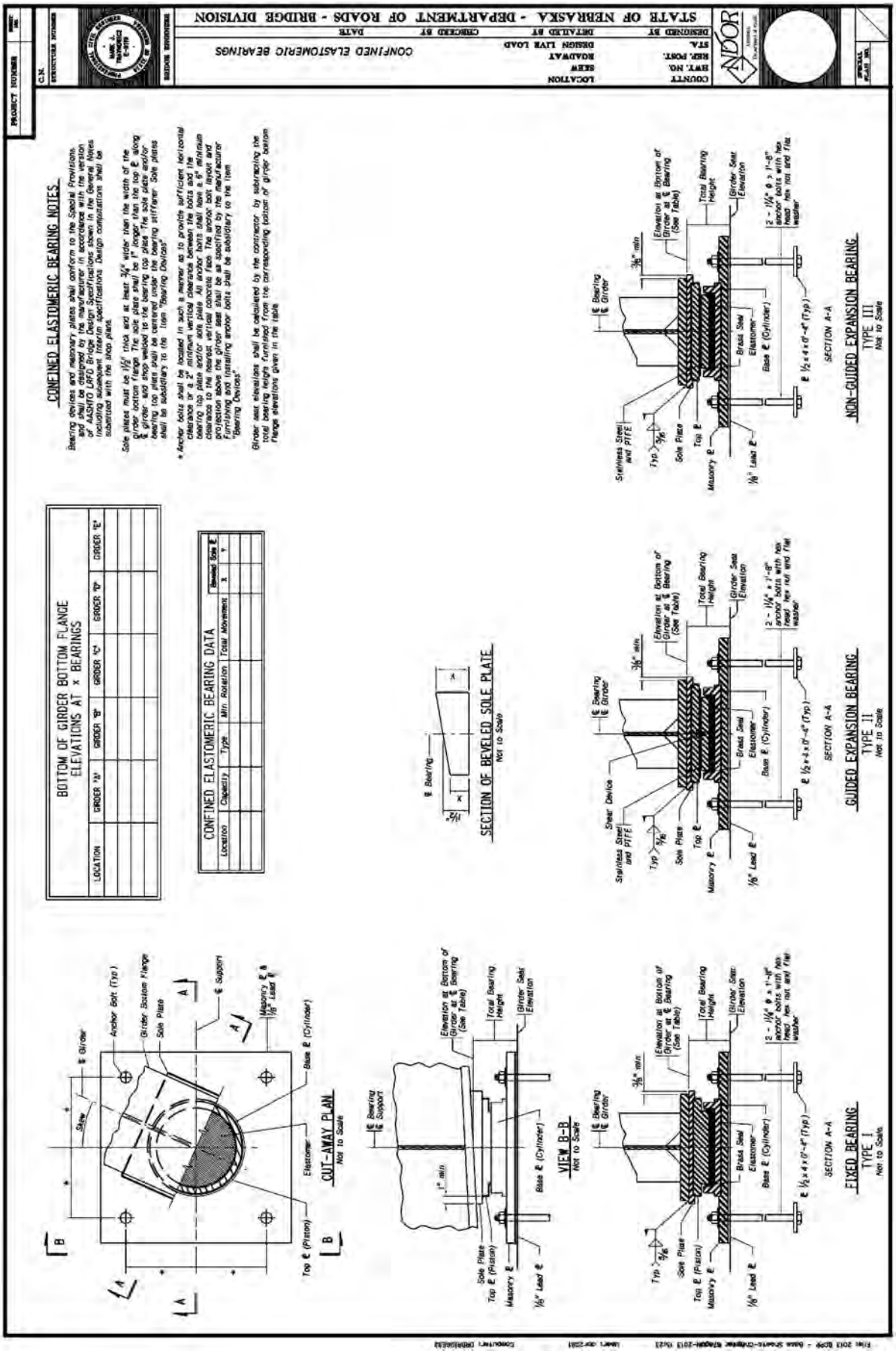
STATE OF NEBRASKA - DEPARTMENT OF ROADS - BRIDGE DIVISION
CONFINED ELASTOMERIC BEARINGS
CONFINED ELASTOMERIC BEARING NOTES
BOTTOM OF GIRDER BOTTOM FLANGE ELEVATIONS AT x BEARINGS
CONFINED ELASTOMERIC BEARING DATA
SECTION OF BEVELED SOLE PLATE
Not to Scale
CUT-AWAY PLAN
VIEW B-B
FIXED BEARING
TYPE I
GUIDED EXPANSION BEARING
TYPE II
NON-GUIDED EXPANSION BEARING
TYPE III
SECTION A-A
LEVEL 50 = NO SKEW
*LEVEL 51 = SKEWED GIRDER - BOLTS PARALLEL TO SUPPORT
LEVEL 52 = NO BEVELED SOLE PLATE
*LEVEL 53 = BEVELED SOLE PLATE
* Shown on this page

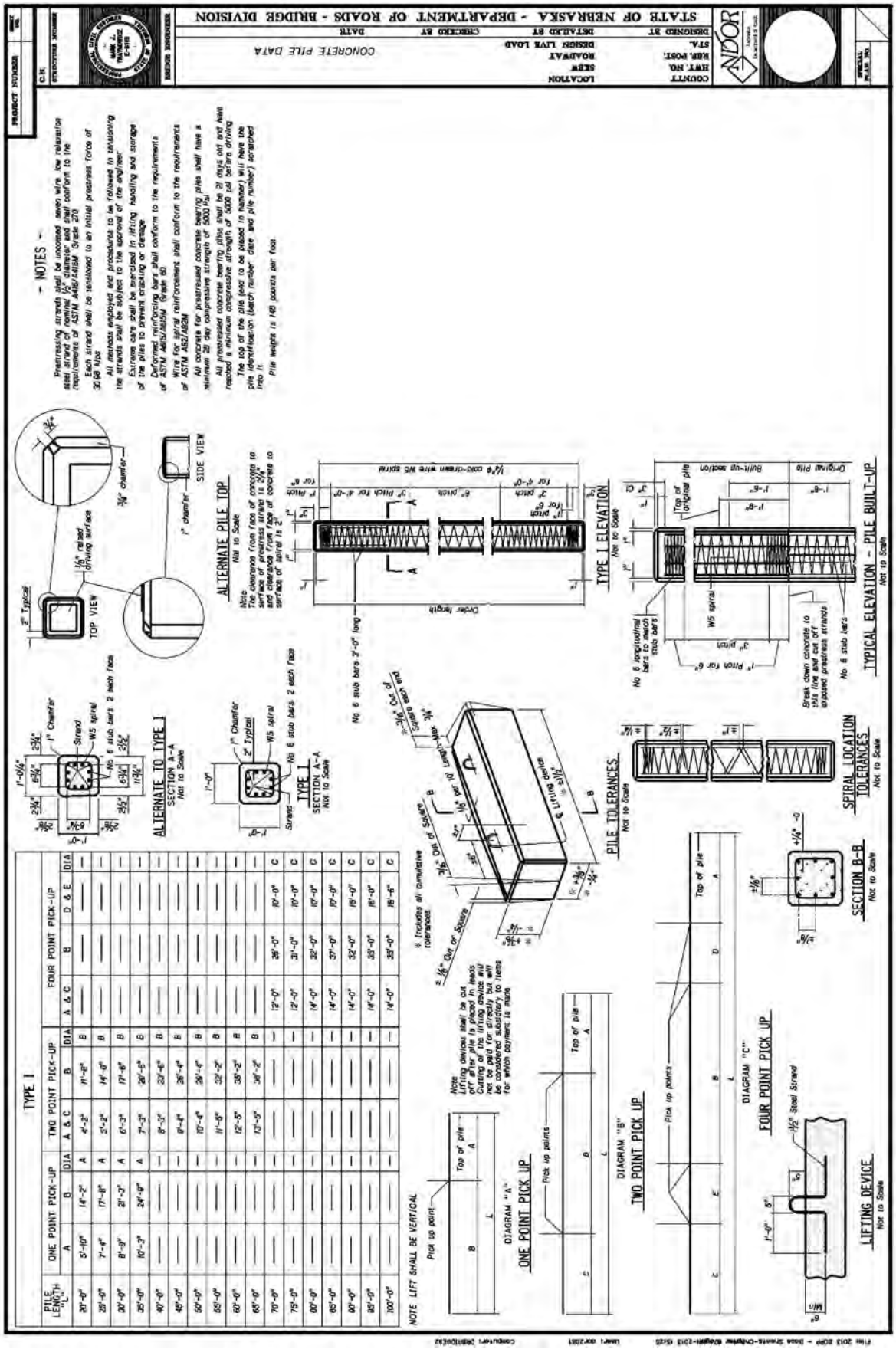
STATE OF NEBRASKA - DEPARTMENT OF ROADS - BRIDGE DIVISION
CONCRETE PILE DATA
- NOTES -
TYPICAL ELEVATION - PILE BUILT-UP
Not to Scale
TYPE I ELEVATION
ALTERNATE PILE TOP
TOP VIEW
SIDE VIEW
ALTERNATE TO TYPE I
SECTION A-A
TYPE I
SECTION A-A
PILE TOLERANCES
SPIRAL LOCATION TOLERANCES
SECTION B-B
LIFTING DEVICE
FOUR POINT PICK UP
DIAGRAM "C"
TWO POINT PICK UP
DIAGRAM "B"
ONE POINT PICK UP
DIAGRAM "A"
NOTE LIFT SHALL BE VERTICAL
TYPE I

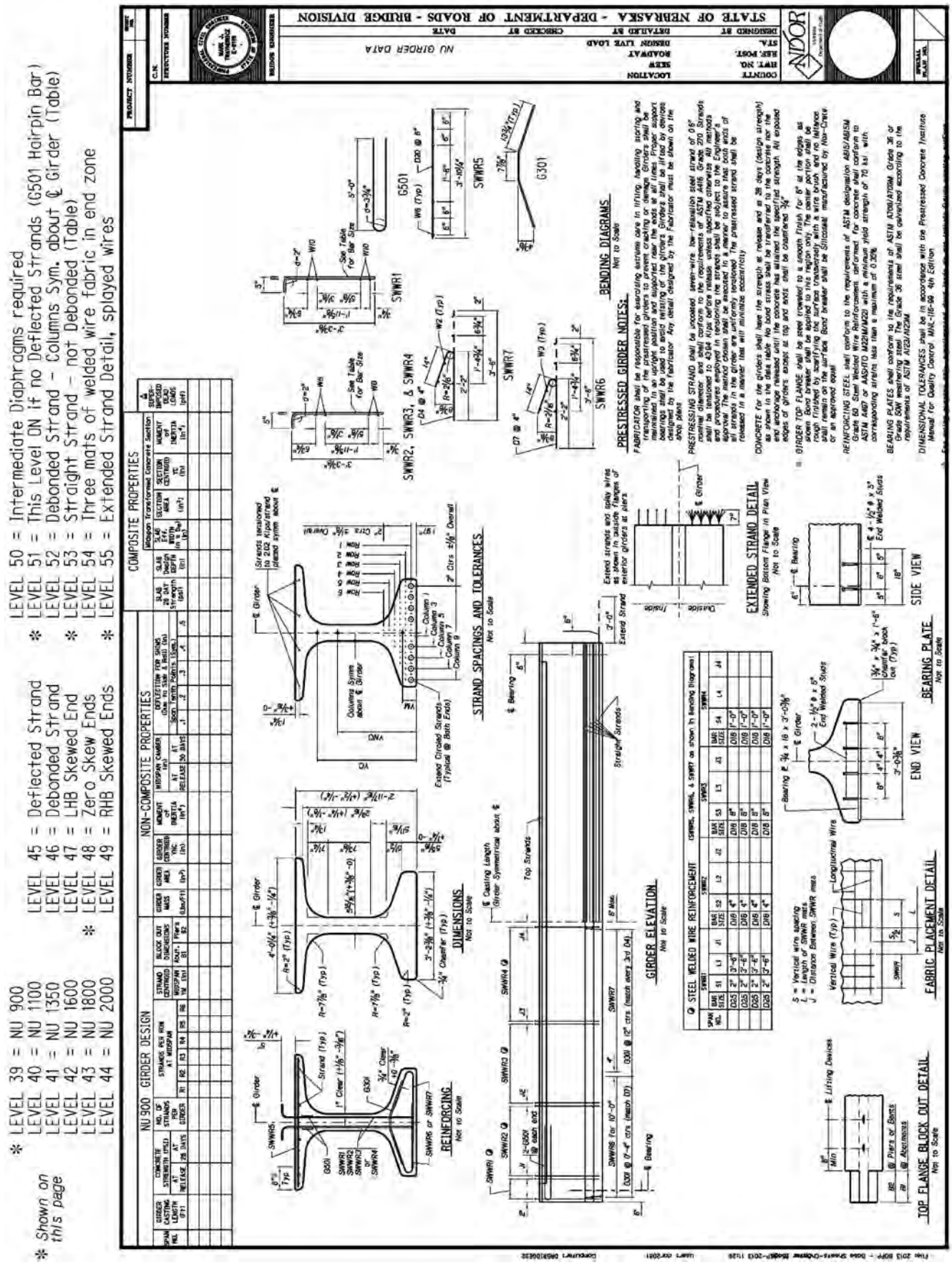
* LEVEL 39 = NU 900
LEVEL 40 = NU 1100
LEVEL 41 = NU 1350
LEVEL 42 = NU 1600
LEVEL 43 = NU 1800
LEVEL 44 = NU 2000
* Shown on this page
* LEVEL 45 = Deflected Strand
LEVEL 46 = Debonded Strand
LEVEL 47 = LHB Skewed End
LEVEL 48 = Zero Skew Ends
LEVEL 49 = RHB Skewed Ends
* LEVEL 50 = Intermediate Diaphragms required
LEVEL 51 = This Level ON if no Deflected Strands (G501 Hairpin Bar)
LEVEL 52 = Debonded Strand - Columns Sym. about ℄ Girder (Table)
LEVEL 53 = Straight Strand - not Debonded (Table)
LEVEL 54 = Three mats of welded wire fabric in end zone
LEVEL 55 = Extended Strand Detail, splayed wires
COMPOSITE PROPERTIES
NON-COMPOSITE PROPERTIES
NU 900 GIRDER DESIGN
STATE OF NEBRASKA - DEPARTMENT OF ROADS - BRIDGE DIVISION
NU GIRDER DATA
REINFORCING
Not to Scale
DIMENSIONS
Not to Scale
STRAND SPACINGS AND TOLERANCES
Not to Scale
GIRDER ELEVATION
Not to Scale
BENDING DIAGRAMS
Not to Scale
PRESTRESSED GIRDER NOTES:
EXTENDED STRAND DETAIL
Showing Bottom Flange in Plan View
Not to Scale
SIDE VIEW
BEARING PLATE
Not to Scale
END VIEW
FABRIC PLACEMENT DETAIL
Not to Scale
TOP FLANGE BLOCK OUT DETAIL
Not to Scale

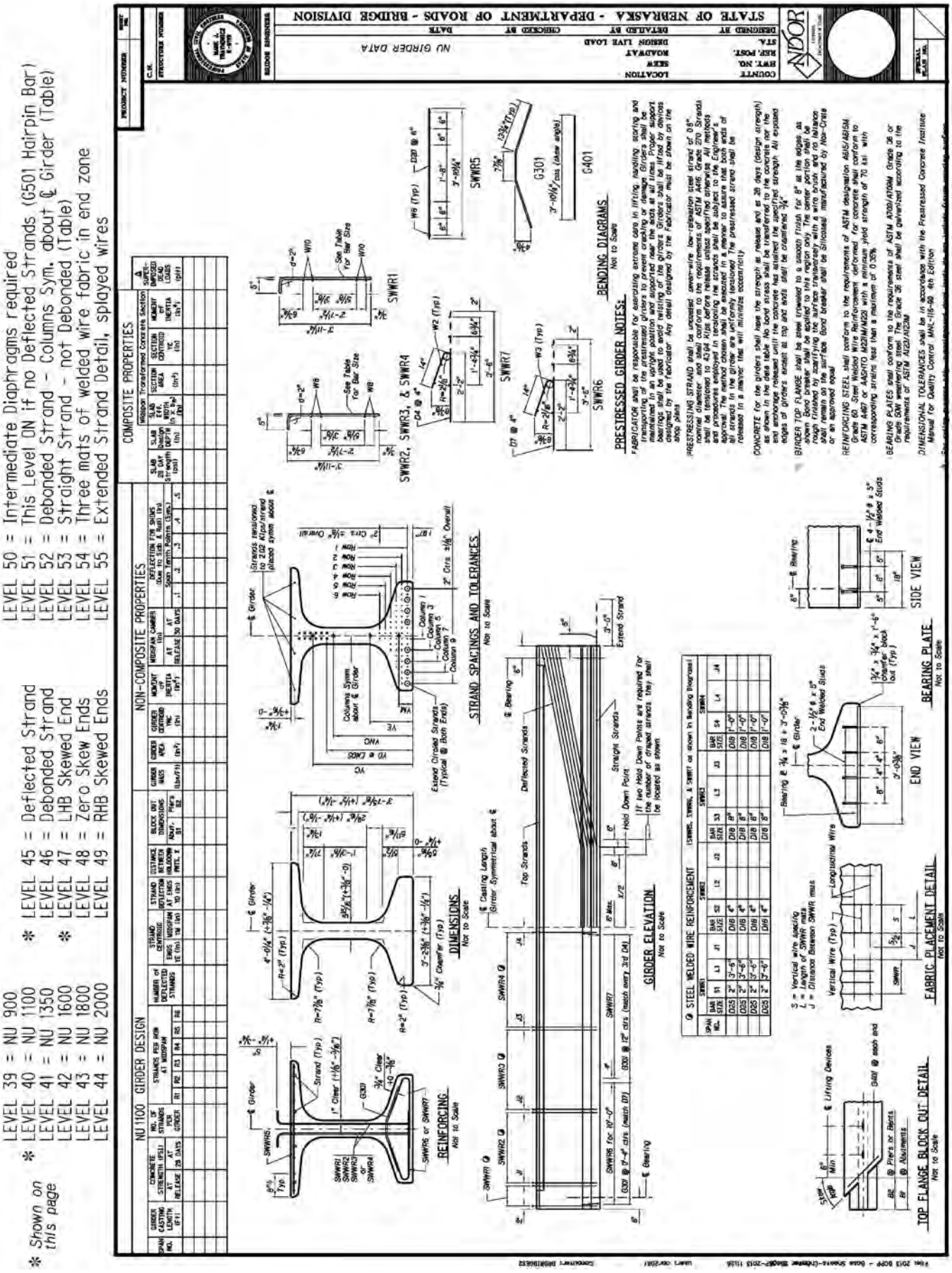
LEVEL 39 = NU 900
LEVEL 40 = NU 1100
LEVEL 41 = NU 1350
LEVEL 42 = NU 1600
LEVEL 43 = NU 1800
LEVEL 44 = NU 2000
* Shown on this page
LEVEL 45 = Deflected Strand
LEVEL 46 = Debonded Strand
LEVEL 47 = LHB Skewed End
LEVEL 48 = Zero Skew Ends
LEVEL 49 = RHB Skewed Ends
LEVEL 50 = Intermediate Diaphragms required
LEVEL 51 = This Level ON if no Deflected Strands (G501 Hairpin Bar)
LEVEL 52 = Debonded Strand - Columns Sym. about ℄ Girder (Table)
LEVEL 53 = Straight Strand - not Debonded (Table)
LEVEL 54 = Three mats of welded wire fabric in end zone
LEVEL 55 = Extended Strand Detail, splayed wires
NU 1100 GIRDER DESIGN
NON-COMPOSITE PROPERTIES
COMPOSITE PROPERTIES
REINFORCING
DIMENSIONS
STRAND SPACINGS AND TOLERANCES
GIRDER ELEVATION
TOP FLANGE BLOCK OUT DETAIL
FABRIC PLACEMENT DETAIL
BEARING PLATE
SIDE VIEW
END VIEW
BENDING DIAGRAMS
PRESTRESSED GIRDER NOTES:
STATE OF NEBRASKA - DEPARTMENT OF ROADS - BRIDGE DIVISION
NU GIRDER DATA

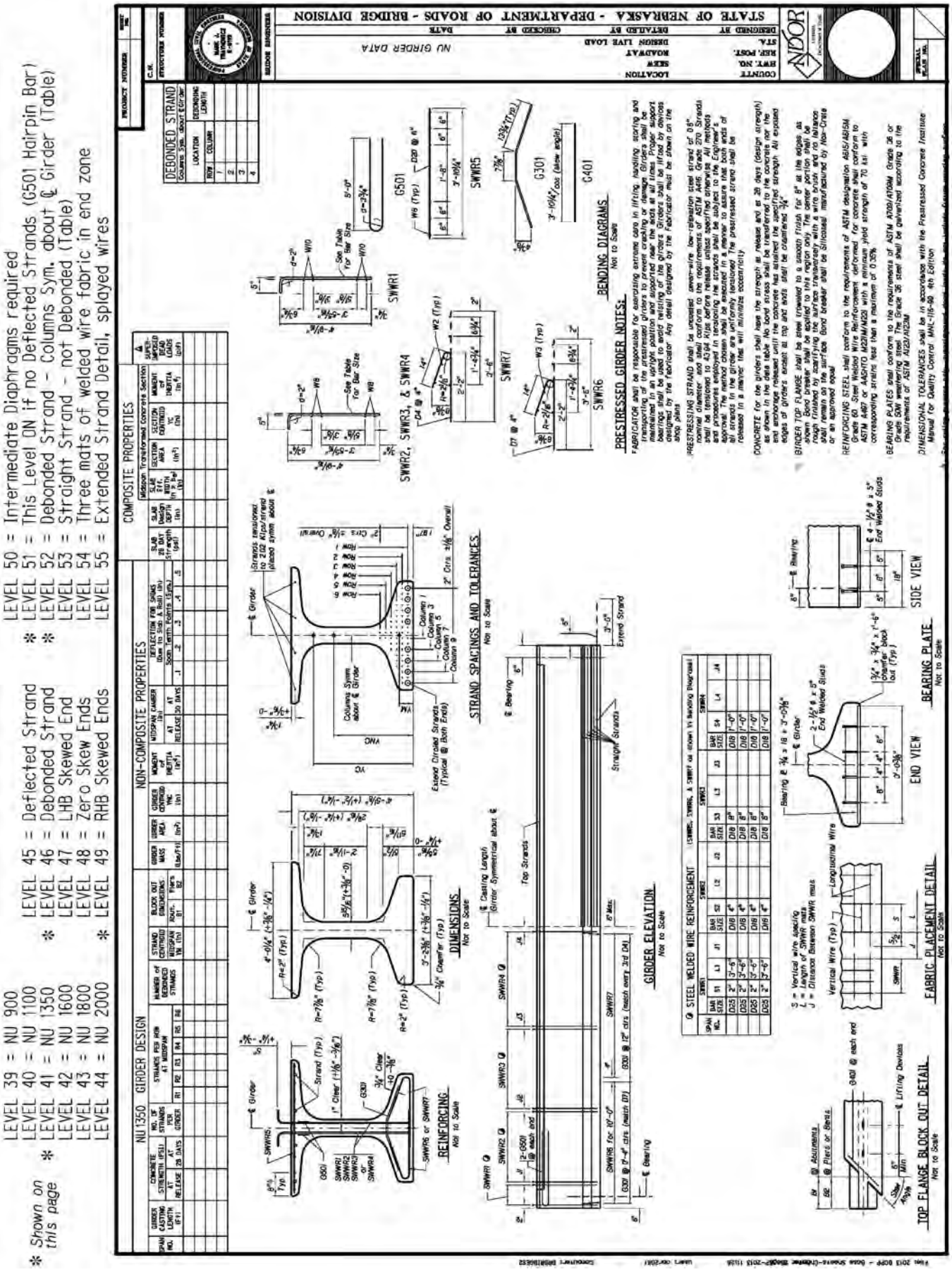
LEVEL 39 = NU 900
LEVEL 40 = NU 1100
* LEVEL 41 = NU 1350
LEVEL 42 = NU 1600
LEVEL 43 = NU 1800
LEVEL 44 = NU 2000
* Shown on this page
LEVEL 45 = Deflected Strand
LEVEL 46 = Debonded Strand
* LEVEL 47 = LHB Skewed End
LEVEL 48 = Zero Skew Ends
* LEVEL 49 = RHB Skewed Ends
LEVEL 50 = Intermediate Diaphragms required
LEVEL 51 = This Level ON if no Deflected Strands (G501 Hairpin Bar)
* LEVEL 52 = Debonded Strand - Columns Sym. about ℄ Girder (Table)
LEVEL 53 = Straight Strand - not Debonded (Table)
LEVEL 54 = Three mats of welded wire fabric in end zone
LEVEL 55 = Extended Strand Detail, splayed wires
NU 1350 GIRDER DESIGN
NON-COMPOSITE PROPERTIES
COMPOSITE PROPERTIES
DEBONDED STRAND
REINFORCING
DIMENSIONS
STRAND SPACINGS AND TOLERANCES
GIRDER ELEVATION
BENDING DIAGRAMS
PRESTRESSED GIRDER NOTES:
SIDE VIEW
END VIEW
BEARING PLATE
FABRIC PLACEMENT DETAIL
TOP FLANGE BLOCK OUT DETAIL
STATE OF NEBRASKA - DEPARTMENT OF ROADS - BRIDGE DIVISION
NU GIRDER DATA

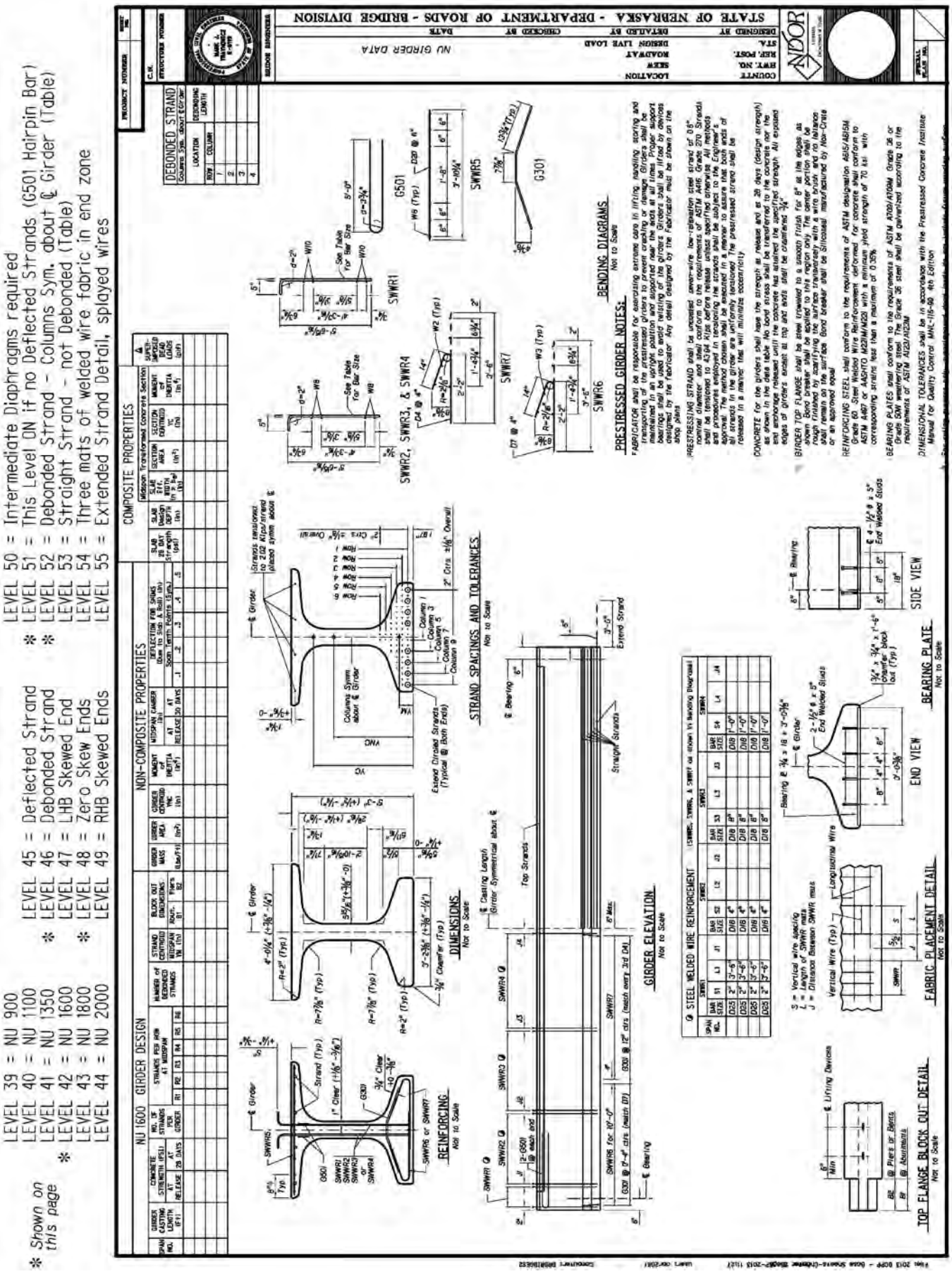
LEVEL 39 = NU 900
LEVEL 40 = NU 1100
LEVEL 41 = NU 1350
LEVEL 42 = NU 1600
LEVEL 43 = NU 1800
LEVEL 44 = NU 2000
* Shown on this page
LEVEL 45 = Deflected Strand
LEVEL 46 = Debonded Strand
LEVEL 47 = LHB Skewed End
LEVEL 48 = Zero Skew Ends
LEVEL 49 = RHB Skewed Ends
LEVEL 50 = Intermediate Diaphragms required
LEVEL 51 = This Level ON if no Deflected Strands (G501 Hairpin Bar)
LEVEL 52 = Debonded Strand - Columns Sym. about ℄ Girder (Table)
LEVEL 53 = Straight Strand - not Debonded (Table)
LEVEL 54 = Three mats of welded wire fabric in end zone
LEVEL 55 = Extended Strand Detail, splayed wires
NU 1600 GIRDER DESIGN
NON-COMPOSITE PROPERTIES
COMPOSITE PROPERTIES
DEBONDED STRAND
REINFORCING
DIMENSIONS
STRAND SPACINGS AND TOLERANCES
GIRDER ELEVATION
TOP FLANGE BLOCK OUT DETAIL
FABRIC PLACEMENT DETAIL
END VIEW
SIDE VIEW
BEARING PLATE
BENDING DIAGRAMS
PRESTRESSED GIRDER NOTES:
STATE OF NEBRASKA - DEPARTMENT OF ROADS - BRIDGE DIVISION
NU GIRDER DATA

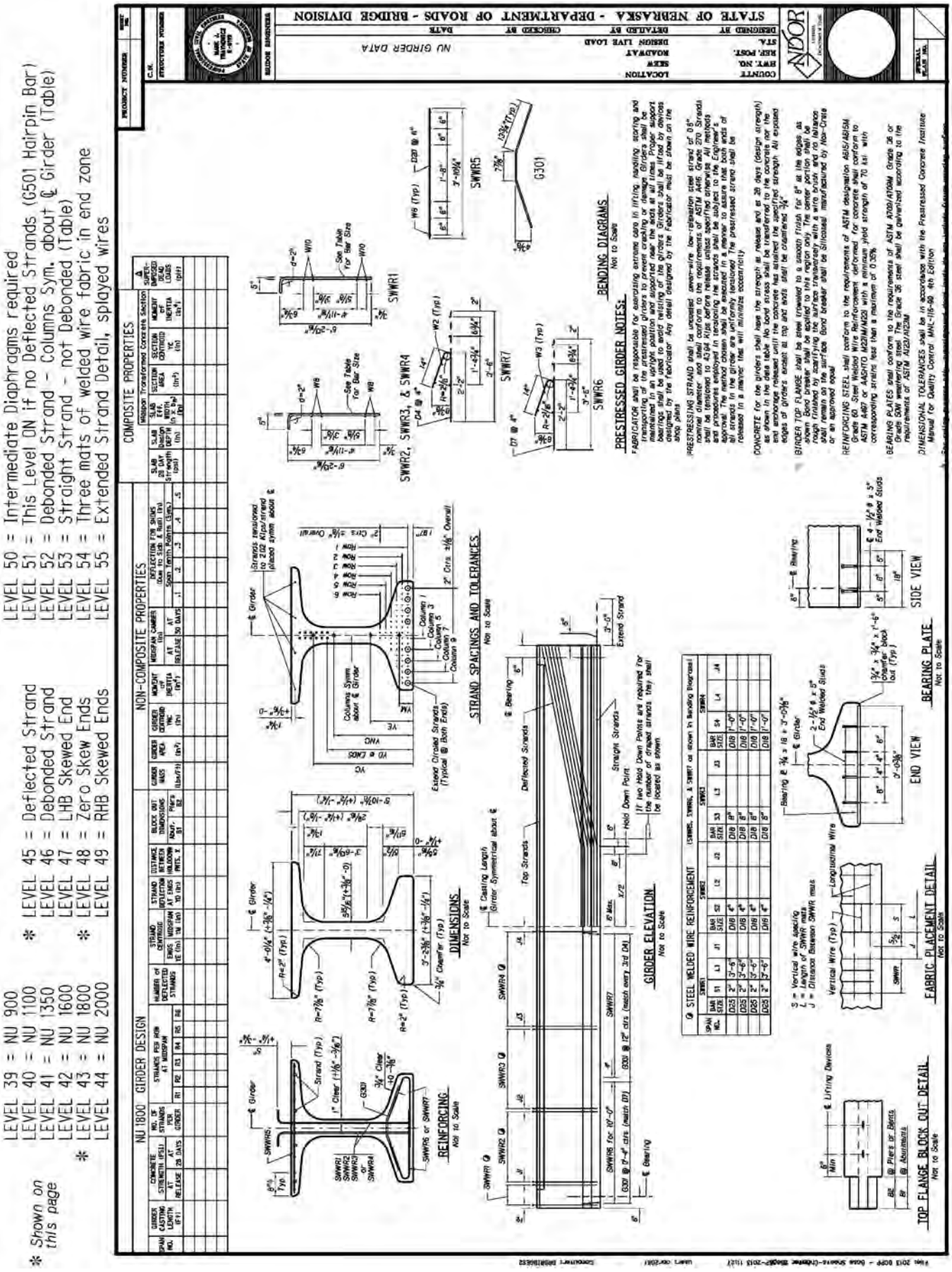
LEVEL 39 = NU 900
LEVEL 40 = NU 1100
LEVEL 41 = NU 1350
LEVEL 42 = NU 1600
LEVEL 43 = NU 1800
LEVEL 44 = NU 2000
* Shown on this page
* LEVEL 45 = Deflected Strand
LEVEL 46 = Debonded Strand
LEVEL 47 = LHB Skewed End
* LEVEL 48 = Zero Skew Ends
LEVEL 49 = RHB Skewed Ends
LEVEL 50 = Intermediate Diaphragms required
LEVEL 51 = This Level ON if no Deflected Strands (G501 Hairpin Bar)
LEVEL 52 = Debonded Strand - Columns Sym. about ℄ Girder (Table)
LEVEL 53 = Straight Strand - not Debonded (Table)
LEVEL 54 = Three mats of welded wire fabric in end zone
LEVEL 55 = Extended Strand Detail, splayed wires
NU 1800 GIRDER DESIGN
NON-COMPOSITE PROPERTIES
COMPOSITE PROPERTIES
REINFORCING
DIMENSIONS
STRAND SPACINGS AND TOLERANCES
GIRDER ELEVATION
TOP FLANGE BLOCK OUT DETAIL
FABRIC PLACEMENT DETAIL
BEARING PLATE
SIDE VIEW
END VIEW
BENDING DIAGRAMS
PRESTRESSED GIRDER NOTES:
STATE OF NEBRASKA - DEPARTMENT OF ROADS - BRIDGE DIVISION
NU GIRDER DATA

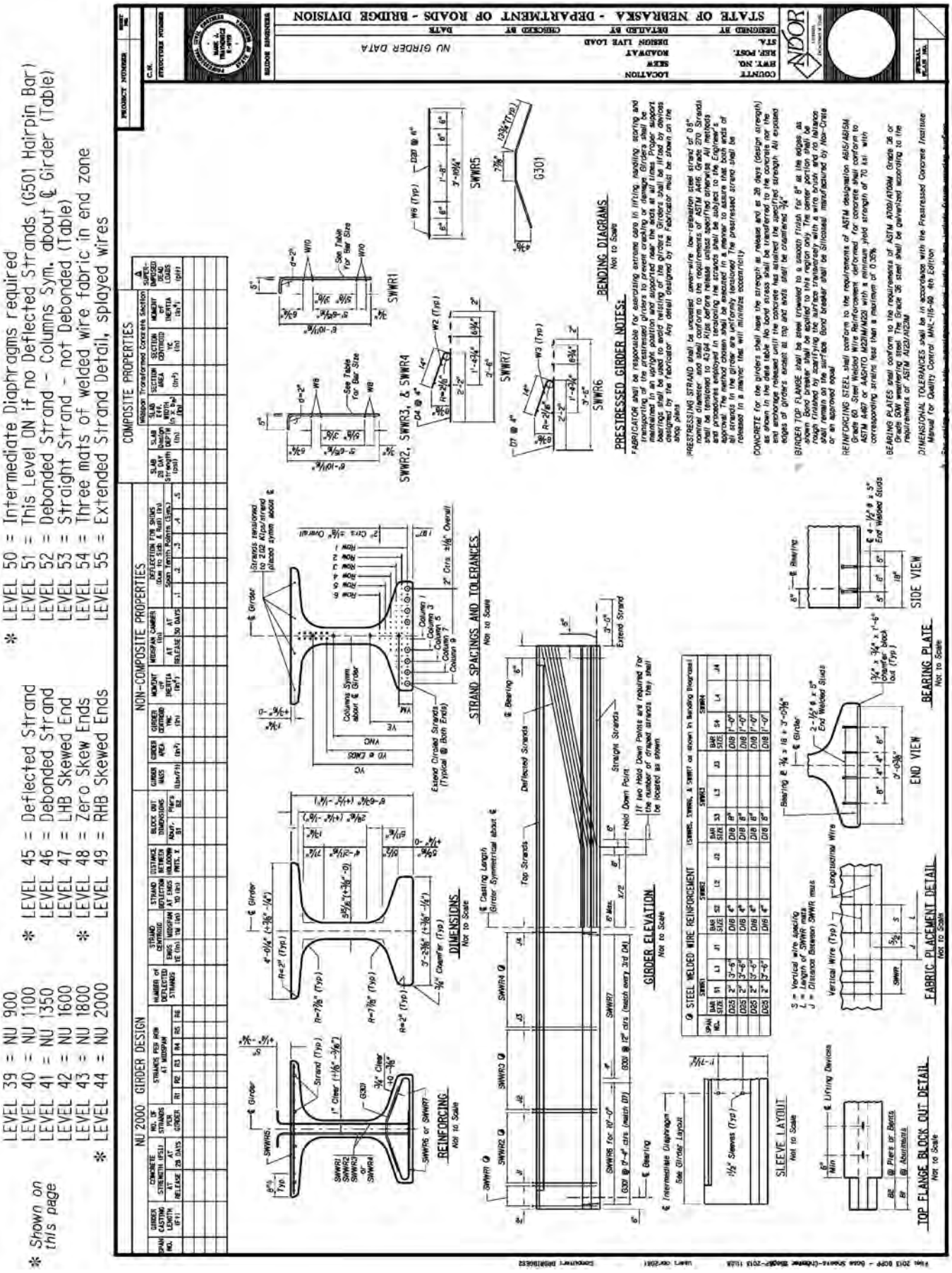
LEVEL 39 = NU 900
LEVEL 40 = NU 1100
LEVEL 41 = NU 1350
LEVEL 42 = NU 1600
LEVEL 43 = NU 1800
LEVEL 44 = NU 2000
* Shown on this page
* LEVEL 45 = Deflected Strand
LEVEL 46 = Debonded Strand
LEVEL 47 = LHB Skewed End
LEVEL 48 = Zero Skew Ends
LEVEL 49 = RHB Skewed Ends
* LEVEL 50 = Intermediate Diaphragms required
LEVEL 51 = This Level ON if no Deflected Strands (G501 Hairpin Bar)
LEVEL 52 = Debonded Strand - Columns Sym. about ℄ Girder (Table)
LEVEL 53 = Straight Strand - not Debonded (Table)
LEVEL 54 = Three mats of welded wire fabric in end zone
LEVEL 55 = Extended Strand Detail, splayed wires
NU 2000 GIRDER DESIGN
COMPOSITE PROPERTIES
NON-COMPOSITE PROPERTIES
REINFORCING
DIMENSIONS
STRAND SPACINGS AND TOLERANCES
GIRDER ELEVATION
SLEEVE LAYOUT
FABRIC PLACEMENT DETAIL
TOP FLANGE BLOCK OUT DETAIL
BEARING PLATE
SIDE VIEW
END VIEW
BENDING DIAGRAMS
PRESTRESSED GIRDER NOTES:
STATE OF NEBRASKA - DEPARTMENT OF ROADS - BRIDGE DIVISION
NU GIRDER DATA

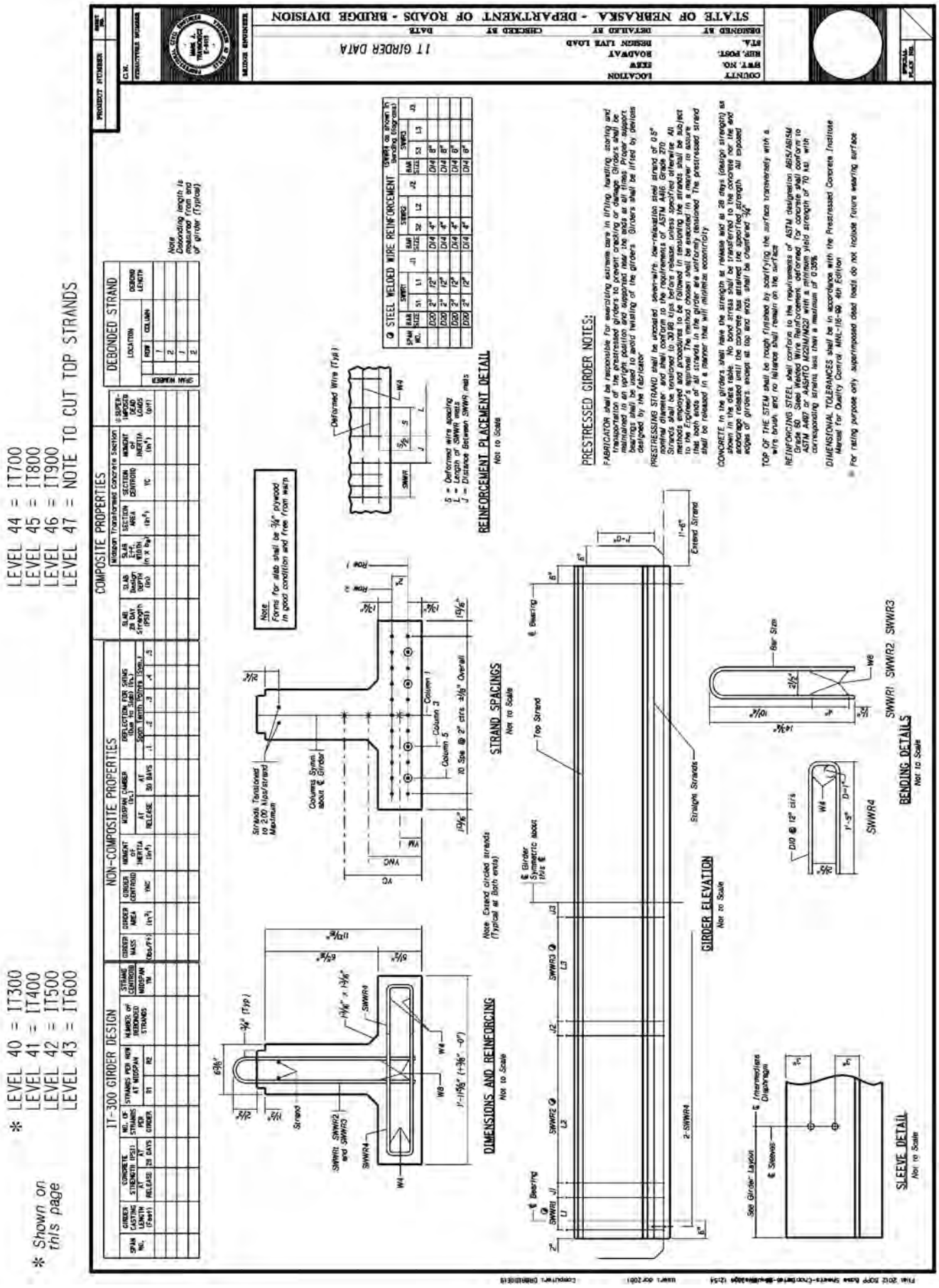
STATE OF NEBRASKA - DEPARTMENT OF ROADS - BRIDGE DIVISION
IT GIRDER DATA
LEVEL 44 = IT700
LEVEL 45 = IT800
LEVEL 46 = IT900
LEVEL 47 = NOTE TO CUT TOP STRANDS
* LEVEL 40 = IT300
LEVEL 41 = IT400
LEVEL 42 = IT500
LEVEL 43 = IT600
* Shown on this page
COMPOSITE PROPERTIES
DEBONDED STRAND
IT-300 GIRDER DESIGN
NON-COMPOSITE PROPERTIES
STEEL WELDED WIRE REINFORCEMENT
PRESTRESSED GIRDER NOTES:
REINFORCEMENT PLACEMENT DETAIL
STRAND SPACINGS
DIMENSIONS AND REINFORCING
GIRDER ELEVATION
BENDING DETAILS
SLEEVE DETAIL

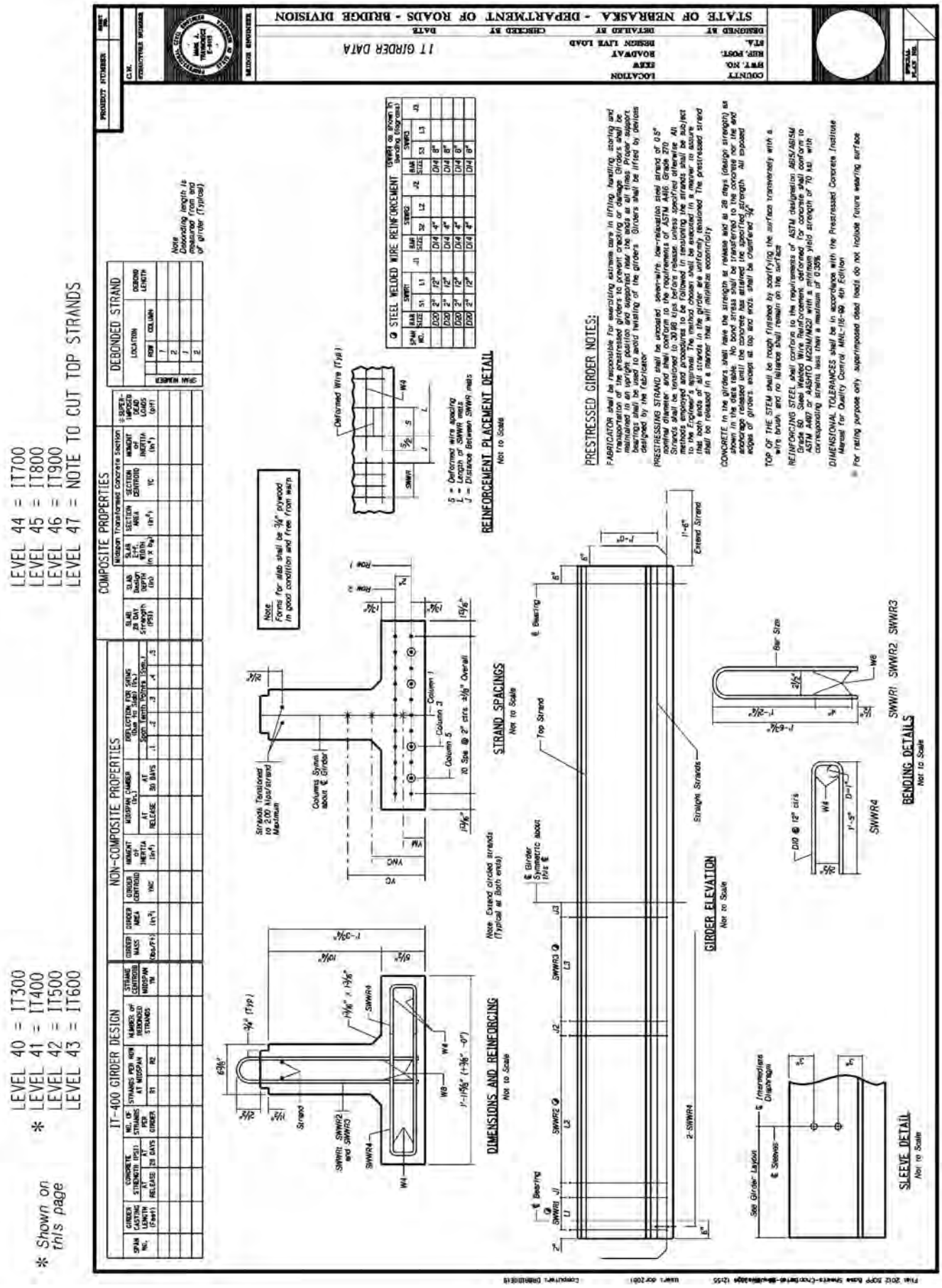
STATE OF NEBRASKA - DEPARTMENT OF ROADS - BRIDGE DIVISION
IT GIRDER DATA
IT-400 GIRDER DESIGN
NON-COMPOSITE PROPERTIES
COMPOSITE PROPERTIES
DEBONDED STRAND
LEVEL 40 = IT300
LEVEL 41 = IT400
LEVEL 42 = IT500
LEVEL 43 = IT600
LEVEL 44 = IT700
LEVEL 45 = IT800
LEVEL 46 = IT900
LEVEL 47 = NOTE TO CUT TOP STRANDS
* Shown on this page
REINFORCEMENT PLACEMENT DETAIL
STRAND SPACINGS
DIMENSIONS AND REINFORCING
GIRDER ELEVATION
BENDING DETAILS
SLEEVE DETAIL
PRESTRESSED GIRDER NOTES:

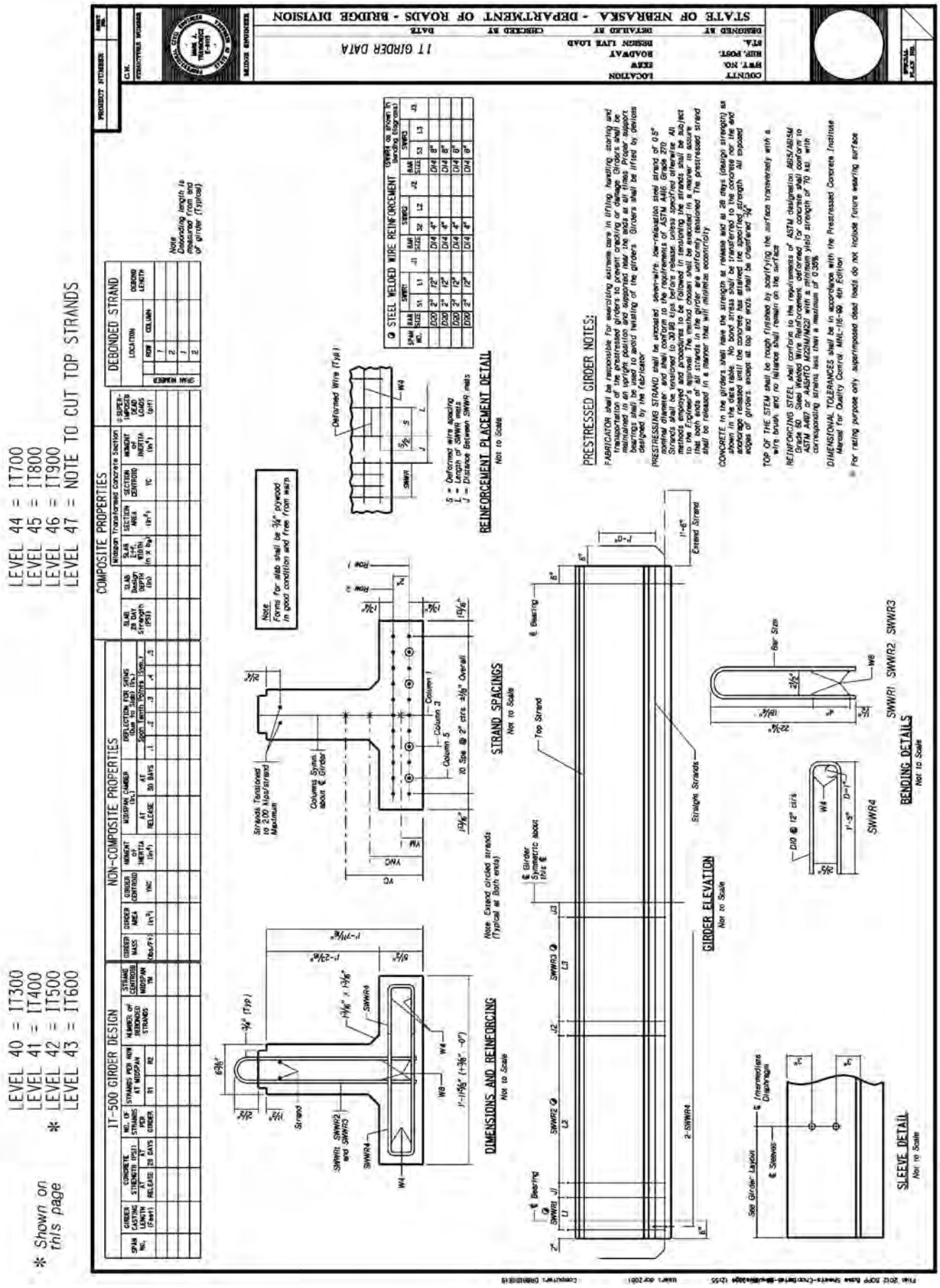
LEVEL 40 = IT300
LEVEL 41 = IT400
* LEVEL 42 = IT500
LEVEL 43 = IT600
* Shown on this page
LEVEL 44 = IT700
LEVEL 45 = IT800
LEVEL 46 = IT900
LEVEL 47 = NOTE TO CUT TOP STRANDS
IT-500 GIRDER DESIGN
NON-COMPOSITE PROPERTIES
COMPOSITE PROPERTIES
DEBONDED STRAND
Note Debonding length is measured from end of girder (Typical)
Note Forms for slab shall be 3/4" plywood in good condition and free from warp
Deformed Wire (Typ.)
S = Deformed wire spacing
L = Length of SWWR mats
J = Distance between SWWR mats
REINFORCEMENT PLACEMENT DETAIL
Not to Scale
STRAND SPACINGS
Not to Scale
Note Extend circled strands (Typical at both ends)
DIMENSIONS AND REINFORCING
Not to Scale
GIRDER ELEVATION
Not to Scale
BENDING DETAILS
Not to Scale
SLEEVE DETAIL
Not to Scale
PRESTRESSED GIRDER NOTES:
FABRICATOR shall be responsible for exercising extreme care in lifting, handling, storing and transporting of the prestressed girders to prevent cracking or damage. Girders shall be transported in an upright position and supported at points near the bearings. Proper support devices designed by the fabricator
PRESTRESSING STRAND shall be uncoated seven-wire, low-relaxation steel strand of 0.5" nominal diameter and shall conform to the requirements of ASTM A416, Grade 270. All methods employed and procedures to be followed in tensioning the strands shall be subject to the Engineer's approval. The method chosen shall be executed in a manner to assure that both ends of all strands in the girder are uniformly tensioned. The prestressed strand shall be released in a manner that will minimize eccentricity.
CONCRETE in the girders shall have the strength at release and at 28 days (design strength) as shown in the data table. No bond stress shall be transferred to the concrete nor the end anchorage released until the concrete has attained the specified strength. All exposed edges of girders, except at top and ends, shall be chamfered 3/4".
TOP OF THE STEM shall be rough finished by scarifying the surface transversely with a wire brush and no laitance shall remain on the surface
REINFORCING STEEL shall conform to the requirements of ASTM designation A615/A615M Grade 60. Steel Welded Wire Reinforcement, deformed for concrete shall conform to ASTM A497 or AASHTO M221M/M221 with a minimum yield strength of 70 ksi with corresponding strains less than a maximum of 0.35%
DIMENSIONAL TOLERANCES shall be in accordance with the Prestressed Concrete Institute Manual for Quality Control, MNL-116-99 4th Edition
* For rating purpose only superimposed dead loads do not include future wearing surface
STATE OF NEBRASKA - DEPARTMENT OF ROADS - BRIDGE DIVISION
IT GIRDER DATA

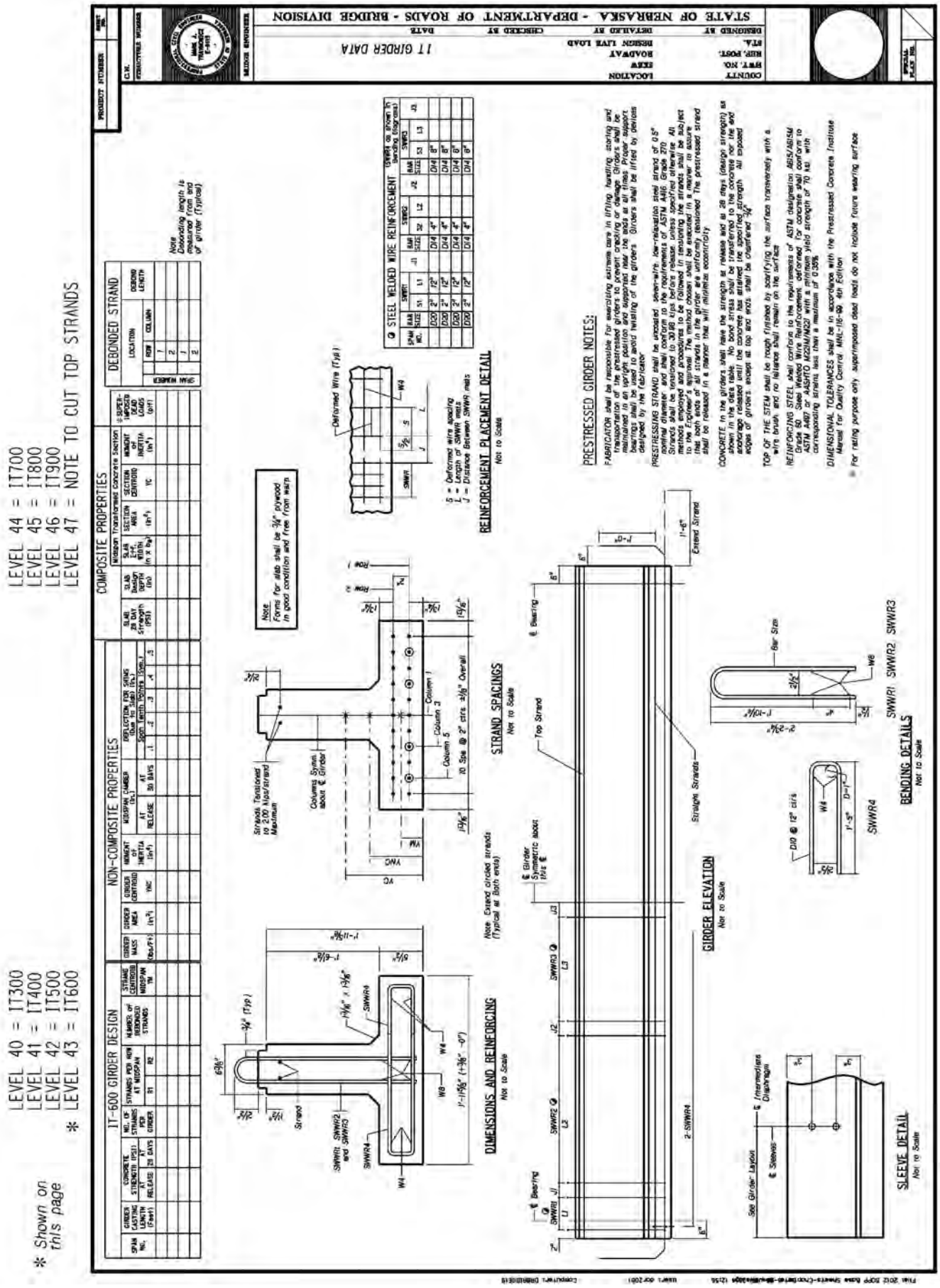
LEVEL 40 = IT300
LEVEL 41 = IT400
LEVEL 42 = IT500
LEVEL 43 = IT600
* LEVEL 44 = IT700
LEVEL 45 = IT800
LEVEL 46 = IT900
LEVEL 47 = NOTE TO CUT TOP STRANDS
* Shown on this page
IT-600 GIRDER DESIGN
NON-COMPOSITE PROPERTIES
COMPOSITE PROPERTIES
DEBONDED STRAND
STATE OF NEBRASKA - DEPARTMENT OF ROADS - BRIDGE DIVISION
IT GIRDER DATA
DIMENSIONS AND REINFORCING
Not to Scale
STRAND SPACINGS
Not to Scale
REINFORCEMENT PLACEMENT DETAIL
Not to Scale
PRESTRESSED GIRDER NOTES:
GIRDER ELEVATION
Not to Scale
BENDING DETAILS
Not to Scale
SLEEVE DETAIL
Not to Scale

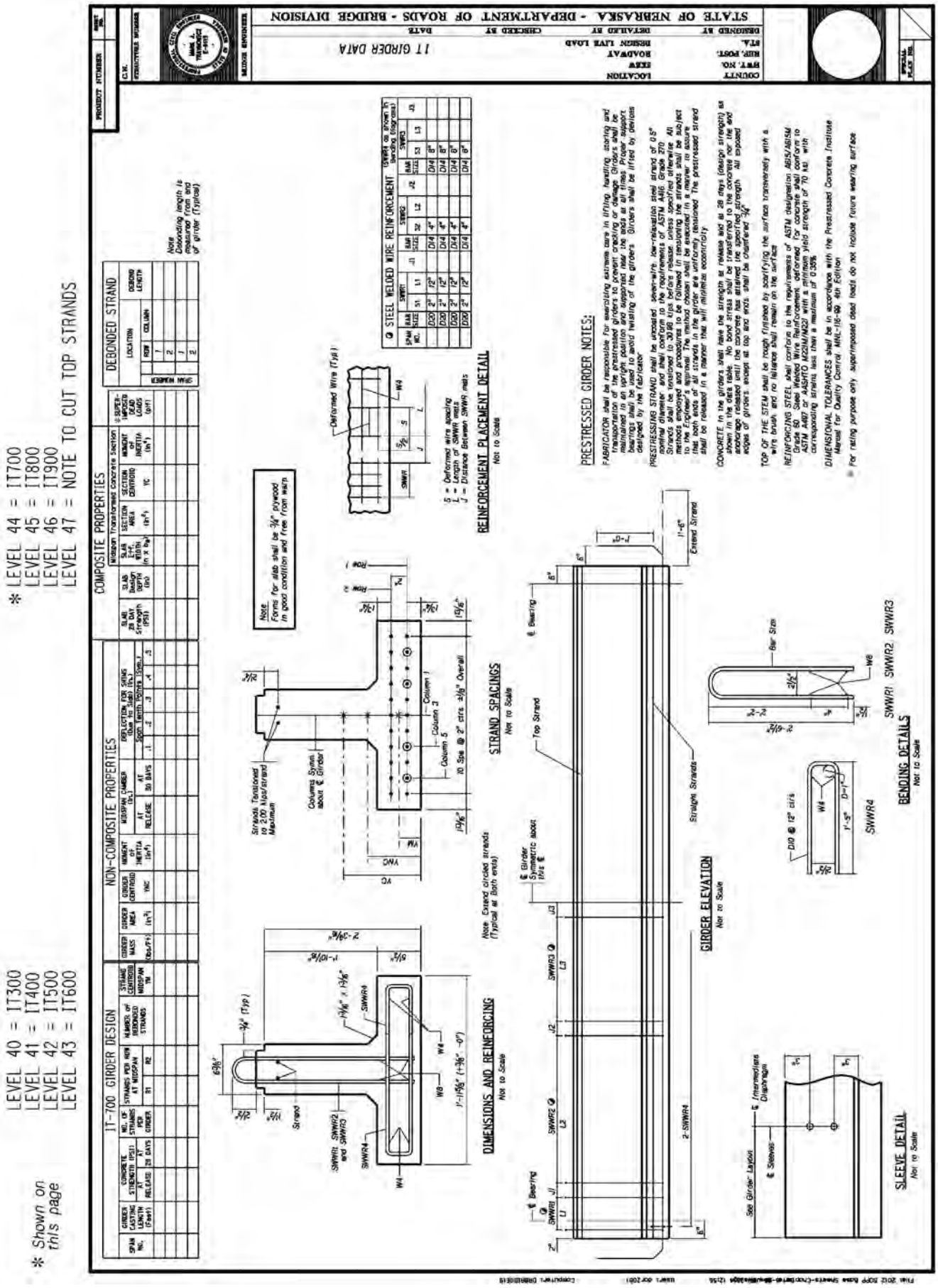
LEVEL 40 = IT300
LEVEL 41 = IT400
LEVEL 42 = IT500
LEVEL 43 = IT600
* Shown on this page
LEVEL 44 = IT700
LEVEL 45 = IT800
LEVEL 46 = IT900
LEVEL 47 = NOTE TO CUT TOP STRANDS
* Shown on this page
IT-700 GIRDER DESIGN
NON-COMPOSITE PROPERTIES
COMPOSITE PROPERTIES
DEBONDED STRAND
STATE OF NEBRASKA - DEPARTMENT OF ROADS - BRIDGE DIVISION
IT GIRDER DATA
DIMENSIONS AND REINFORCING
Not to Scale
STRAND SPACINGS
Not to Scale
REINFORCEMENT PLACEMENT DETAIL
Not to Scale
GIRDER ELEVATION
Not to Scale
BENDING DETAILS
Not to Scale
SLEEVE DETAIL
Not to Scale
PRESTRESSED GIRDER NOTES:

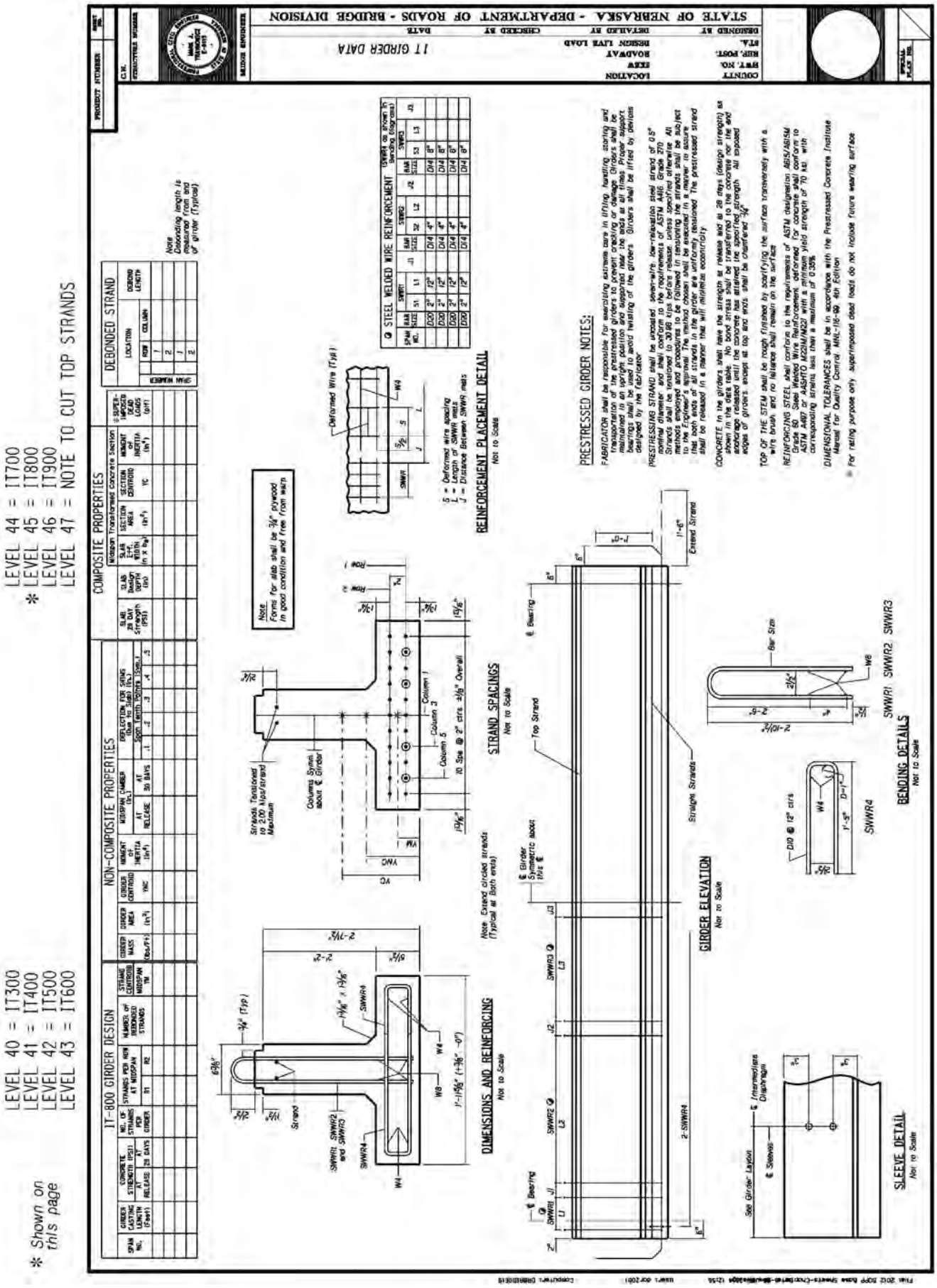
LEVEL 40 = IT300
LEVEL 41 = IT400
LEVEL 42 = IT500
LEVEL 43 = IT600
* Shown on this page
LEVEL 44 = IT700
* LEVEL 45 = IT800
LEVEL 46 = IT900
LEVEL 47 = NOTE TO CUT TOP STRANDS
IT-800 GIRDER DESIGN
NON-COMPOSITE PROPERTIES
COMPOSITE PROPERTIES
DEBONDED STRAND
STEEL WELDED WIRE REINFORCEMENT
PRESTRESSED GIRDER NOTES:
REINFORCEMENT PLACEMENT DETAIL
STRAND SPACINGS
DIMENSIONS AND REINFORCING
GIRDER ELEVATION
BENDING DETAILS
SLEEVE DETAIL
STATE OF NEBRASKA - DEPARTMENT OF ROADS - BRIDGE DIVISION
IT GIRDER DATA

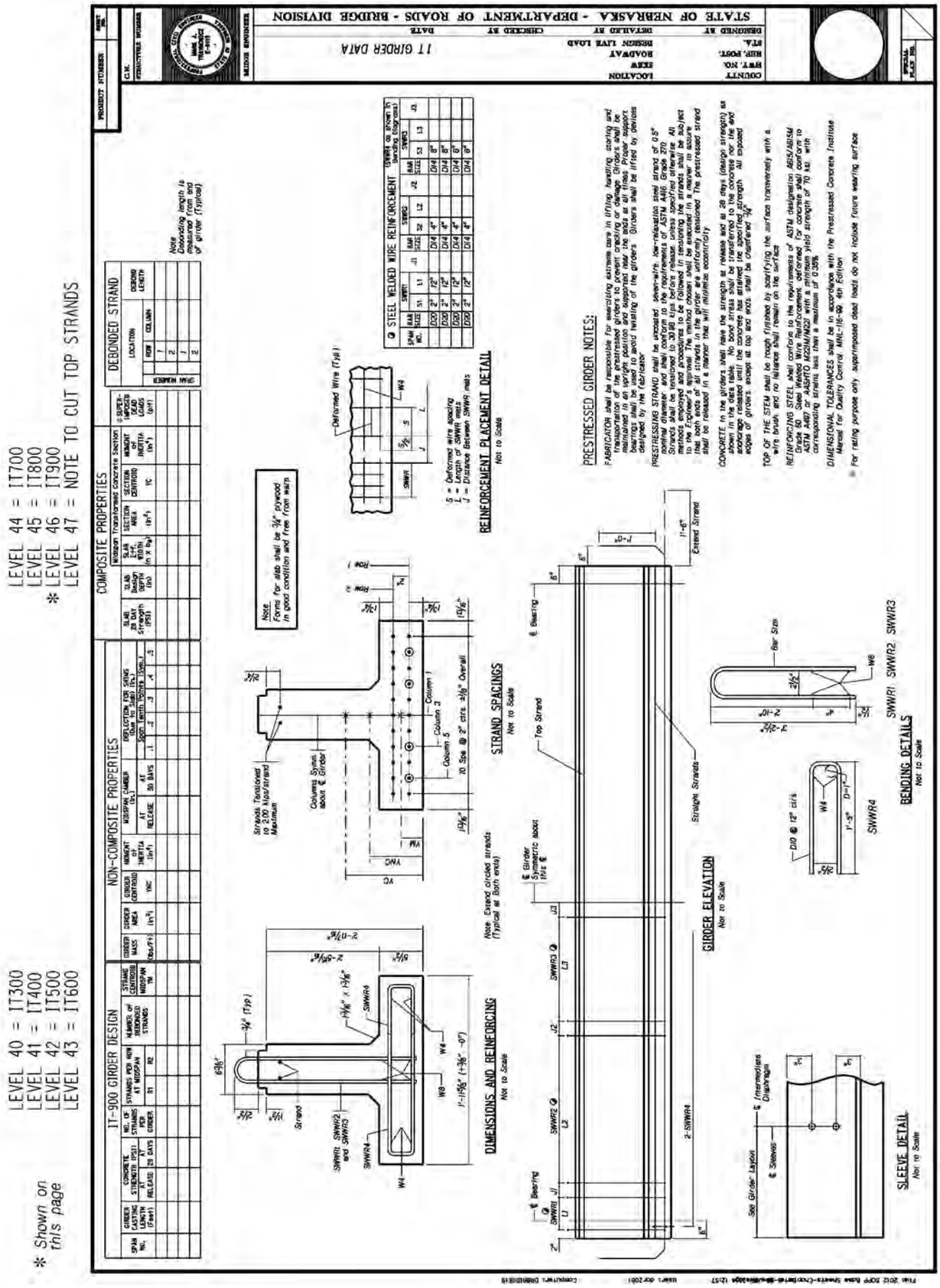
LEVEL 40 = IT300
LEVEL 41 = IT400
LEVEL 42 = IT500
LEVEL 43 = IT600
* Shown on this page
LEVEL 44 = IT700
LEVEL 45 = IT800
* LEVEL 46 = IT900
LEVEL 47 = NOTE TO CUT TOP STRANDS
IT-900 GIRDER DESIGN
NON-COMPOSITE PROPERTIES
COMPOSITE PROPERTIES
DEBONDED STRAND
STEEL WELDED WIRE REINFORCEMENT
IT GIRDER DATA
STATE OF NEBRASKA - DEPARTMENT OF ROADS - BRIDGE DIVISION
REINFORCEMENT PLACEMENT DETAIL
STRAND SPACINGS
DIMENSIONS AND REINFORCING
GIRDER ELEVATION
BENDING DETAILS
SLEEVE DETAIL
PRESTRESSED GIRDER NOTES:

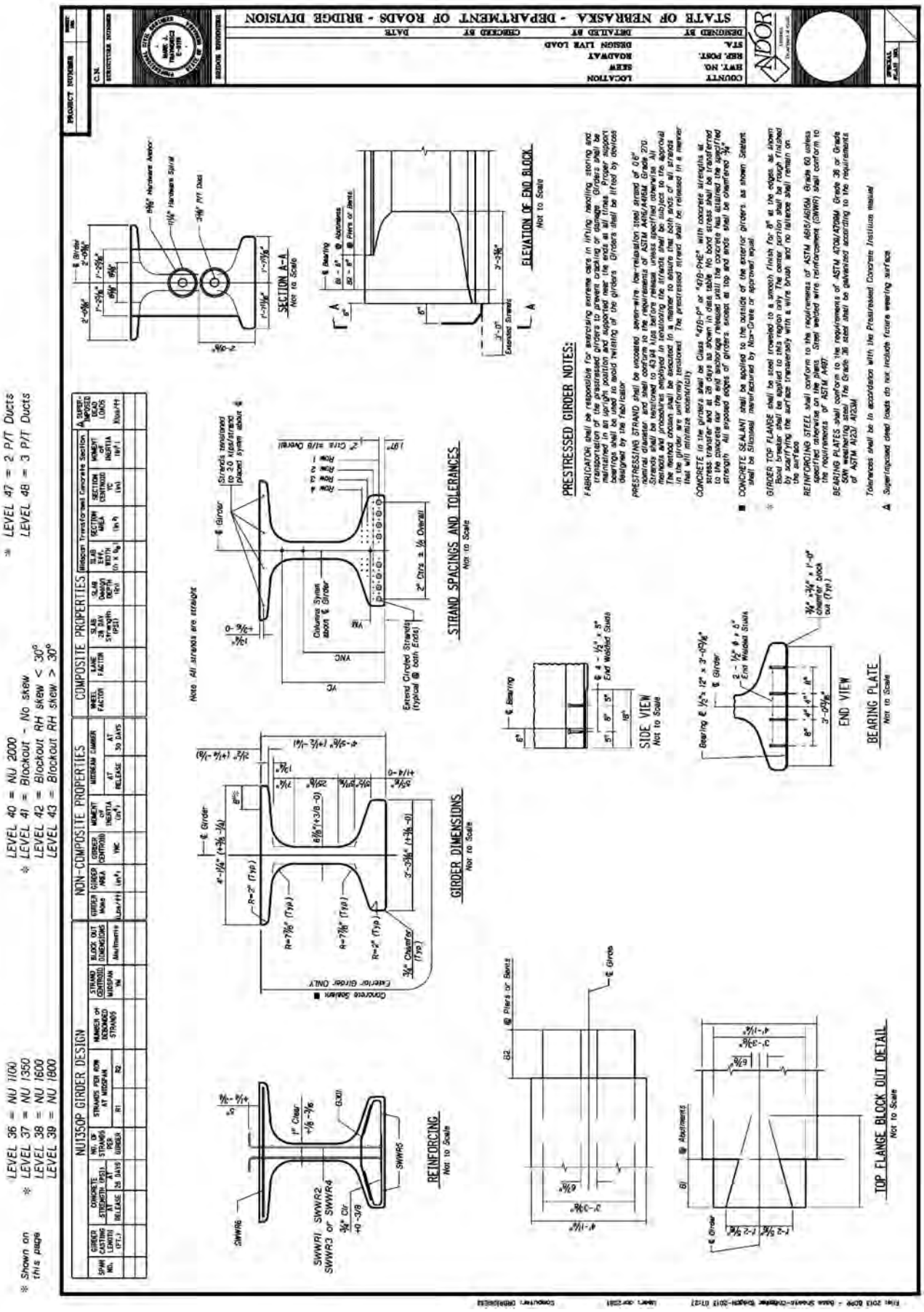
STATE OF NEBRASKA - DEPARTMENT OF ROADS - BRIDGE DIVISION
PRESTRESSED GIRDER NOTES:
SECTION A-A
Not to Scale
ELEVATION OF END BLOCK
Not to Scale
STRAND SPACINGS AND TOLERANCES
Not to Scale
GIRDER DIMENSIONS
Not to Scale
SIDE VIEW
Not to Scale
END VIEW
BEARING PLATE
Not to Scale
REINFORCING
Not to Scale
TOP FLANGE BLOCK OUT DETAIL
Not to Scale
NU1350P GIRDER DESIGN
NON-COMPOSITE PROPERTIES
COMPOSITE PROPERTIES
LEVEL 36 = NU 1100
LEVEL 37 = NU 1350
LEVEL 38 = NU 1600
LEVEL 39 = NU 1800
LEVEL 40 = NU 2000
LEVEL 41 = Blockout - No skew
LEVEL 42 = Blockout RH skew < 30°
LEVEL 43 = Blockout RH skew > 30°
LEVEL 47 = 2 P/T Ducts
LEVEL 48 = 3 P/T Ducts

* Shown on this page

* LEVEL 44 = Simple span
LEVEL 45 = Multi spans
* LEVEL 46 = 2 tendons - simple span
* LEVEL 47 = 2 P/T Ducts

LEVEL 48 = 3 P/T Ducts
LEVEL 49 = 3 tendons - simple span
LEVEL 50 = 2 tendons - Multi spans
LEVEL 51 = 3 tendons - Multi spans

LAYOUT DISTANCES FOR POST-TENSIONING DUCTS (SPAN NO. 1)			LAYOUT DISTANCES FOR POST-TENSIONING DUCTS (SPAN NO. 2)			LAYOUT DISTANCES FOR POST-TENSIONING DUCTS (SPAN NO. 3)		
POINT DESCRIPTION	DISTANCE FROM ℄ ABUTMENT NO. 1 (ft)	ECCENTRICITY (in) FROM BOTTOM OF GIRDER TO ℄ GRAVITY OF DUCTS	POINT DESCRIPTION	DISTANCE FROM ℄ ABUTMENT NO. 1 (ft)	ECCENTRICITY (in) FROM BOTTOM OF GIRDER TO ℄ GRAVITY OF DUCTS	POINT DESCRIPTION	DISTANCE FROM ℄ ABUTMENT NO. 1 (ft)	ECCENTRICITY (in) FROM BOTTOM OF GIRDER TO ℄ GRAVITY OF DUCTS

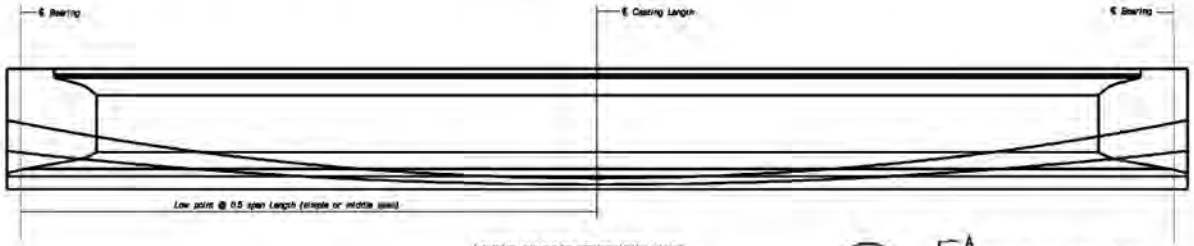

LAYOUT OF POST-TENSIONING DUCT
Not to Scale

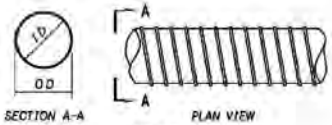

SECTION A-A

PLAN VIEW

DUCT DETAIL
Not to Scale

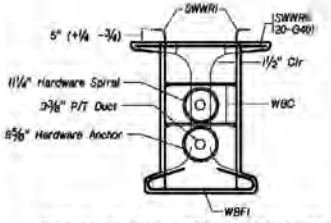

SECTION OF END BLOCK SHOWING REINFORCING
Not to Scale

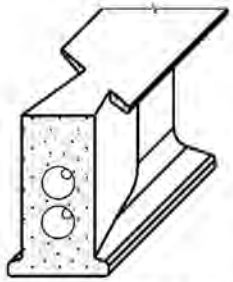

GENERAL ELEVATION OF GIRDER AT ABUTMENT END
Not to Scale

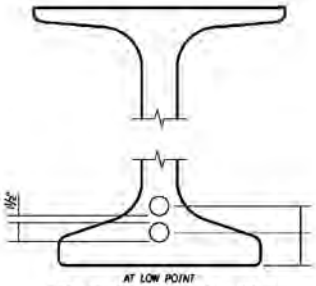

POST-TENSIONING TENDON LAYOUT
Not to Scale

POST-TENSIONING NOTES:

DRAINAGE OF BLOCKOUTS
All post-tensioning anchorage blockouts in the girder shall be provided with suitable drain pipes to prevent standing water. Drain pipes shall be maintained free of obstructions at all times prior to filling the blockouts with grout after all post-tensioning is completed.

DUCTS Post-tensioning ducts shall meet the following requirements
1. Post-tensioning ducts shall be Rigid Galvanized Metal
2. The ducts shall be tied to reinforcing bars at a maximum interval of 2'-0" to prevent displacement of the ducts during concrete casting
3. Ducts shall have grouting vents at each interior support and at each low point along the tendon profile
4. After installation the ends of the ducts shall be sealed at all times to prevent entry of water and debris
5. The duct placement tolerance shall be ±1/4" in the horizontal direction and ±1/2" in the vertical direction However, the Engineer may relax the vertical tolerance if necessary to achieve a smooth duct profile
6. A 3'-0" long (±) transition shall be fabricated to connect each post-tensioning anchorage to the adjacent duct The contractor shall submit shop drawings showing complete details of these transitions to the engineer for approval
7. The Contractor shall not set the girder side forms in place until the Engineer has visually inspected and approved the duct profile and reinforcing cage
8. Before the girders are transported to the job site, the Contractor shall demonstrate that the ducts are not blocked by means approved by the engineer
9. Any duct splice shall be designed to fit between the beam stirrups at a 5" spacing and shall not infringe on the clear cover. Stirrup spacing may be adjusted up to 2" provided the total number of stirrups within 3'-0" on either side of the splice is the same as required by the plans

POST-TENSIONING SEQUENCING
Post-tensioning shall be accomplished by alternating symmetrical pattern across the roadway, beginning at center girder(s). The lower tendons shall be post-tensioned in all girders across the width of the roadway prior to post-tensioning the upper tendons All tendons shall be stressed from both ends, one end at a time

SHOP DRAWINGS
The Contractor shall submit shop drawings showing complete details of the post-tensioning system to the Engineer for approval The Contractor shall submit tendon stressing details for approval by the Engineer These details shall indicate jacking forces, the sequence of stressing, calculated extensions at each jack, friction coefficient and anchor set loss

JACKING FORCE
The jacking force required before anchor set is 41 Kips per strand for 0.6" ϕ strand

POST-TENSIONING PERSONNEL
The full-time person in charge of the post-tensioning operation shall have a minimum of three years of full-time experience in post-tensioning. Documentation of this experience shall be submitted to the Engineer for approval

PROCEDURES TO AVOID BLOCKED DUCTS
The contractor shall preform the following procedures to avoid blocking post-tensioning ducts
1. Before transporting the girder to job site See duct note No. 8
2. For wet joint girder splice During or immediately after every wet joint girder splice is cast (if any), the Contractor shall demonstrate to the satisfaction of the engineer that the ducts are not blocked by methods shown on the shop plans and approved by the engineer The contractor shall complete this demonstration before the wet joint girder splice concrete has taken its initial set

*** CONSTRUCTION SEQUENCE

* * Construction sequence shall be determined by the design engineer

PROJECT NUMBER | SHEET NO.
C.N.
STRUCTURE NUMBER
BRIDGE ENGINEER
POST-TENSIONING DETAILS
DATE
CHECKED BY
DETAILED BY
DESIGNED BY
LOCATION
SKEW
ROADWAY
DESIGN LIVE LOAD
COUNTY
EFFT. NO.
REF. POST.
STA.
STATE OF NEBRASKA - DEPARTMENT OF ROADS - BRIDGE DIVISION
NDOR
SPECIAL PLAN NO.

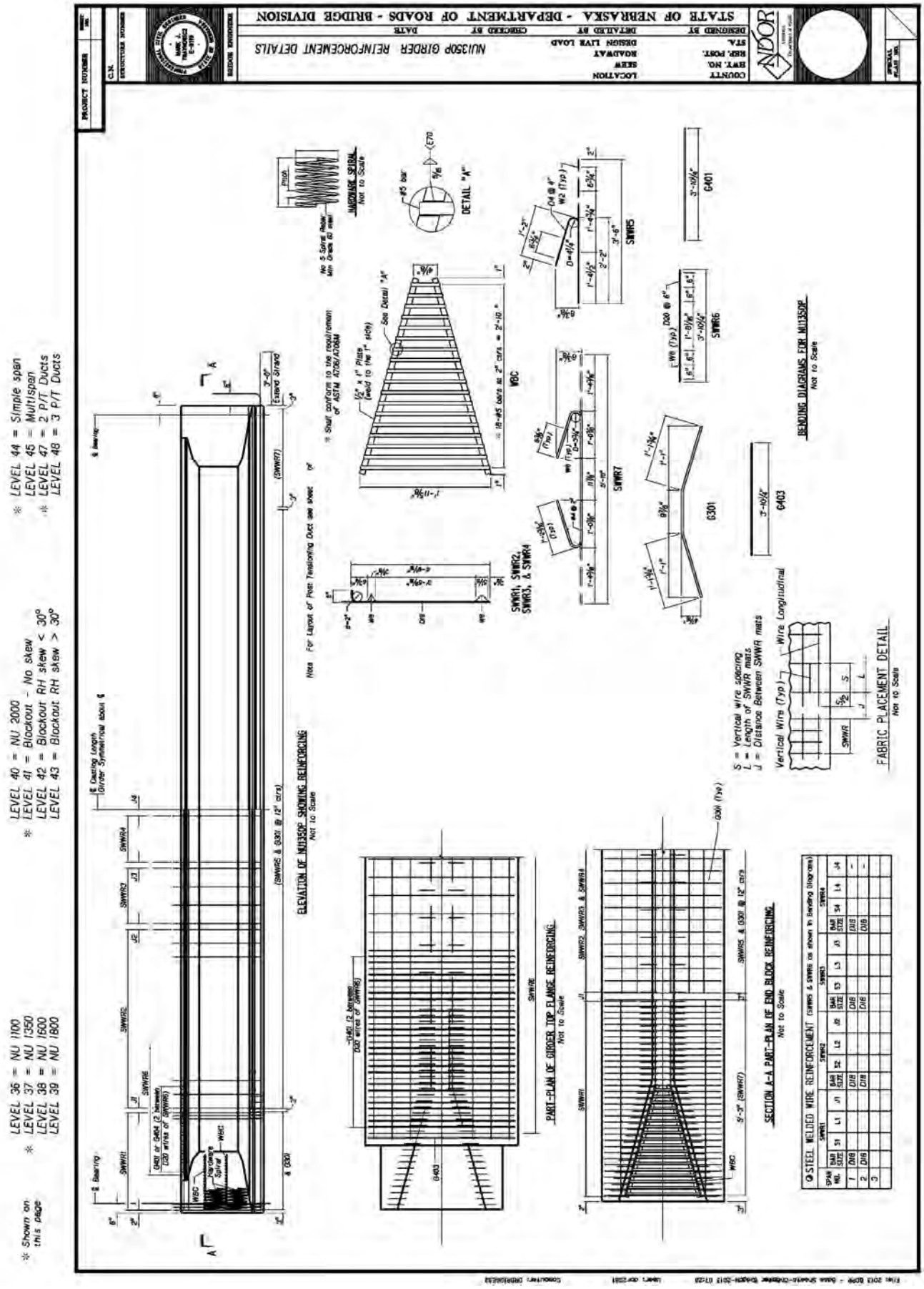
STATE OF NEBRASKA - DEPARTMENT OF ROADS - BRIDGE DIVISION
NU1350P GIRDER REINFORCEMENT DETAILS
ELEVATION OF NU1350P SHOWING REINFORCING
Not to Scale
PART-PLAN OF GIRDER TOP FLANGE REINFORCING
SECTION A-A PART-PLAN OF END BLOCK REINFORCING
DETAIL "A"
BEARING DIAGRAMS FOR NU1350P
FABRIC PLACEMENT DETAIL
Vertical Wire (Typ)
Wire Longitudinal
S = Vertical wire spacing
L = Length of SWWR mats
J = Distance Between SWWR mats
SWWR1, SWWR2, SWWR3, & SWWR4
SWWR5
SWWR6
SWWR7
W8C
0401
0301
0403
LEVEL 36 = NU 1100
LEVEL 37 = NU 1350
LEVEL 38 = NU 1600
LEVEL 39 = NU 1800
LEVEL 40 = NU 2000
LEVEL 41 = Blockout - No skew
LEVEL 42 = Blockout RH skew < 30°
LEVEL 43 = Blockout RH skew > 30°
LEVEL 44 = Simple span
LEVEL 45 = Multispan
LEVEL 47 = 2 P/T Ducts
LEVEL 48 = 3 P/T Ducts
* Shown on this page

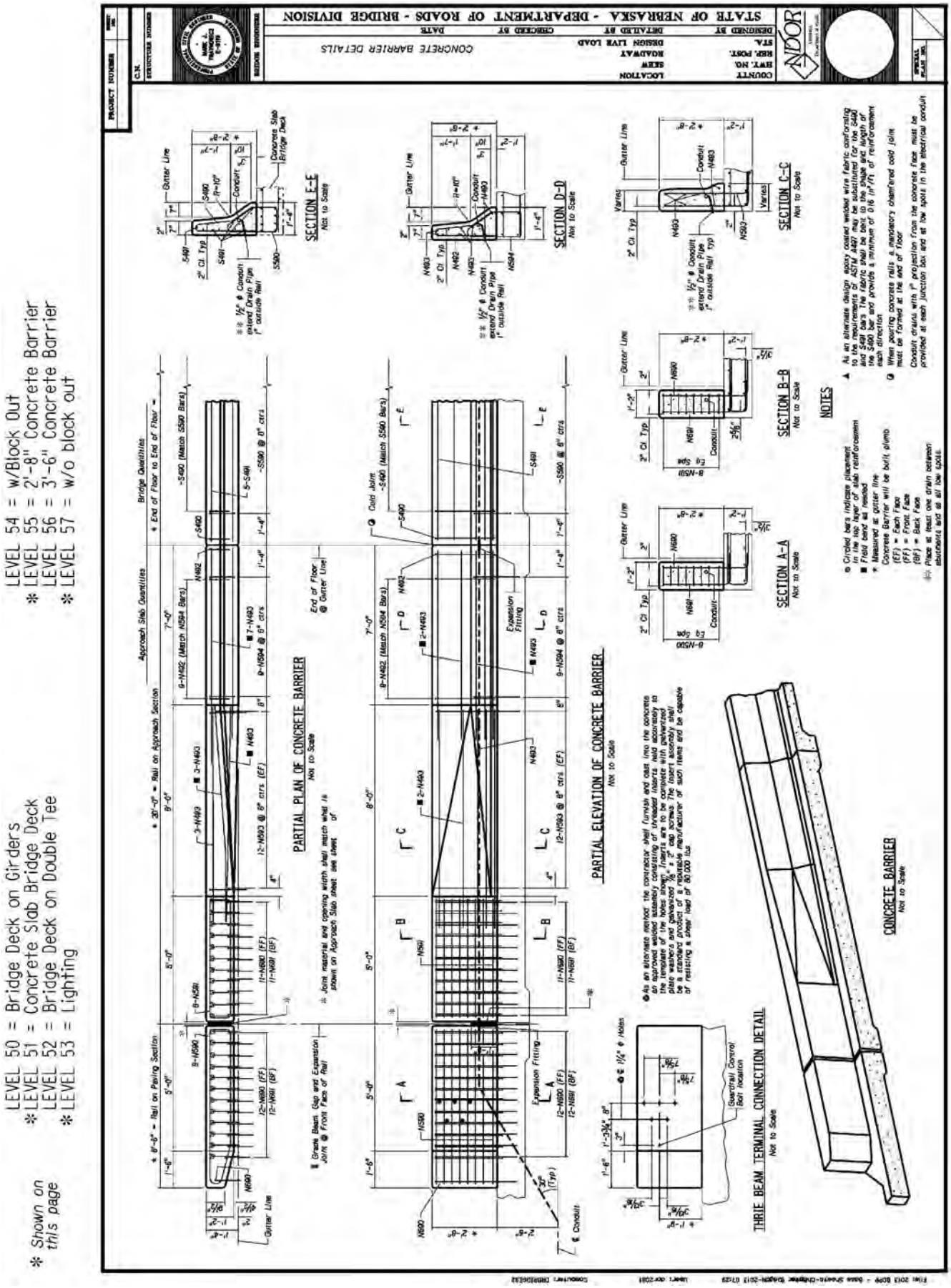
STATE OF NEBRASKA - DEPARTMENT OF ROADS - BRIDGE DIVISION
CONCRETE BARRIER DETAILS
LEVEL 50 = Bridge Deck on Girders
*LEVEL 51 = Concrete Slab Bridge Deck
LEVEL 52 = Bridge Deck on Double Tee
*LEVEL 53 = Lighting
LEVEL 54 = w/Block Out
*LEVEL 55 = 2'-8" Concrete Barrier
LEVEL 56 = 2'-6" Concrete Barrier
*LEVEL 57 = w/o block out
* Shown on this page
PARTIAL PLAN OF CONCRETE BARRIER
Not to Scale
PARTIAL ELEVATION OF CONCRETE BARRIER
Not to Scale
SECTION E-E
SECTION D-D
SECTION C-C
SECTION B-B
SECTION A-A
NOTES
THRIE BEAM TERMINAL CONNECTION DETAIL
Not to Scale
CONCRETE BARRIER
Not to Scale

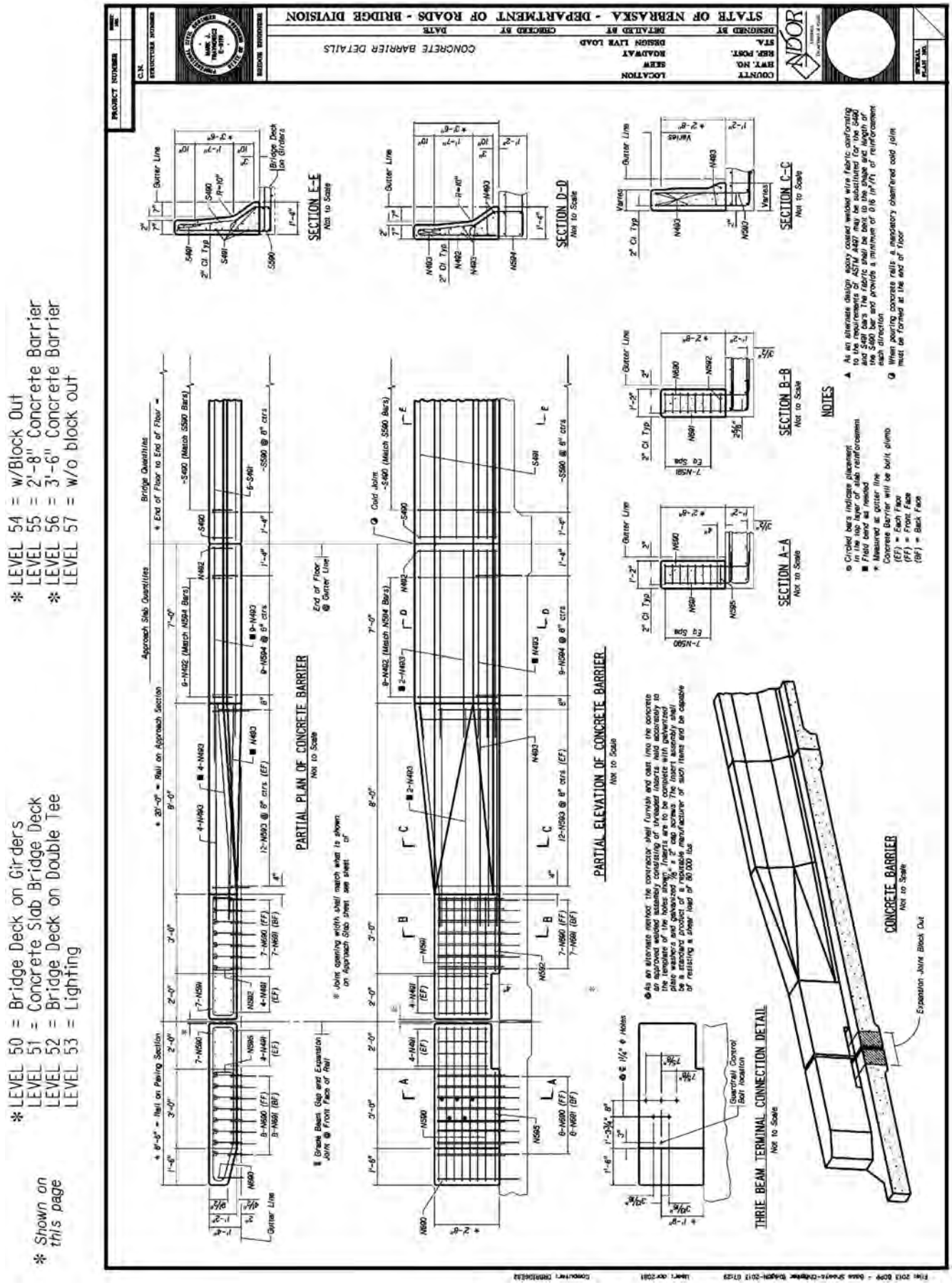
STATE OF NEBRASKA - DEPARTMENT OF ROADS - BRIDGE DIVISION
CONCRETE BARRIER DETAILS
PARTIAL PLAN OF CONCRETE BARRIER
Not to Scale
PARTIAL ELEVATION OF CONCRETE BARRIER
Not to Scale
SECTION E-E
SECTION D-D
SECTION C-C
SECTION B-B
SECTION A-A
THRIE BEAM TERMINAL CONNECTION DETAIL
CONCRETE BARRIER
NOTES
* LEVEL 50 = Bridge Deck on Girders
LEVEL 51 = Concrete Slab Bridge Deck
LEVEL 52 = Bridge Deck on Double Tee
LEVEL 53 = Lighting
* LEVEL 54 = w/Block Out
LEVEL 55 = 2'-8" Concrete Barrier
LEVEL 56 = 3'-6" Concrete Barrier
LEVEL 57 = w/o block out
* Shown on this page

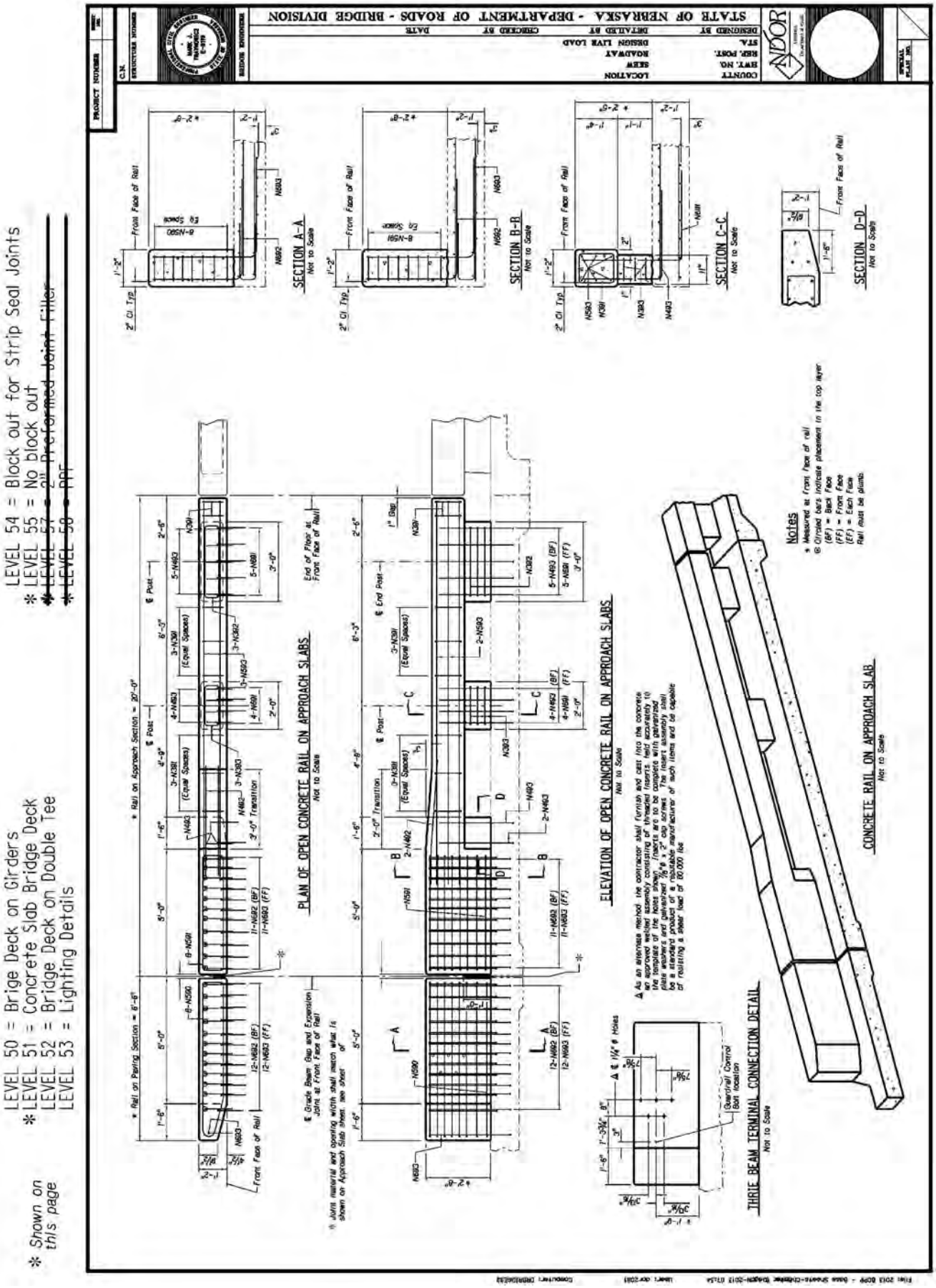
STATE OF NEBRASKA - DEPARTMENT OF ROADS - BRIDGE DIVISION
SECTION A-A
Not to Scale
SECTION B-B
Not to Scale
SECTION C-C
Not to Scale
SECTION D-D
Not to Scale
PLAN OF OPEN CONCRETE RAIL ON APPROACH SLABS
Not to Scale
ELEVATION OF OPEN CONCRETE RAIL ON APPROACH SLABS
Not to Scale
CONCRETE RAIL ON APPROACH SLAB
Not to Scale
THRIE BEAM TERMINAL CONNECTION DETAIL
Not to Scale
Notes
LEVEL 50 = Brige Deck on Girders
LEVEL 51 = Concrete Slab Bridge Deck
LEVEL 52 = Bridge Deck on Double Tee
LEVEL 53 = Lighting Details
LEVEL 54 = Block out for Strip Seal Joints
LEVEL 55 = No block out
LEVEL 56 = PPF
* Shown on this page

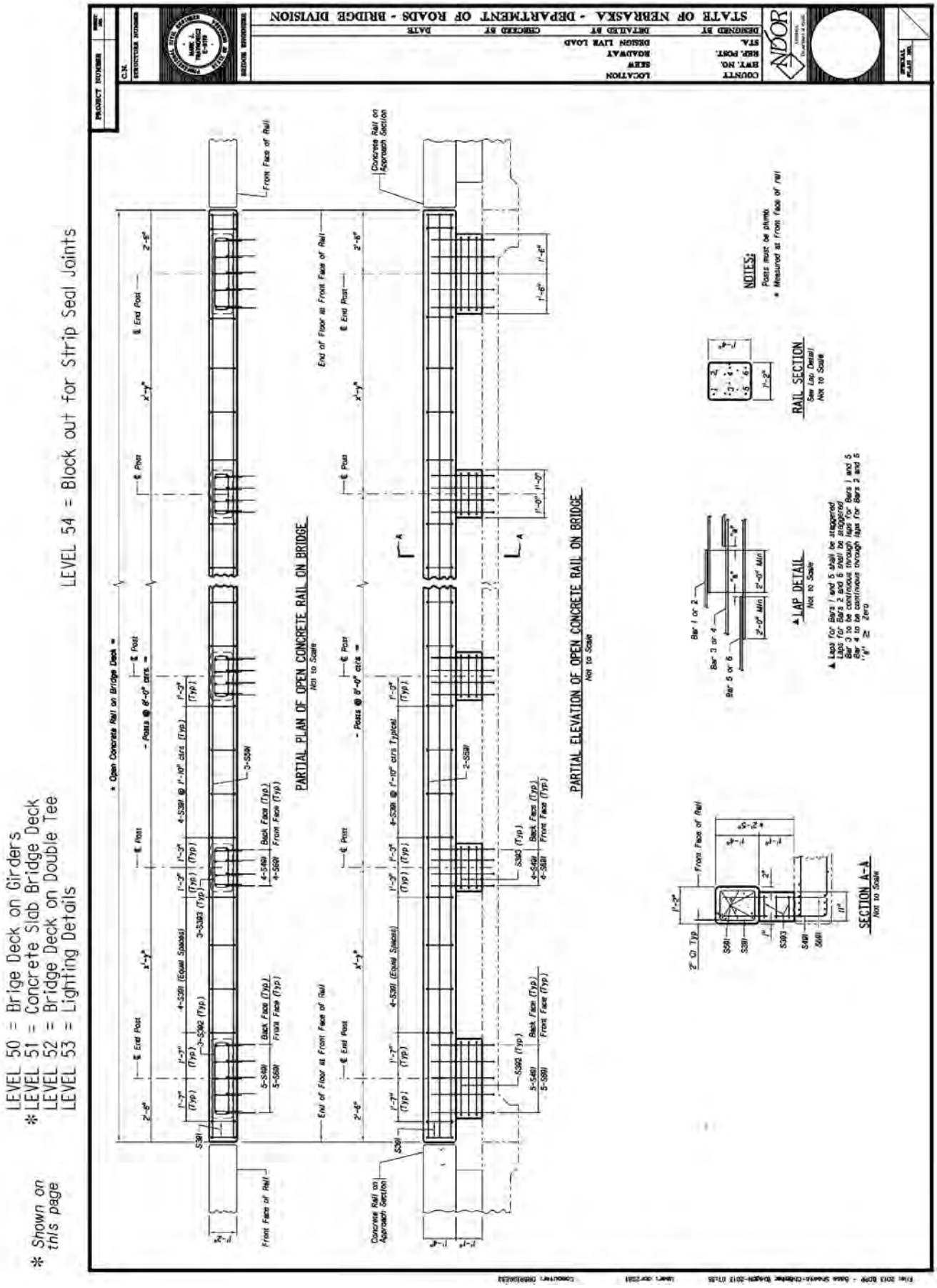
STATE OF NEBRASKA - DEPARTMENT OF ROADS - BRIDGE DIVISION
LEVEL 54 = Block out for Strip Seal Joints
LEVEL 50 = Brige Deck on Girders
*LEVEL 51 = Concrete Slab Bridge Deck
LEVEL 52 = Bridge Deck on Double Tee
LEVEL 53 = Lighting Details
* Shown on this page
PARTIAL PLAN OF OPEN CONCRETE RAIL ON BRIDGE
Not to Scale
PARTIAL ELEVATION OF OPEN CONCRETE RAIL ON BRIDGE
Not to Scale
RAIL SECTION
See Lap Detail
Not to Scale
LAP DETAIL
Not to Scale
SECTION A-A
Not to Scale
NOTES:
Posts must be plumb.
* Measured as from face of rail

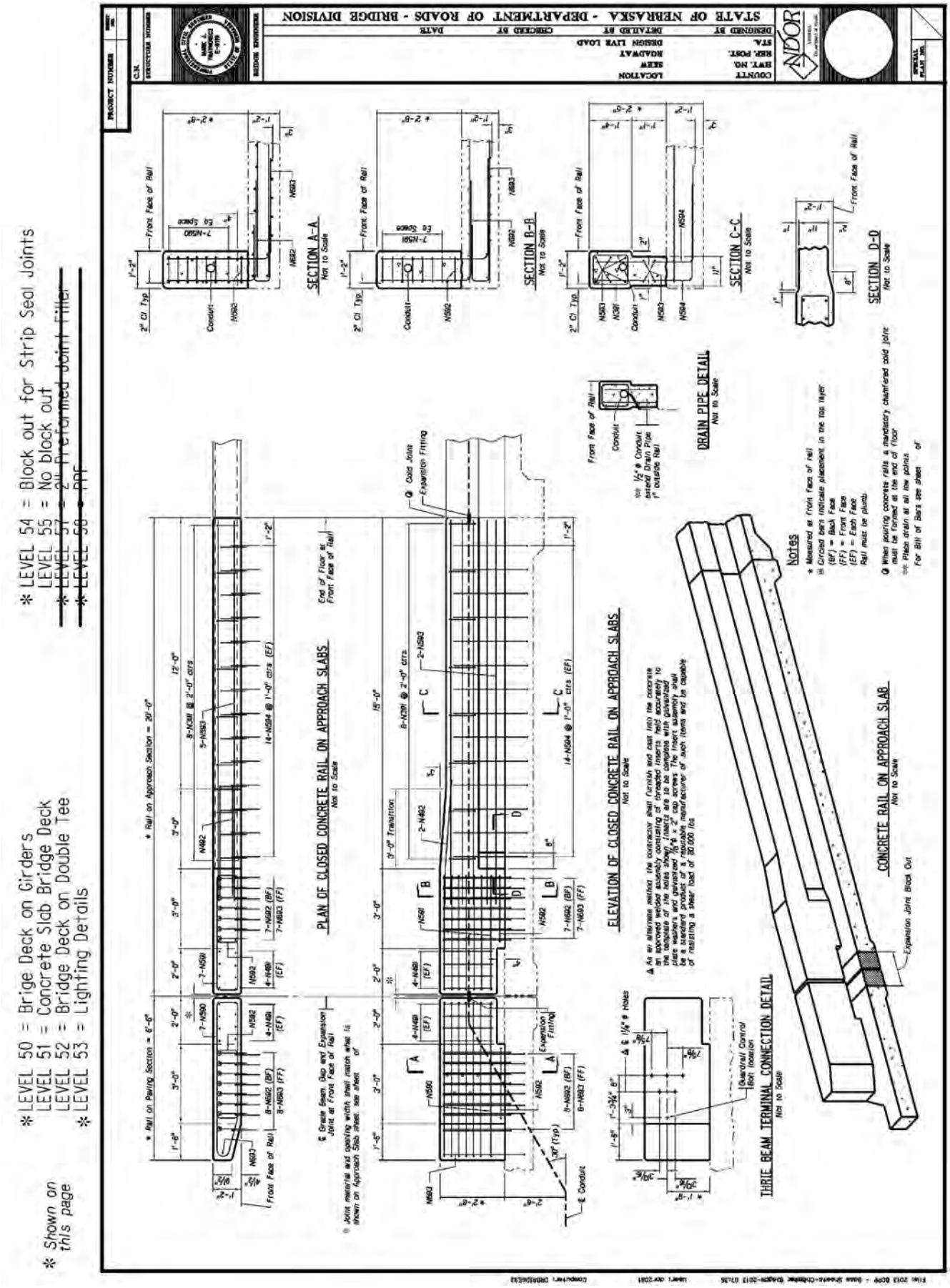
STATE OF NEBRASKA - DEPARTMENT OF ROADS - BRIDGE DIVISION
* LEVEL 50 = Brige Deck on Girders
LEVEL 51 = Concrete Slab Bridge Deck
LEVEL 52 = Bridge Deck on Double Tee
* LEVEL 53 = Lighting Details
* LEVEL 54 = Block out for Strip Seal Joints
LEVEL 55 = No block out
* LEVEL 57 = 2" Preformed Joint Filler
* LEVEL 58 = PPF
* Shown on this page
SECTION A-A
Not to Scale
SECTION B-B
Not to Scale
SECTION C-C
Not to Scale
SECTION D-D
Not to Scale
DRAIN PIPE DETAIL
Not to Scale
PLAN OF CLOSED CONCRETE RAIL ON APPROACH SLABS
Not to Scale
ELEVATION OF CLOSED CONCRETE RAIL ON APPROACH SLABS
Not to Scale
THRIE BEAM TERMINAL CONNECTION DETAIL
Not to Scale
CONCRETE RAIL ON APPROACH SLAB
Not to Scale
Notes

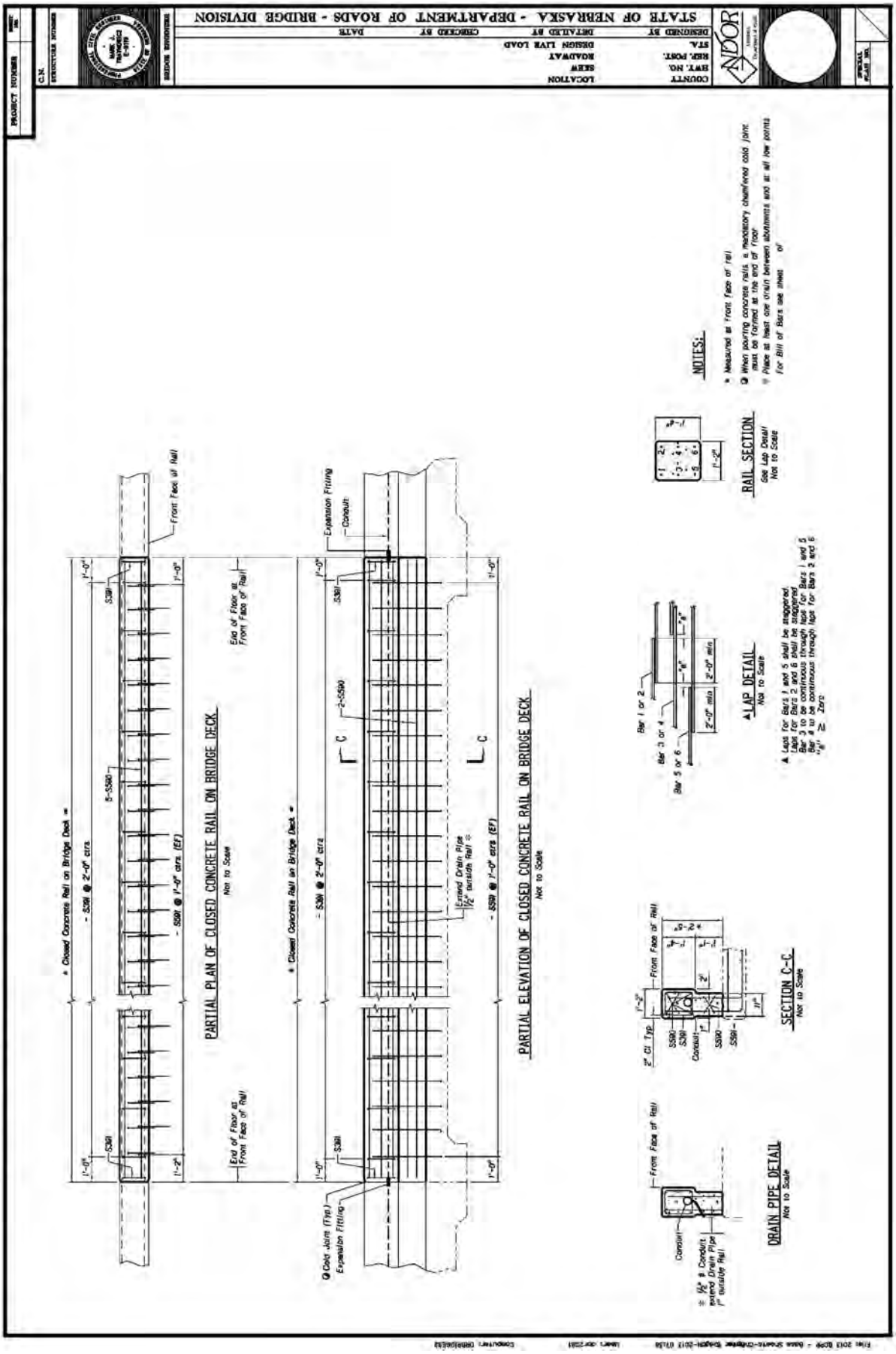
STATE OF NEBRASKA - DEPARTMENT OF ROADS - BRIDGE DIVISION
PARTIAL PLAN OF CLOSED CONCRETE RAIL ON BRIDGE DECK
Not to Scale
PARTIAL ELEVATION OF CLOSED CONCRETE RAIL ON BRIDGE DECK
Not to Scale
RAIL SECTION
See Lap Detail
Not to Scale
LAP DETAIL
Not to Scale
SECTION C-C
Not to Scale
DRAIN PIPE DETAIL
Not to Scale
NOTES:
* Measured as Front Face of rail
@ When pouring concrete rails a mandatory chamfered cold joint must be formed at the end of floor
# Place at least one drain between abutments and at all low points
For Bill of Bars see sheet of
* LEVEL 50 = Brige Deck on Girders
LEVEL 51 = Concrete Slab Bridge Deck
LEVEL 52 = Bridge Deck on Double Tee
* LEVEL 53 = Lighting Details
* LEVEL 54 = Block out for Strip Seal Joints
* Shown on this page

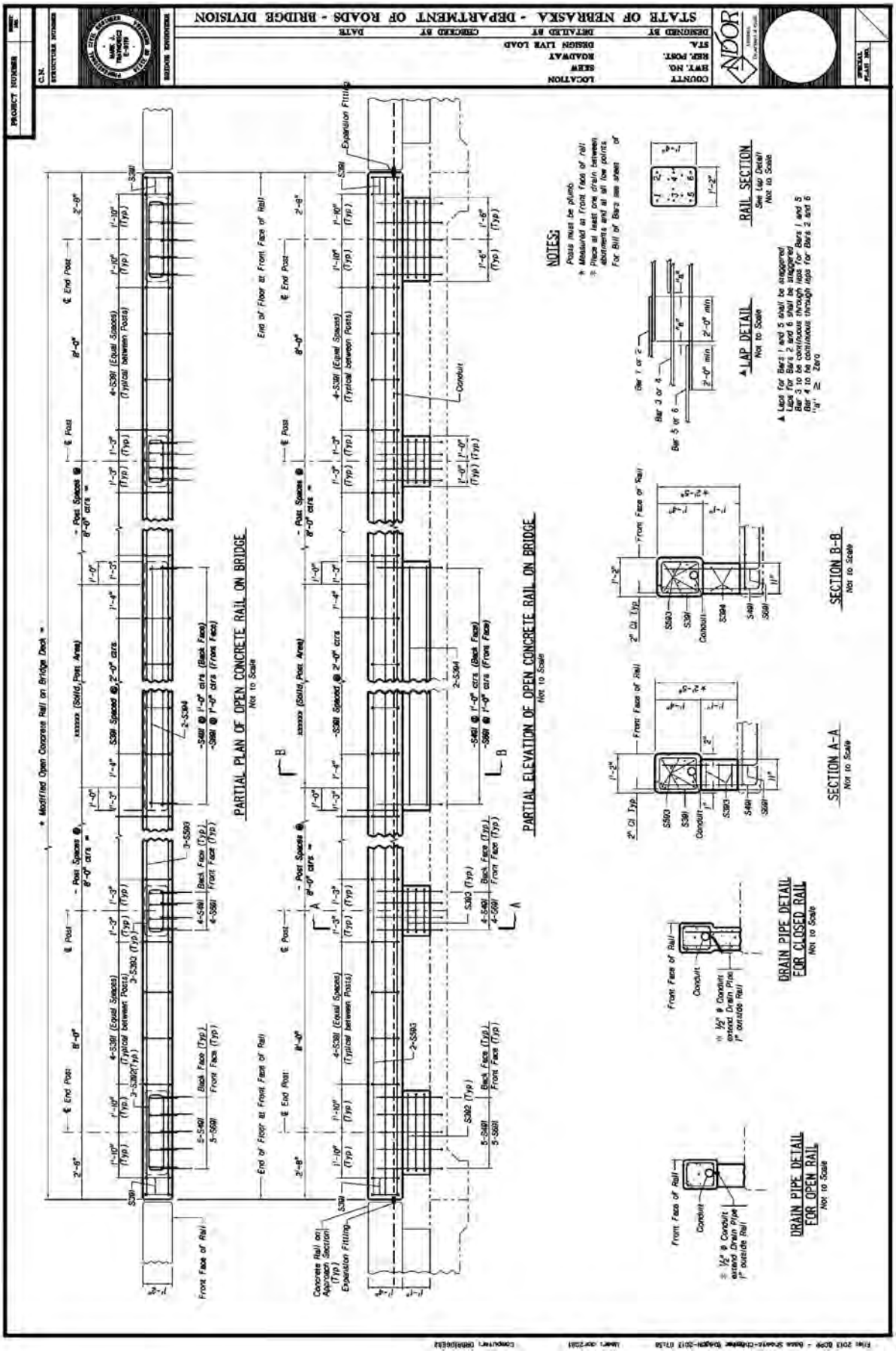

* LEVEL 50 = Brige Deck on Girders
LEVEL 51 = Concrete Slab Bridge Deck
LEVEL 52 = Bridge Deck on Double Tee
* LEVEL 53 = Lighting Details

* LEVEL 54 = Block out for Strip Seal Joints

* Shown on this page

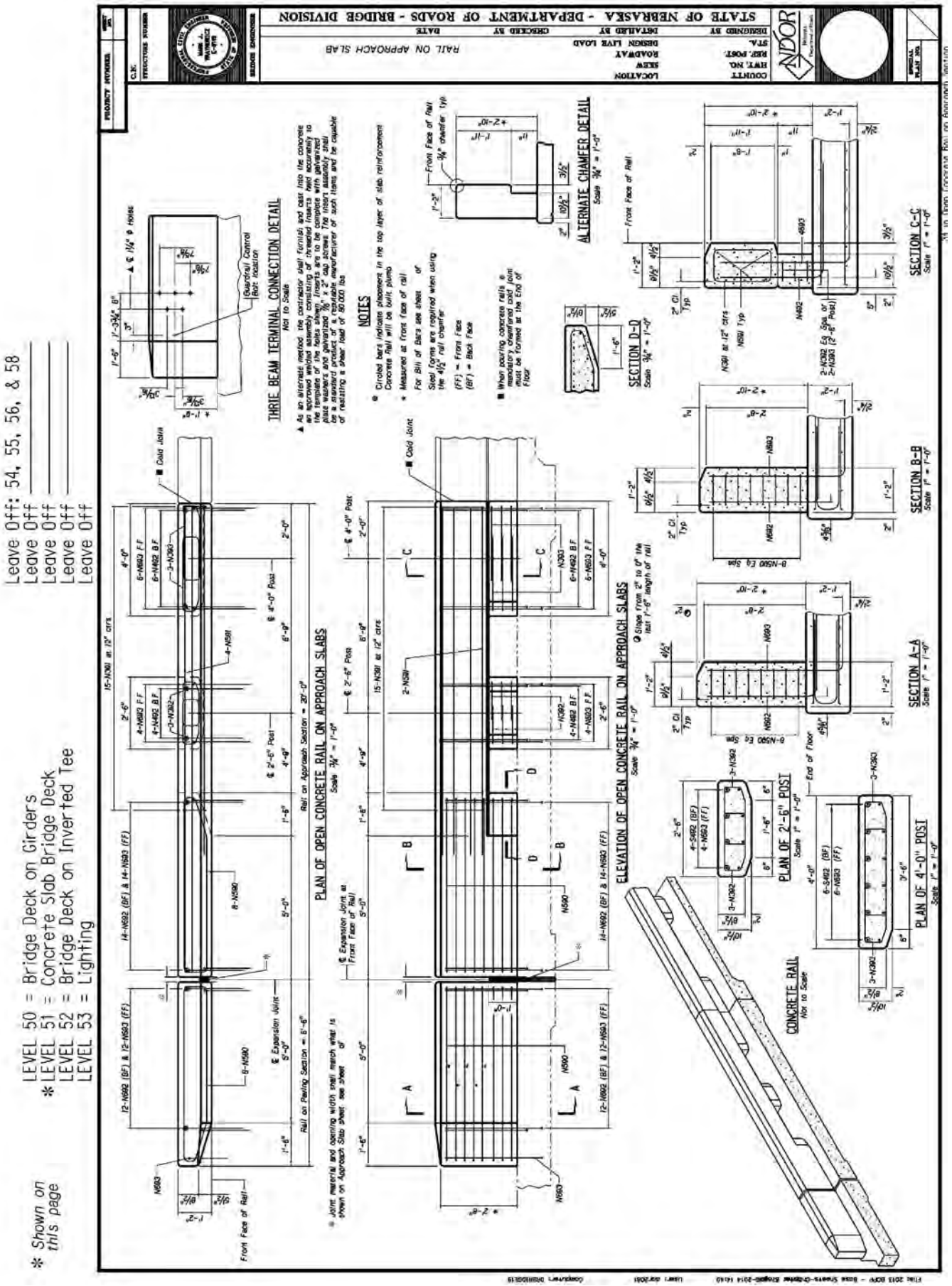
STATE OF NEBRASKA - DEPARTMENT OF ROADS - BRIDGE DIVISION
RAIL ON APPROACH SLAB
THRIE BEAM TERMINAL CONNECTION DETAIL
Not to Scale
NOTES
ALTERNATE CHAMFER DETAIL
SECTION D-D
SECTION C-C
SECTION B-B
SECTION A-A
PLAN OF OPEN CONCRETE RAIL ON APPROACH SLABS
ELEVATION OF OPEN CONCRETE RAIL ON APPROACH SLABS
PLAN OF 2'-6" POST
PLAN OF 4'-0" POST
CONCRETE RAIL
Not to Scale
Leave Off: 54, 55, 56, & 58
Leave Off
Leave Off
Leave Off
Leave Off
LEVEL 50 = Bridge Deck on Girders
*LEVEL 51 = Concrete Slab Bridge Deck
LEVEL 52 = Bridge Deck on Inverted Tee
LEVEL 53 = Lighting
* Shown on this page

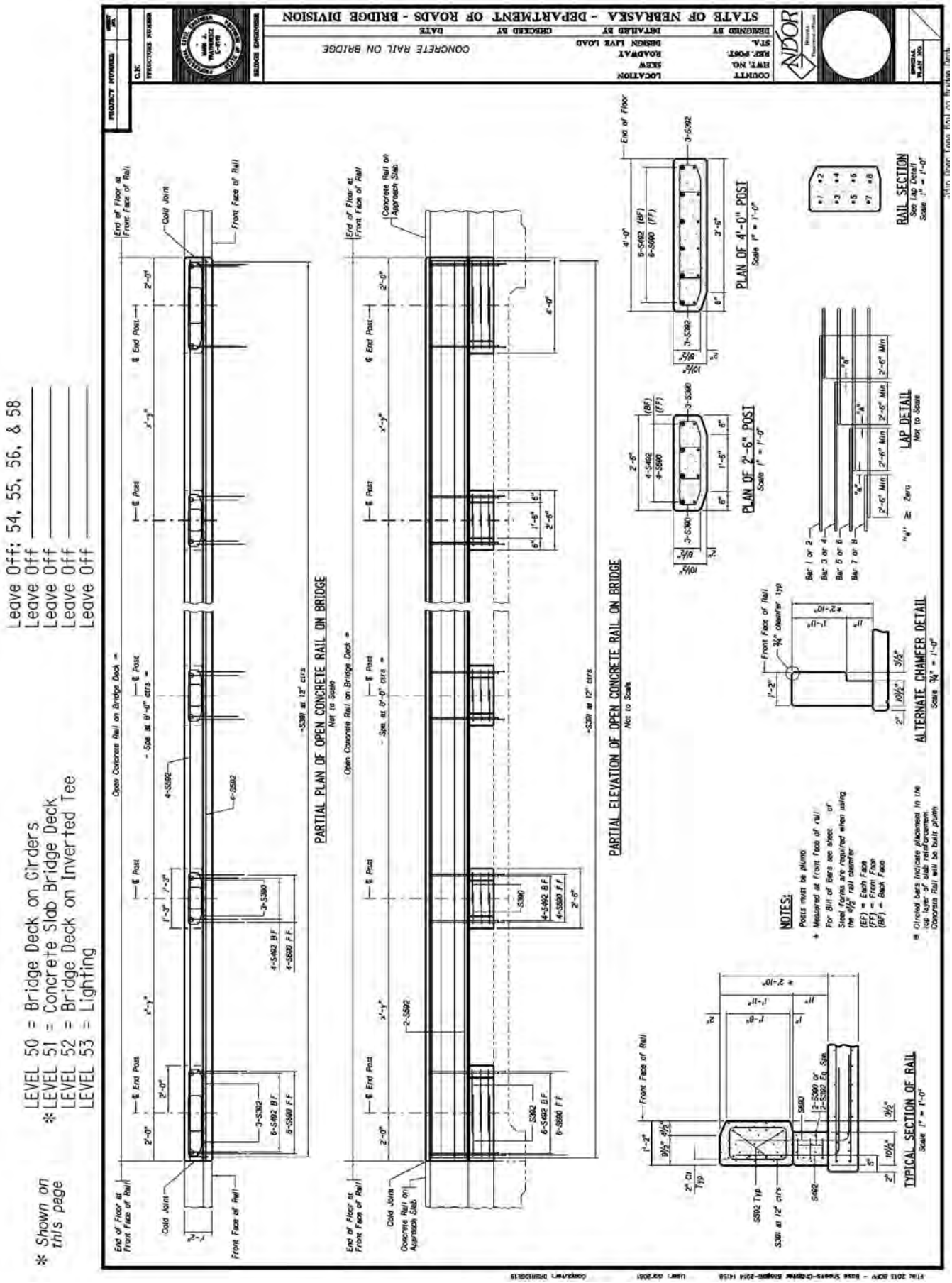
STATE OF NEBRASKA - DEPARTMENT OF ROADS - BRIDGE DIVISION
CONCRETE RAIL ON BRIDGE
PARTIAL PLAN OF OPEN CONCRETE RAIL ON BRIDGE
Not to Scale
PARTIAL ELEVATION OF OPEN CONCRETE RAIL ON BRIDGE
Not to Scale
PLAN OF 4'-0" POST
Scale 1" = 1'-0"
PLAN OF 2'-6" POST
Scale 1" = 1'-0"
RAIL SECTION
See Lap Detail
Scale 1" = 1'-0"
LAP DETAIL
Not to Scale
ALTERNATE CHAMFER DETAIL
Scale 3/4" = 1'-0"
TYPICAL SECTION OF RAIL
Scale 1" = 1'-0"
NOTES:
Posts must be plumb
* Measured at front face of rail
For Bill of Bars see sheet
Steel forms are required when using the 3/4" rail chamfer
(EF) = Each Face
(FF) = Front Face
(BF) = Back Face
@ Circled bars indicate placement in the top layer of slab reinforcement. Concrete Rail will be built plumb
LEVEL 50 = Bridge Deck on Girders
*LEVEL 51 = Concrete Slab Bridge Deck
LEVEL 52 = Bridge Deck on Inverted Tee
LEVEL 53 = Lighting
* Shown on this page
Leave Off; 54, 55, 56, & 58
Leave Off
Leave Off
Leave Off
Leave Off

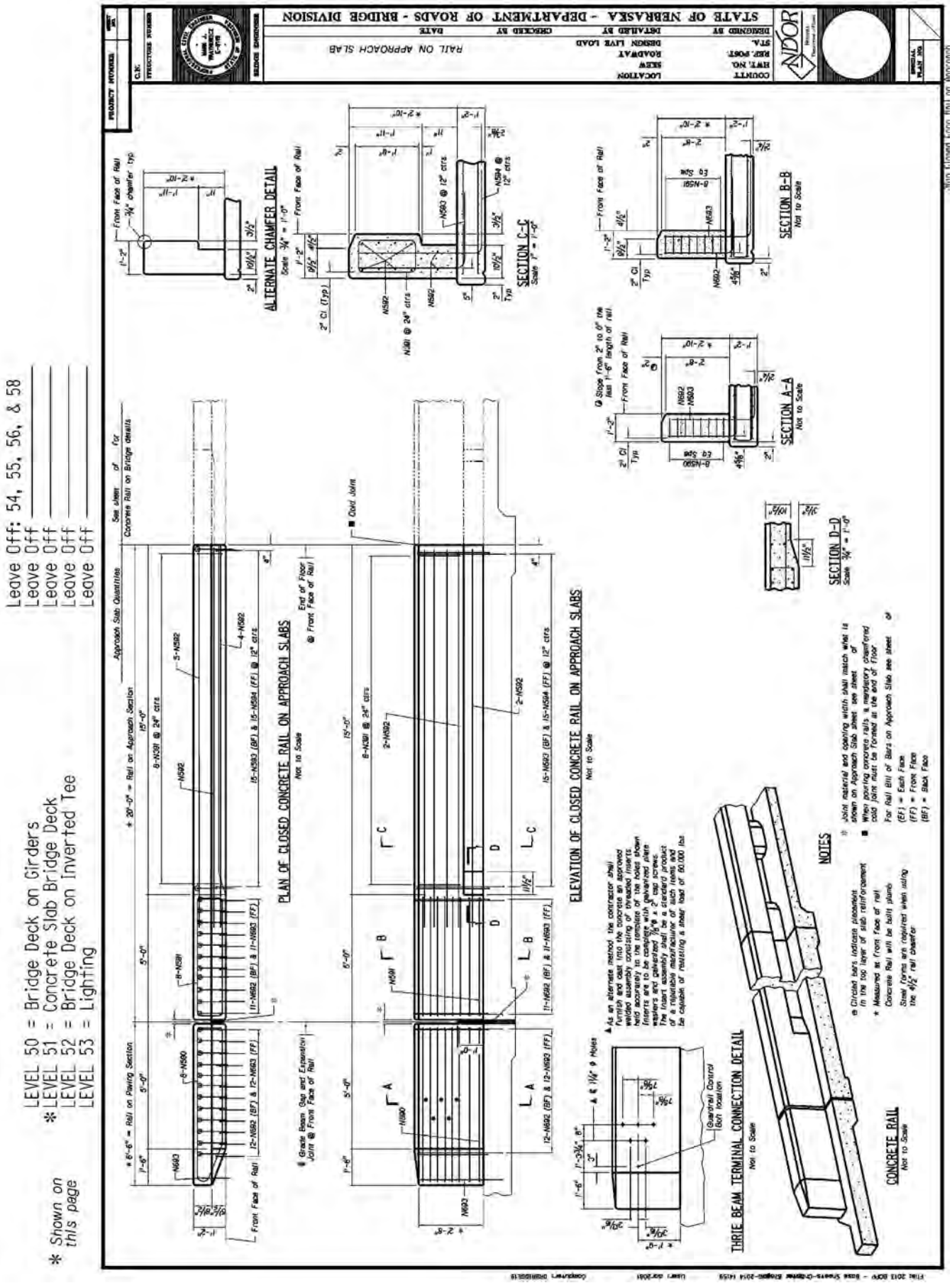
STATE OF NEBRASKA - DEPARTMENT OF ROADS - BRIDGE DIVISION
RAIL ON APPROACH SLAB
ALTERNATE CHAMFER DETAIL
SECTION C-C
SECTION B-B
SECTION A-A
SECTION D-D
PLAN OF CLOSED CONCRETE RAIL ON APPROACH SLABS
ELEVATION OF CLOSED CONCRETE RAIL ON APPROACH SLABS
THRIE BEAM TERMINAL CONNECTION DETAIL
CONCRETE RAIL
NOTES
Leave Off: 54, 55, 56, & 58
Leave Off
Leave Off
Leave Off
Leave Off
Leave Off
LEVEL 50 = Bridge Deck on Girders
*LEVEL 51 = Concrete Slab Bridge Deck
LEVEL 52 = Bridge Deck on Inverted Tee
LEVEL 53 = Lighting
* Shown on this page

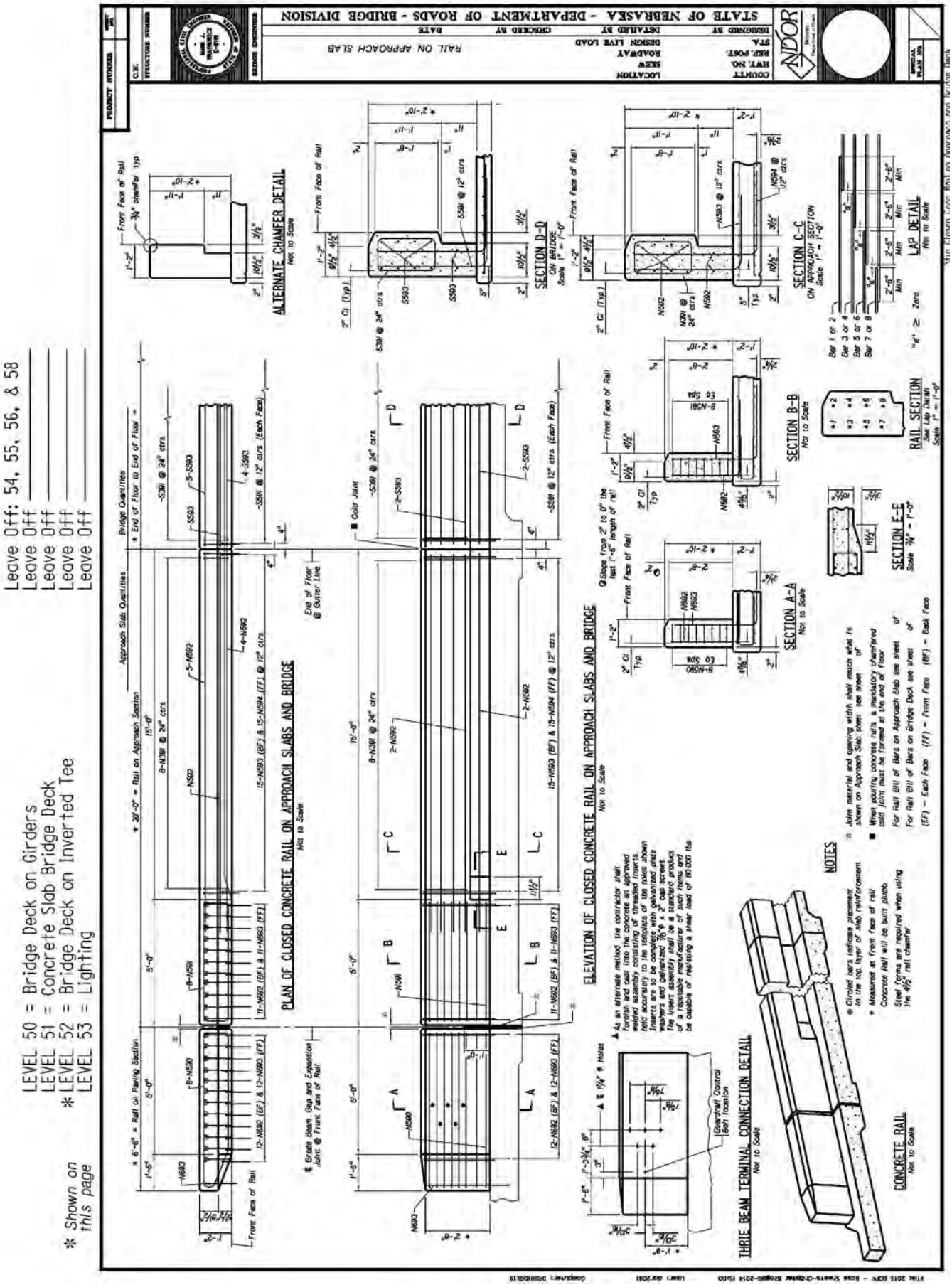
STATE OF NEBRASKA - DEPARTMENT OF ROADS - BRIDGE DIVISION
RAIL ON APPROACH SLAB
ALTERNATE CHAMFER DETAIL
Not to Scale
SECTION D-D
ON BRIDGE
SECTION C-C
ON APPROACH SECTION
LAP DETAIL
Not to Scale
SECTION B-B
Not to Scale
RAIL SECTION
SECTION A-A
Not to Scale
SECTION E-E
PLAN OF CLOSED CONCRETE RAIL ON APPROACH SLABS AND BRIDGE
Not to Scale
ELEVATION OF CLOSED CONCRETE RAIL ON APPROACH SLABS AND BRIDGE
Not to Scale
NOTES
THRIE BEAM TERMINAL CONNECTION DETAIL
Not to Scale
CONCRETE RAIL
Not to Scale
LEVEL 50 = Bridge Deck on Girders
LEVEL 51 = Concrete Slab Bridge Deck
* LEVEL 52 = Bridge Deck on Inverted Tee
LEVEL 53 = Lighting
* Shown on this page
Leave Off: 54, 55, 56, & 58
Leave Off
Leave Off
Leave Off
Leave Off
Leave Off

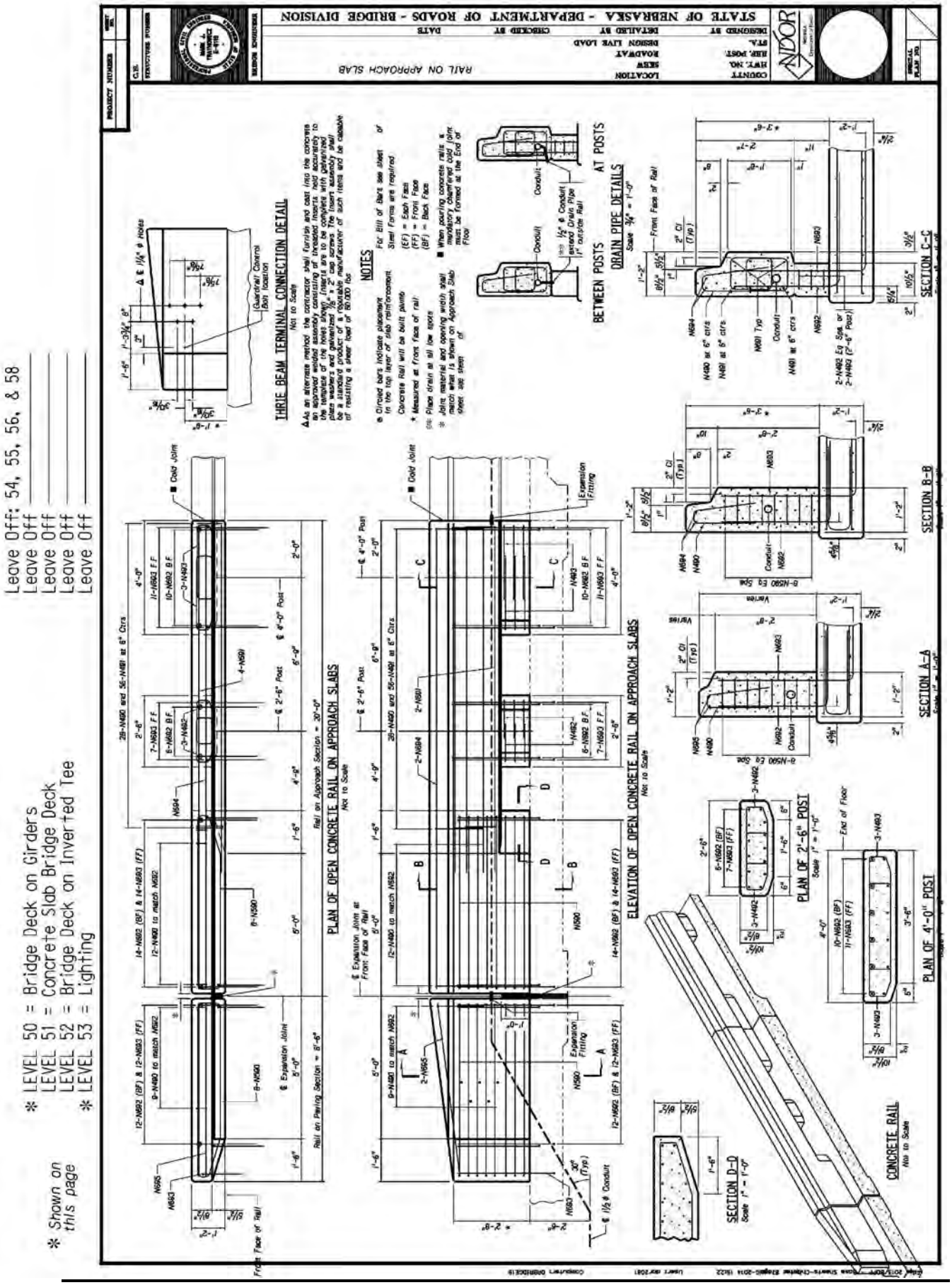
STATE OF NEBRASKA - DEPARTMENT OF ROADS - BRIDGE DIVISION
RAIL ON APPROACH SLAB
THRIE BEAM TERMINAL CONNECTION DETAIL
Not to Scale
NOTES
BETWEEN POSTS
AT POSTS
DRAIN PIPE DETAILS
SECTION C-C
SECTION B-B
SECTION A-A
PLAN OF OPEN CONCRETE RAIL ON APPROACH SLABS
Not to Scale
ELEVATION OF OPEN CONCRETE RAIL ON APPROACH SLABS
Not to Scale
PLAN OF 2'-6" POST
PLAN OF 4'-0" POST
SECTION D-D
CONCRETE RAIL
Not to Scale
Leave Off: 54, 55, 56, & 58
Leave Off
Leave Off
Leave Off
Leave Off
* LEVEL 50 = Bridge Deck on Girders
LEVEL 51 = Concrete Slab Bridge Deck
LEVEL 52 = Bridge Deck on Inverted Tee
* LEVEL 53 = Lighting
* Shown on this page

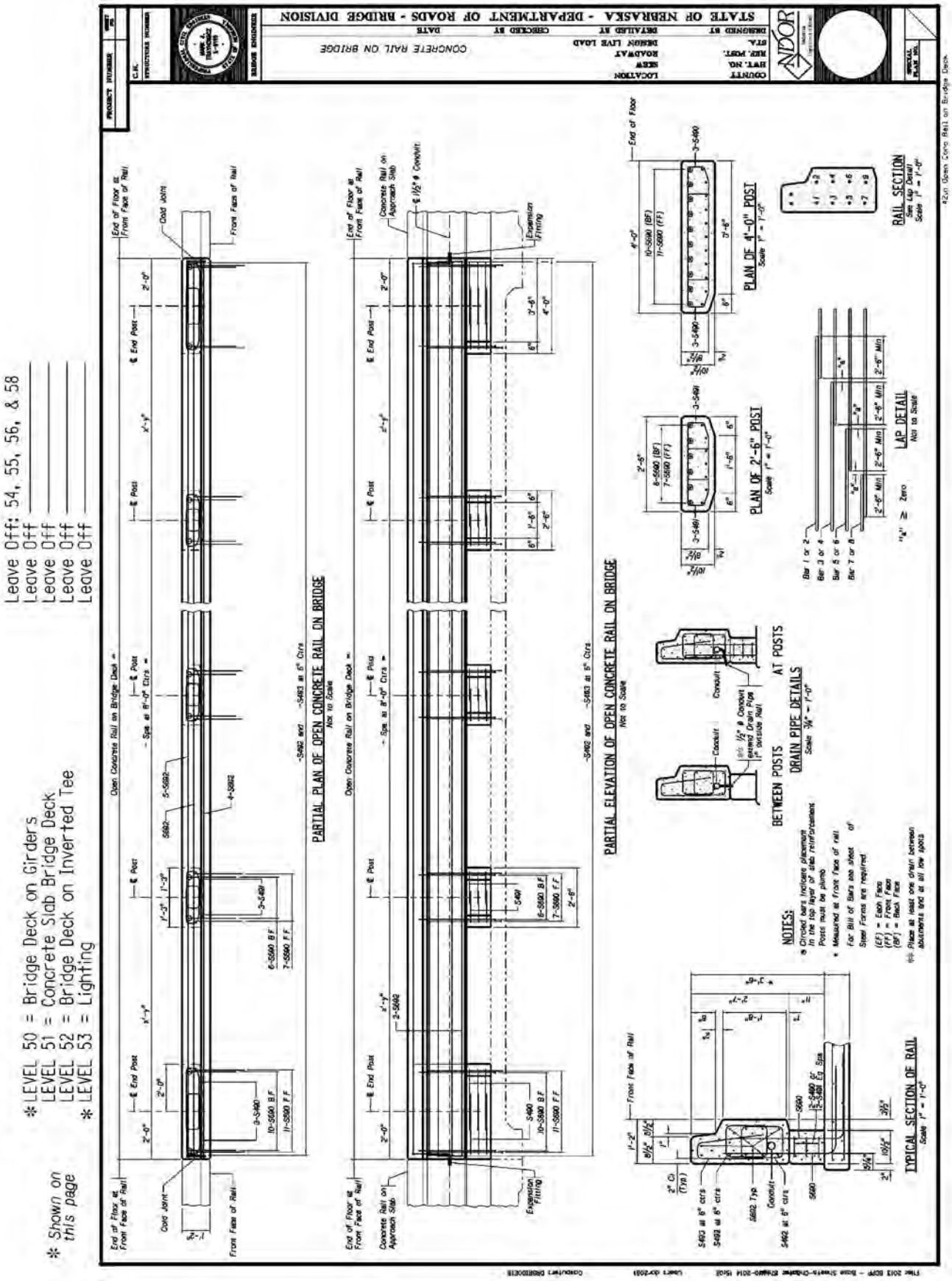
STATE OF NEBRASKA - DEPARTMENT OF ROADS - BRIDGE DIVISION
CONCRETE RAIL ON BRIDGE
PARTIAL PLAN OF OPEN CONCRETE RAIL ON BRIDGE
Not to Scale
PARTIAL ELEVATION OF OPEN CONCRETE RAIL ON BRIDGE
Not to Scale
PLAN OF 4'-0" POST
Scale 1" = 1'-0"
PLAN OF 2'-6" POST
Scale 1" = 1'-0"
RAIL SECTION
See Lap Detail
Scale 1" = 1'-0"
LAP DETAIL
Not to Scale
BETWEEN POSTS
AT POSTS
DRAIN PIPE DETAILS
Scale 3/4" = 1'-0"
TYPICAL SECTION OF RAIL
Scale 1" = 1'-0"
NOTES:
* Shown on this page
* LEVEL 50 = Bridge Deck on Girders
LEVEL 51 = Concrete Slab Bridge Deck
LEVEL 52 = Bridge Deck on Inverted Tee
* LEVEL 53 = Lighting
Leave Off: 54, 55, 56, & 58
Leave Off
Leave Off
Leave Off
Leave Off
Leave Off

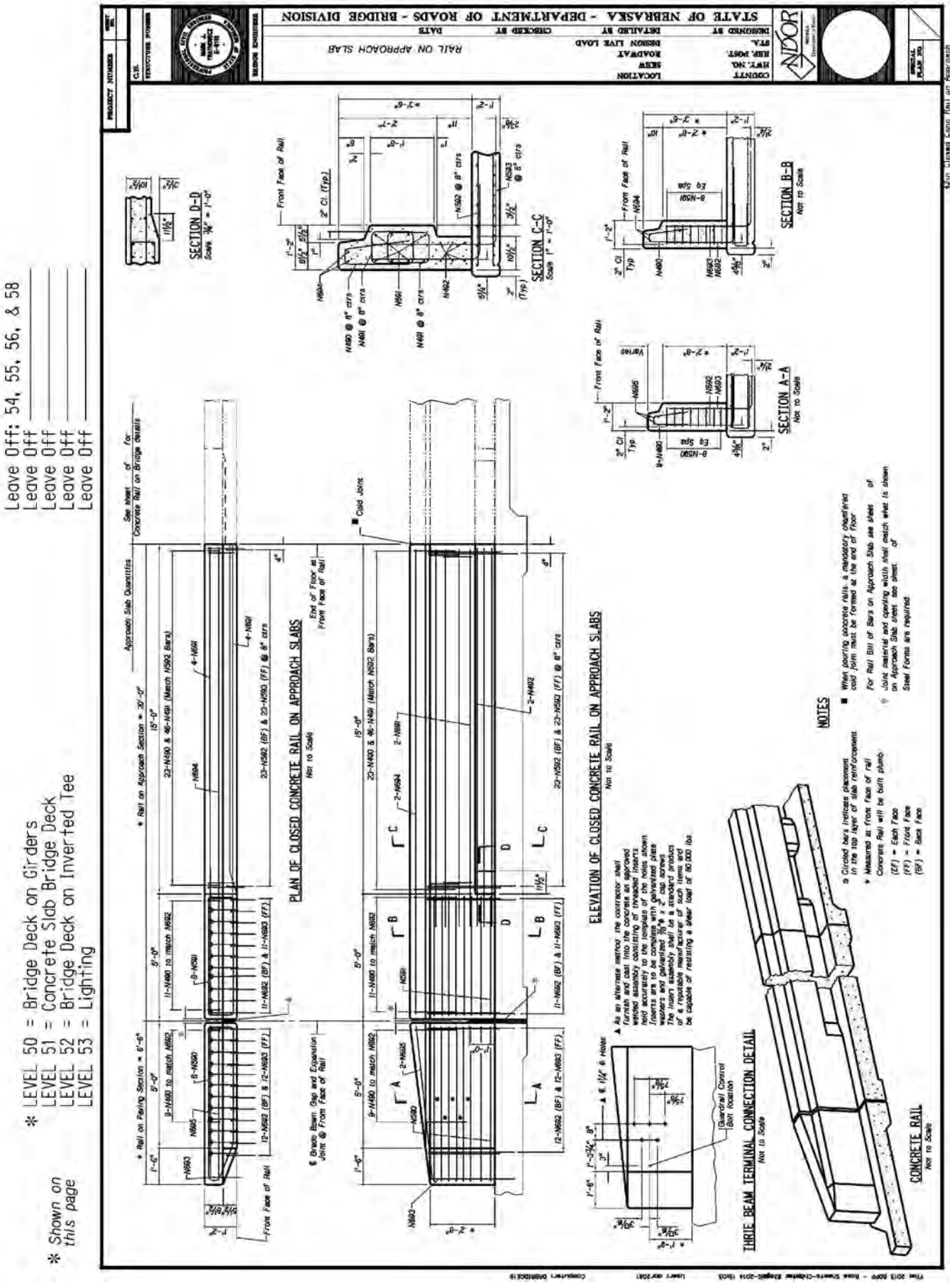
STATE OF NEBRASKA - DEPARTMENT OF ROADS - BRIDGE DIVISION
RAIL ON APPROACH SLAB
PLAN OF CLOSED CONCRETE RAIL ON APPROACH SLABS
Not to Scale
ELEVATION OF CLOSED CONCRETE RAIL ON APPROACH SLABS
Not to Scale
SECTION A-A
Not to Scale
SECTION B-B
Not to Scale
SECTION C-C
Scale 1" = 1'-0"
SECTION D-D
Scale 3/4" = 1'-0"
THRIE BEAM TERMINAL CONNECTION DETAIL
Not to Scale
CONCRETE RAIL
Not to Scale
NOTES
Leave Off: 54, 55, 56, & 58
Leave Off
Leave Off
Leave Off
Leave Off
* LEVEL 50 = Bridge Deck on Girders
LEVEL 51 = Concrete Slab Bridge Deck
LEVEL 52 = Bridge Deck on Inverted Tee
LEVEL 53 = Lighting
* Shown on this page

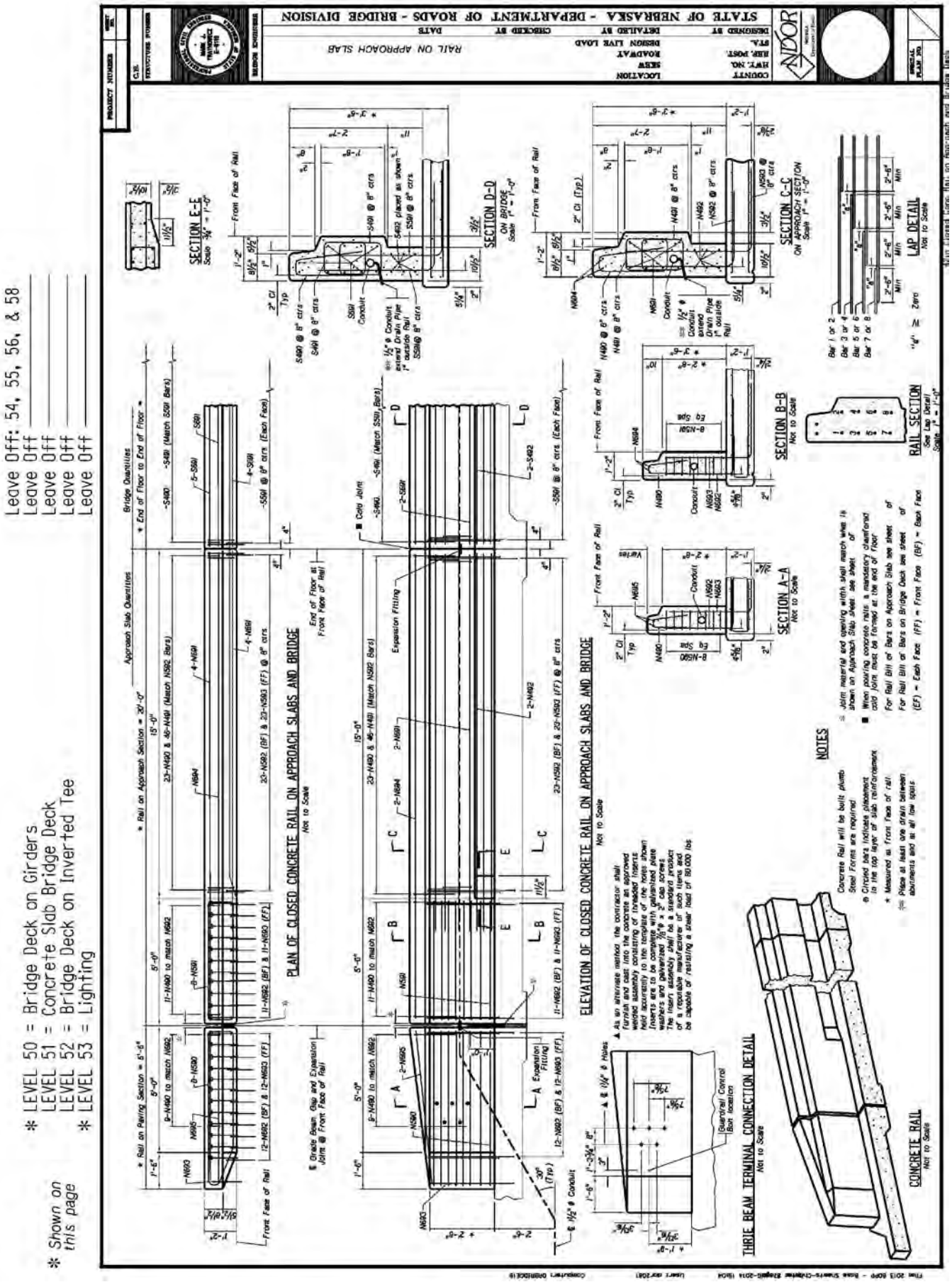
STATE OF NEBRASKA - DEPARTMENT OF ROADS - BRIDGE DIVISION
RAIL ON APPROACH SLAB
PLAN OF CLOSED CONCRETE RAIL ON APPROACH SLABS AND BRIDGE
Not to Scale
ELEVATION OF CLOSED CONCRETE RAIL ON APPROACH SLABS AND BRIDGE
Not to Scale
SECTION E-E
SECTION D-D
ON BRIDGE
SECTION C-C
ON APPROACH SECTION
SECTION B-B
Not to Scale
SECTION A-A
Not to Scale
LAP DETAIL
Not to Scale
RAIL SECTION
THRIE BEAM TERMINAL CONNECTION DETAIL
Not to Scale
CONCRETE RAIL
Not to Scale
NOTES
Bridge Quantities
Approach Slab Quantities
Leave Off: 54, 55, 56, & 58
Leave Off
Leave Off
Leave Off
Leave Off
* LEVEL 50 = Bridge Deck on Girders
LEVEL 51 = Concrete Slab Bridge Deck
LEVEL 52 = Bridge Deck on Inverted Tee
* LEVEL 53 = Lighting
* Shown on this page

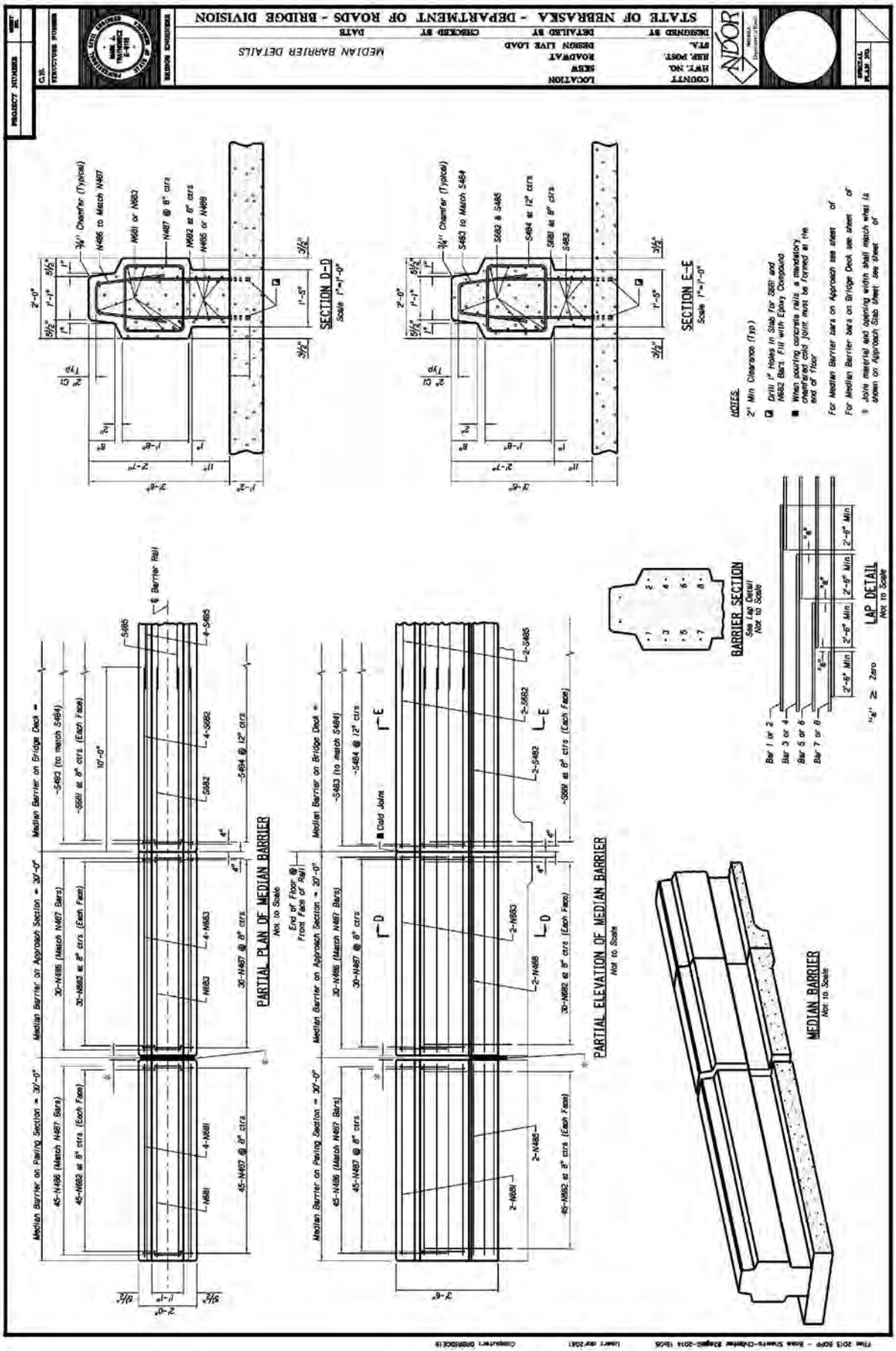
STATE OF NEBRASKA - DEPARTMENT OF ROADS - BRIDGE DIVISION
MEDIAN BARRIER DETAILS
SECTION D-D
Scale 1"=1'-0"
SECTION E-E
Scale 1"=1'-0"
NOTES:
2" Min Clearance (Typ.)
Drill 1" Holes in Slab for S681 and N682 Bars. Fill with Epoxy Compound
When pouring concrete rails a mandatory chamfered cold joint must be formed at the end of floor
For Median Barrier bars on Approach see sheet of
For Median Barrier bars on Bridge Deck see sheet of
Joint material and opening width shall match what is shown on Approach Slab Sheet see sheet of
PARTIAL PLAN OF MEDIAN BARRIER
Not to Scale
PARTIAL ELEVATION OF MEDIAN BARRIER
Not to Scale
BARRIER SECTION
See Lap Detail
Not to Scale
LAP DETAIL
Not to Scale
MEDIAN BARRIER
Not to Scale

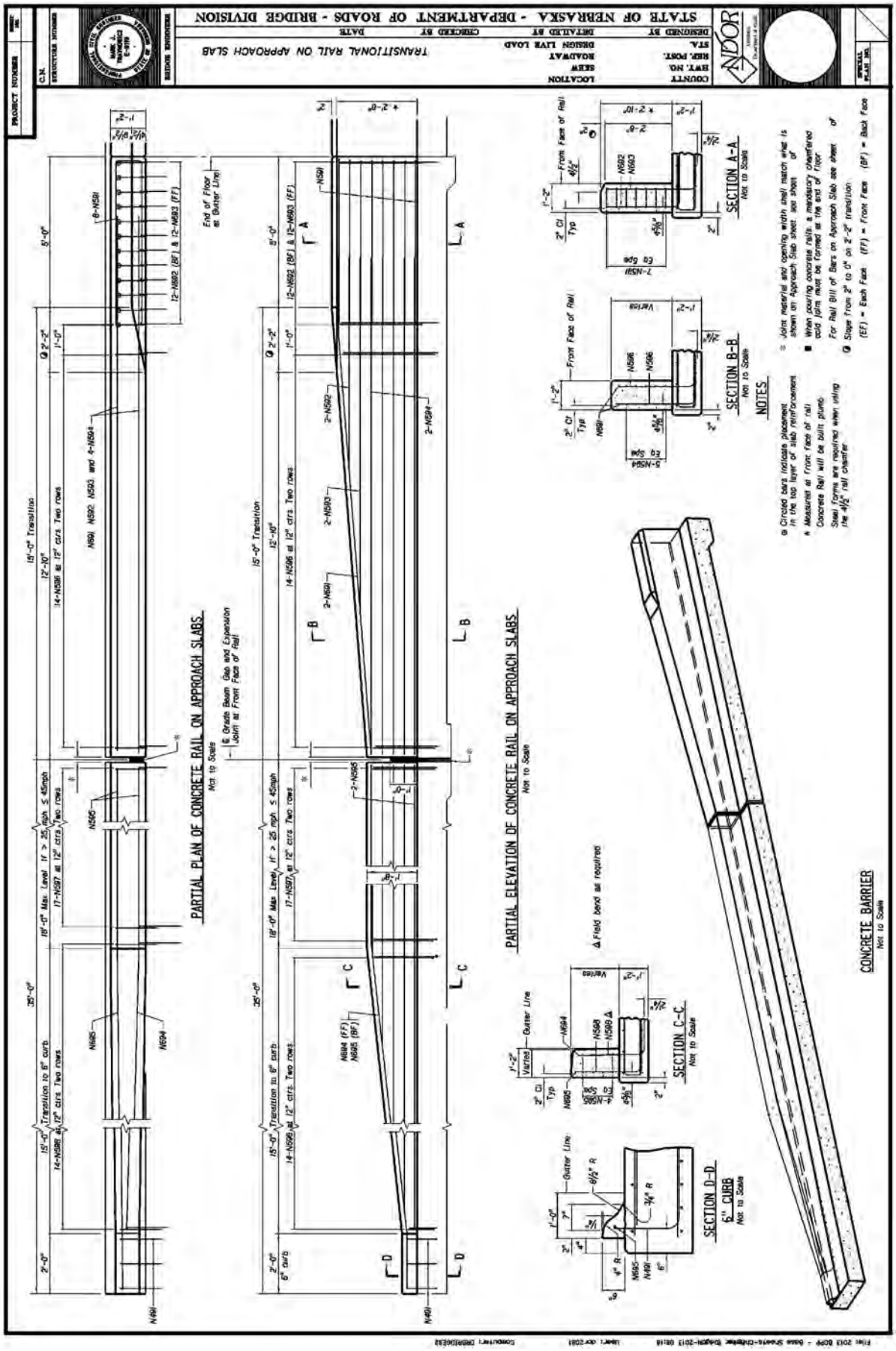
STATE OF NEBRASKA - DEPARTMENT OF ROADS - BRIDGE DIVISION
TRANSITIONAL RAIL ON APPROACH SLAB
PARTIAL PLAN OF CONCRETE RAIL ON APPROACH SLABS
Not to Scale
PARTIAL ELEVATION OF CONCRETE RAIL ON APPROACH SLABS
Not to Scale
SECTION A-A
Not to Scale
SECTION B-B
Not to Scale
SECTION C-C
Not to Scale
SECTION D-D
6" CURB
Not to Scale
CONCRETE BARRIER
Not to Scale
NOTES
Circled bars indicate placement in the top layer of slab reinforcement.
* Measured at front face of rail
Concrete Rail will be built plumb.
Steel forms are required when using the 4½" rail chamfer
Joint material and opening width shall match what is shown on Approach Slab sheet, see sheet
When pouring concrete rails, a mandatory chamfered cold joint must be formed at the end of Floor
For Rail Bill of Bars on Approach Slab see sheet
Slope from 2" to 0" on 2'-2" transition
(EF) = Each Face (FF) = Front Face (BF) = Back Face
End of Floor at Gutter Line
Expansion Joint at Front Face of Rail
Field bend as required
Gutter Line
Front Face of Rail
Varies
Eq Spa
Typ
Cl
15'-0" Transition
12'-10"
14-N586 at 12" ctrs. Two rows
17-N587 at 12" ctrs. Two rows
18'-0" Max. Level if > 35 mph ≤ 45mph
Transition to 6" curb
14-N588 at 12" ctrs. Two rows
25'-0"
2'-0"
6" curb
12-N692 (BF) & 12-N693 (FF)
N691 N692 N693 and 4-N694
8-N691
N695
N694
N696
N697
N698
N699
N691
N692
N693
N694
N695
N696
N697
N698
N699
N691
N692
N693
N694
N695
N696
N697
N698
N699
LEVEL 53 = Lighting
* Shown on this page

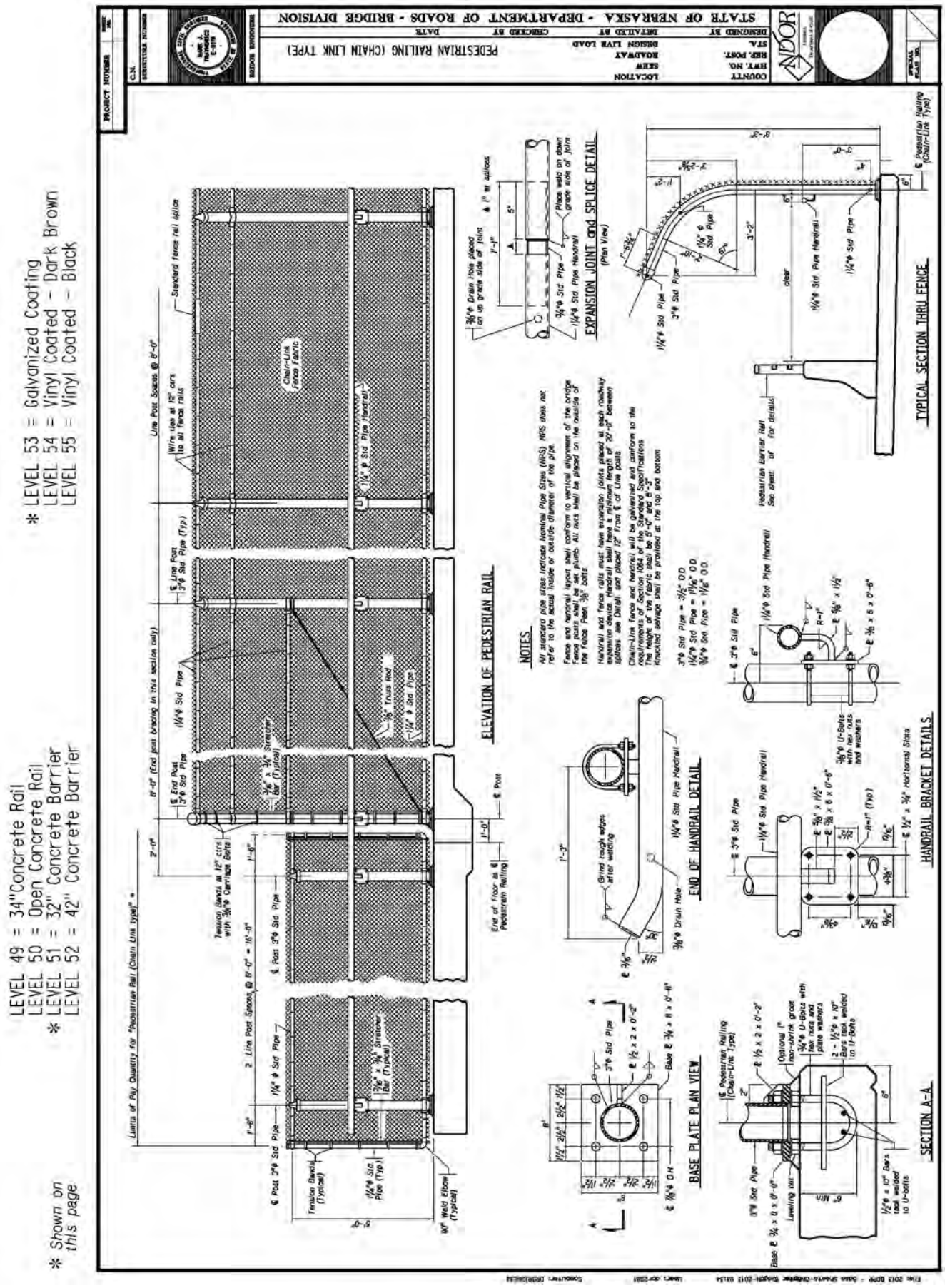
STATE OF NEBRASKA - DEPARTMENT OF ROADS - BRIDGE DIVISION
PEDESTRIAN RAILING (CHAIN LINK TYPE)
ELEVATION OF PEDESTRIAN RAIL
NOTES
EXPANSION JOINT and SPLICE DETAIL
TYPICAL SECTION THRU FENCE
END OF HANDRAIL DETAIL
HANDRAIL BRACKET DETAILS
BASE PLATE PLAN VIEW
SECTION A-A
LEVEL 49 = 34"Concrete Rail
LEVEL 50 = Open Concrete Rail
* LEVEL 51 = 32" Concrete Barrier
LEVEL 52 = 42" Concrete Barrier
* LEVEL 53 = Galvanized Coating
LEVEL 54 = Vinyl Coated - Dark Brown
LEVEL 55 = Vinyl Coated - Black
* Shown on this page

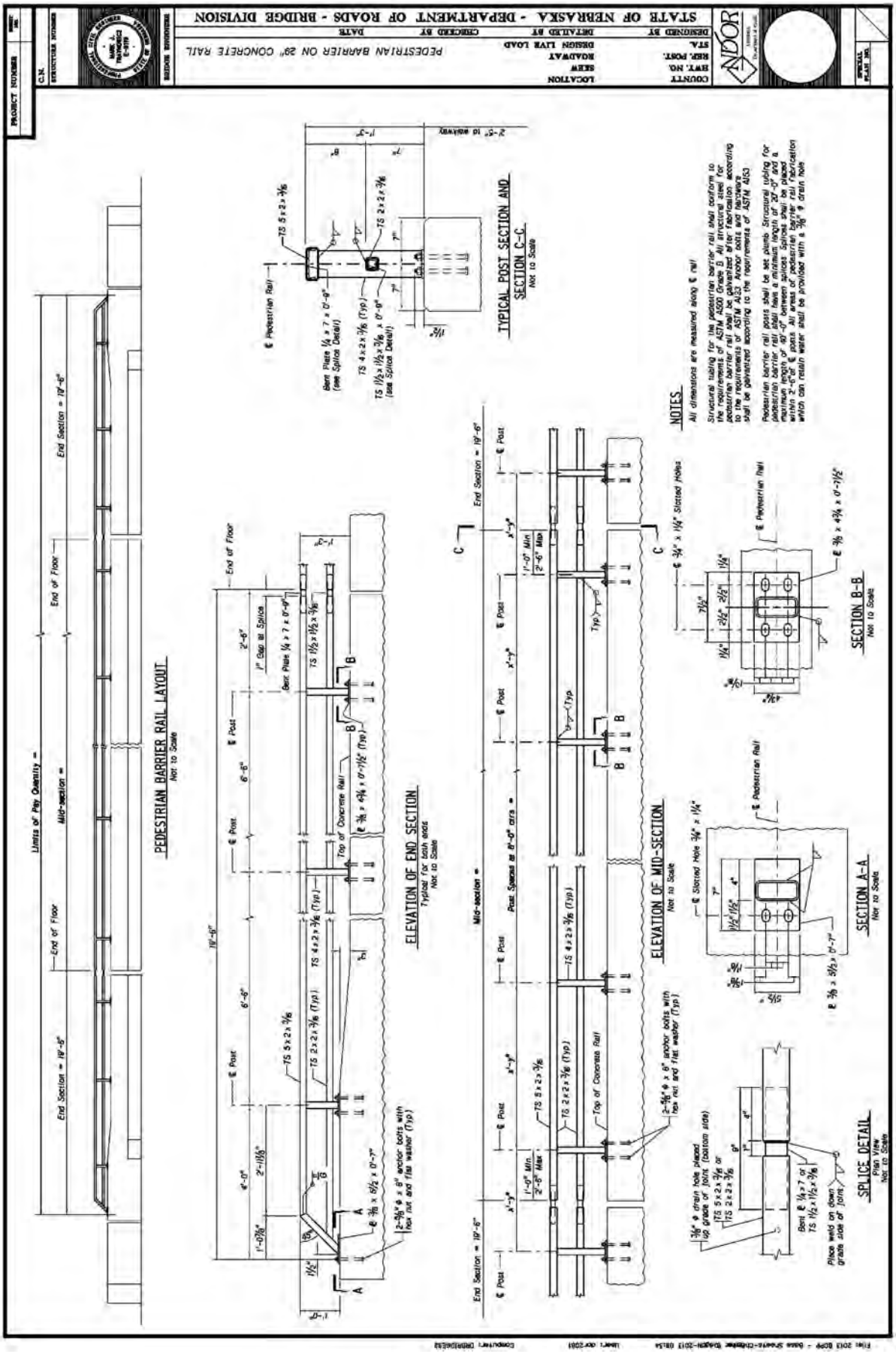
STATE OF NEBRASKA - DEPARTMENT OF ROADS - BRIDGE DIVISION
PEDESTRIAN BARRIER ON 28" CONCRETE RAIL
PEDESTRIAN BARRIER RAIL LAYOUT
Not to Scale
ELEVATION OF END SECTION
Typical for both ends
Not to Scale
ELEVATION OF MID-SECTION
Not to Scale
TYPICAL POST SECTION AND SECTION C-C
Not to Scale
SECTION B-B
Not to Scale
SECTION A-A
Not to Scale
SPLICE DETAIL
Plan View
Not to Scale
NOTES
All dimensions are measured along ℄ rail
Structural tubing for the pedestrian barrier rail shall conform to the requirements of ASTM A500 Grade B. All structural steel for pedestrian barrier rail shall be galvanized after fabrication according to the requirements of ASTM A153. Anchor bolts and hardware shall be galvanized according to the requirements of ASTM A153.
Pedestrian barrier rail posts shall be set plumb. Structural tubing for pedestrian barrier rail shall have a minimum length of 7'-0" and a maximum length of 8'-0" between posts. Splice rail posts within 2'-6"of ℄ posts. All areas of pedestrian barrier rail fabrication which can retain water shall be provided with a 3/16" ϕ drain hole.

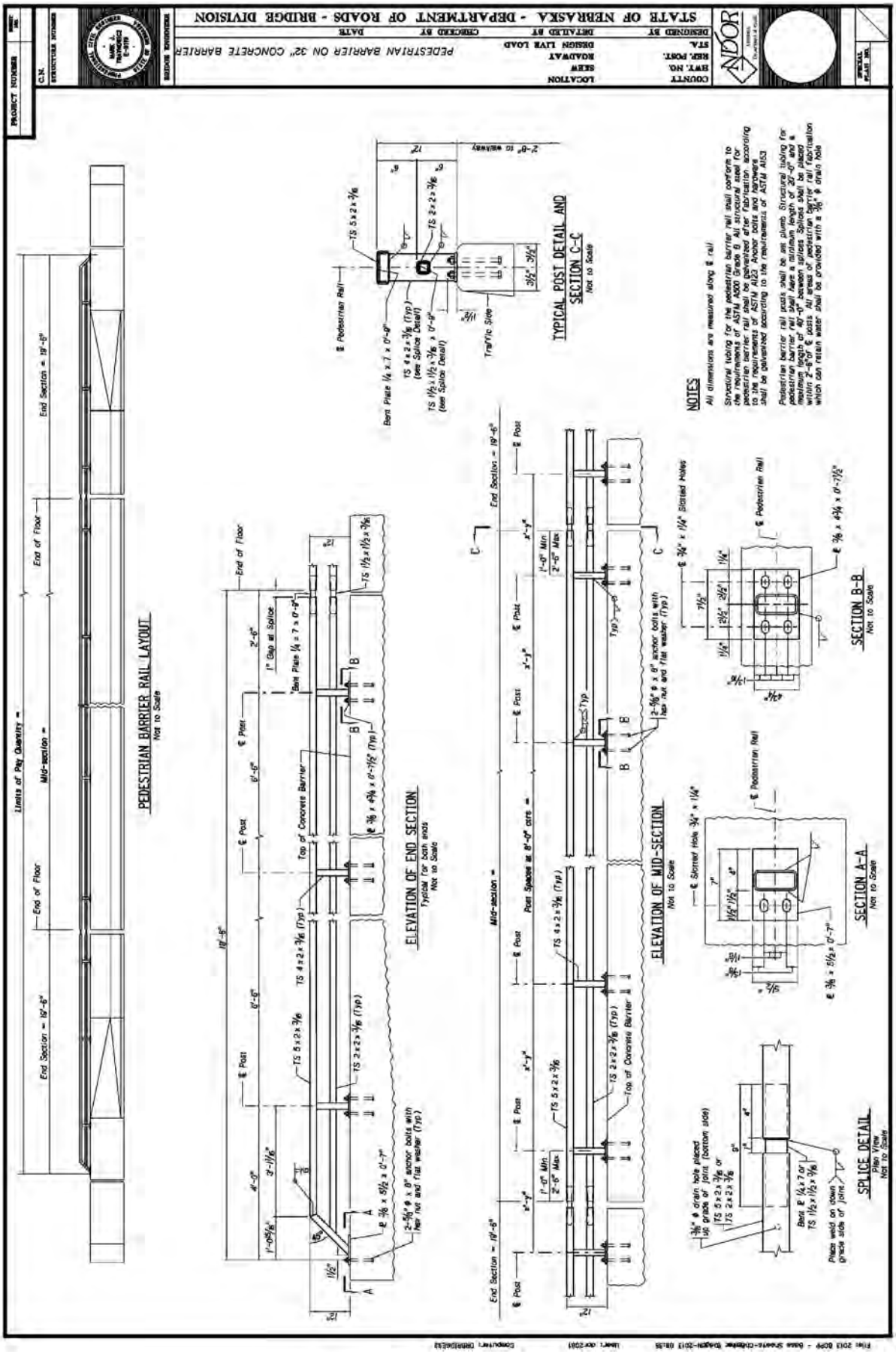
STATE OF NEBRASKA - DEPARTMENT OF ROADS - BRIDGE DIVISION
PEDESTRIAN BARRIER ON 32" CONCRETE BARRIER
PEDESTRIAN BARRIER RAIL LAYOUT
Not to Scale
ELEVATION OF END SECTION
Typical for both ends
Not to Scale
ELEVATION OF MID-SECTION
Not to Scale
TYPICAL POST DETAIL AND
SECTION C-C
Not to Scale
SECTION B-B
Not to Scale
SECTION A-A
Not to Scale
SPLICE DETAIL
Plan View
Not to Scale
NOTES
All dimensions are measured along ℄ rail
Structural tubing for the pedestrian barrier rail shall conform to the requirements of ASTM A500 Grade B. All structural steel for pedestrian barrier rail shall be galvanized after fabrication according to the requirements of ASTM A123. Anchor bolts and hardware shall be galvanized according to the requirements of ASTM A153.
Pedestrian barrier rail posts shall be set plumb. Structural tubing for pedestrian barrier rail shall have a minimum length of 20'-0" and a maximum length of 40'-0" between splices. Splices shall be placed within 2'-6" of ℄ posts. All areas of pedestrian barrier rail fabrication which can retain water shall be provided with a 3/8" ϕ drain hole.

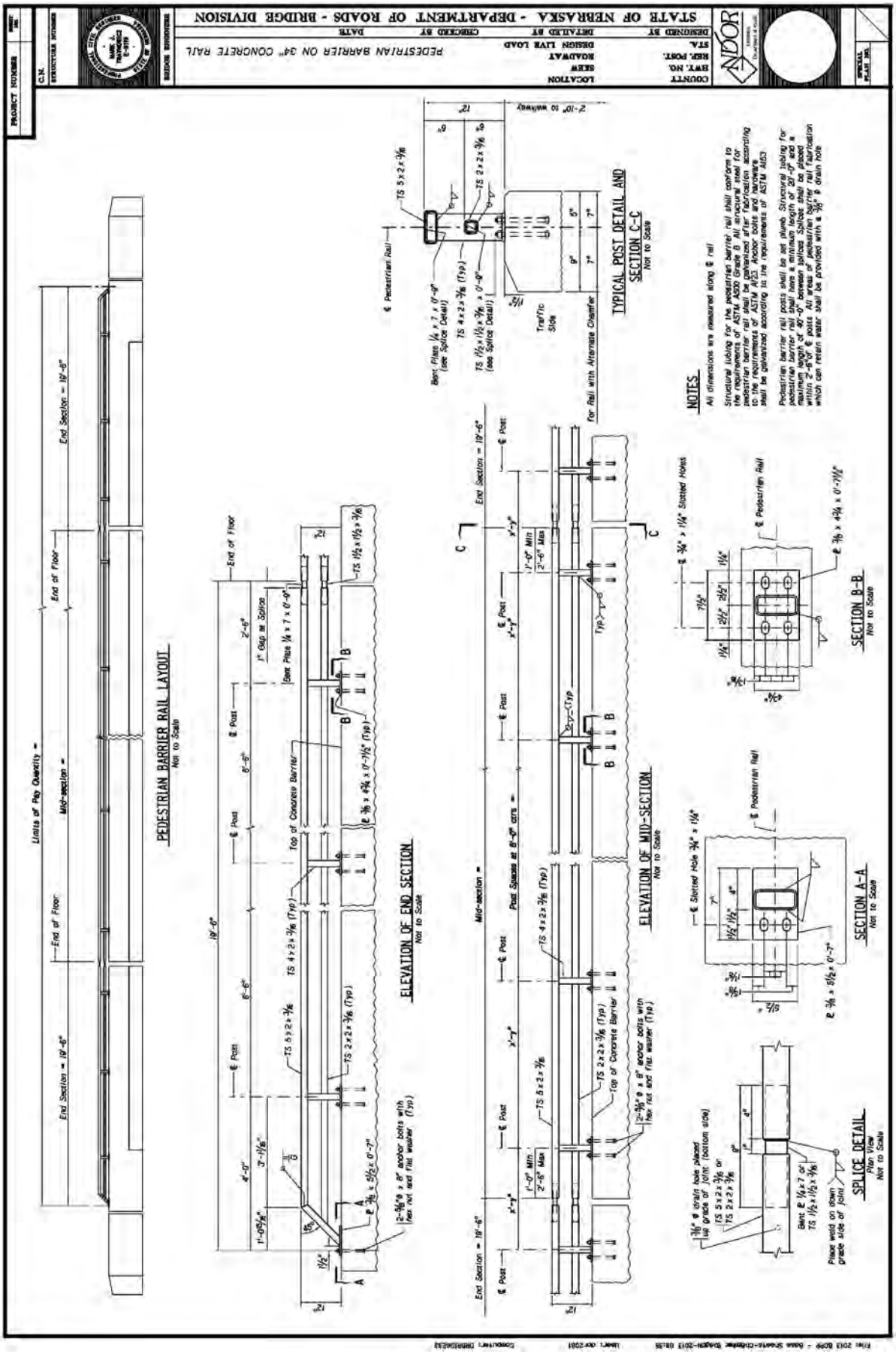
STATE OF NEBRASKA - DEPARTMENT OF ROADS - BRIDGE DIVISION
PEDESTRIAN BARRIER ON 34" CONCRETE RAIL
PEDESTRIAN BARRIER RAIL LAYOUT
Not to Scale
ELEVATION OF END SECTION
Not to Scale
ELEVATION OF MID-SECTION
Not to Scale
TYPICAL POST DETAIL AND SECTION C-C
Not to Scale
SECTION B-B
Not to Scale
SECTION A-A
Not to Scale
SPLICE DETAIL
Plan View
Not to Scale
NOTES
All dimensions are measured along ℄ rail
Structural tubing for the pedestrian barrier rail shall conform to the requirements of ASTM A500 Grade B. All structural steel for pedestrian barrier rail shall be galvanized after fabrication according to the requirements of ASTM A123. Anchor bolts and hardware shall be galvanized according to the requirements of ASTM A153.
Pedestrian barrier rail posts shall be set plumb. Structural tubing for pedestrian barrier rail shall have a minimum length of 20'-0" and a maximum length of 40'-0" between splices. Splices shall be placed within 2'-6"Ø ℄ posts. All areas of pedestrian barrier rail fabrication which can retain water shall be provided with a 3/8" ϕ drain hole.

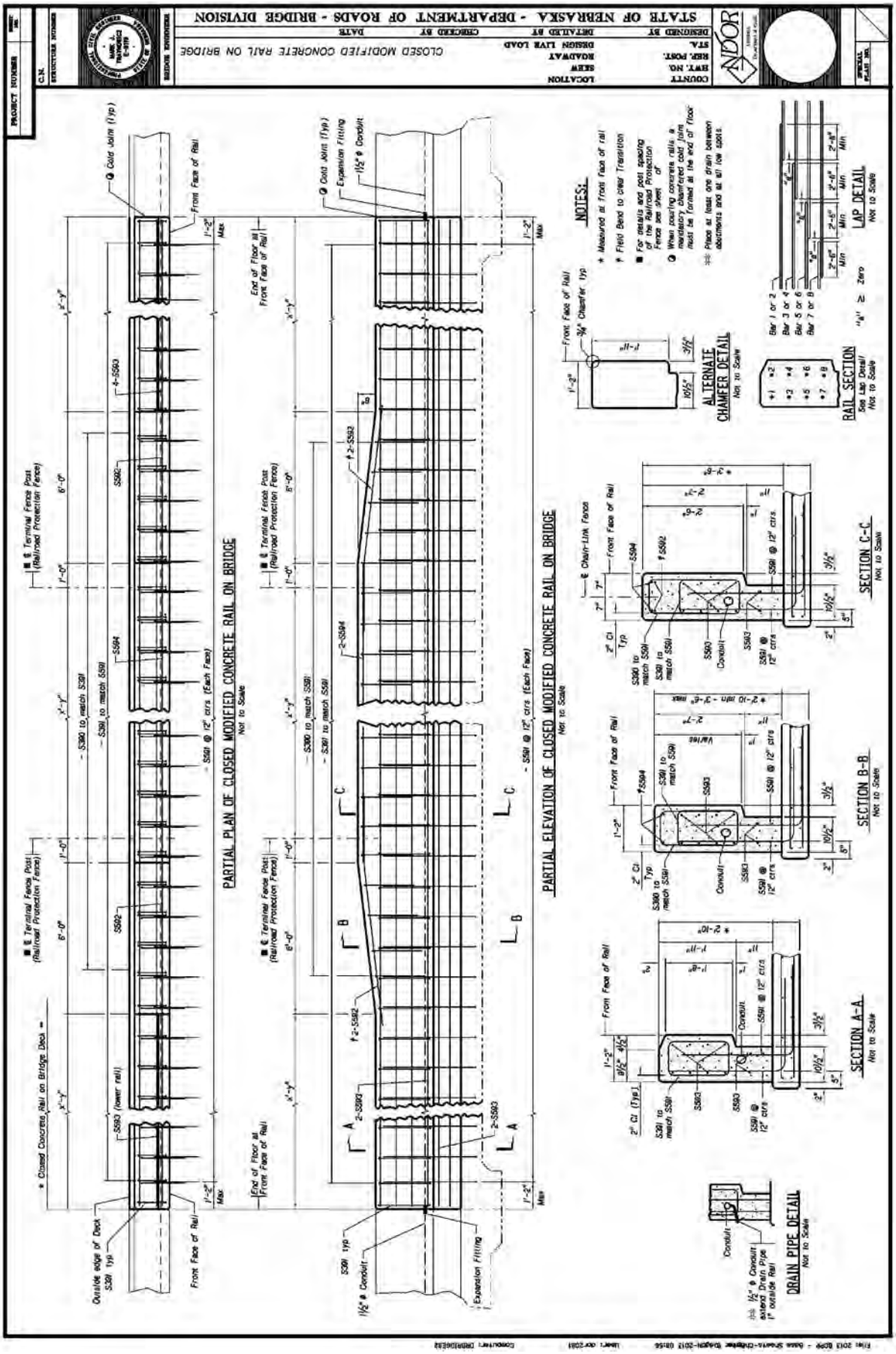
STATE OF NEBRASKA - DEPARTMENT OF ROADS - BRIDGE DIVISION
CLOSED MODIFIED CONCRETE RAIL ON BRIDGE
PARTIAL PLAN OF CLOSED MODIFIED CONCRETE RAIL ON BRIDGE
Not to Scale
PARTIAL ELEVATION OF CLOSED MODIFIED CONCRETE RAIL ON BRIDGE
Not to Scale
NOTES:
* Measured at front face of rail
† Field Bend to clear Transition
■ For details and post spacing of the Railroad Protection Fence see sheet
● When pouring concrete rails a mandatory chamfered cold joint must be formed at the end of floor
Place as least one drain between abutments and at all low spots.
ALTERNATE CHAMFER DETAIL
Not to Scale
RAIL SECTION
See Lap Detail
Not to Scale
LAP DETAIL
Not to Scale
SECTION A-A
Not to Scale
SECTION B-B
Not to Scale
SECTION C-C
Not to Scale
DRAIN PIPE DETAIL
Not to Scale
* LEVEL 50 = Bridge Deck on Girders
LEVEL 51 = Concrete Slab Bridge Deck
LEVEL 52 = Bridge Deck on Inverted Tees
* LEVEL 53 = Lighting Details
* Shown on this page

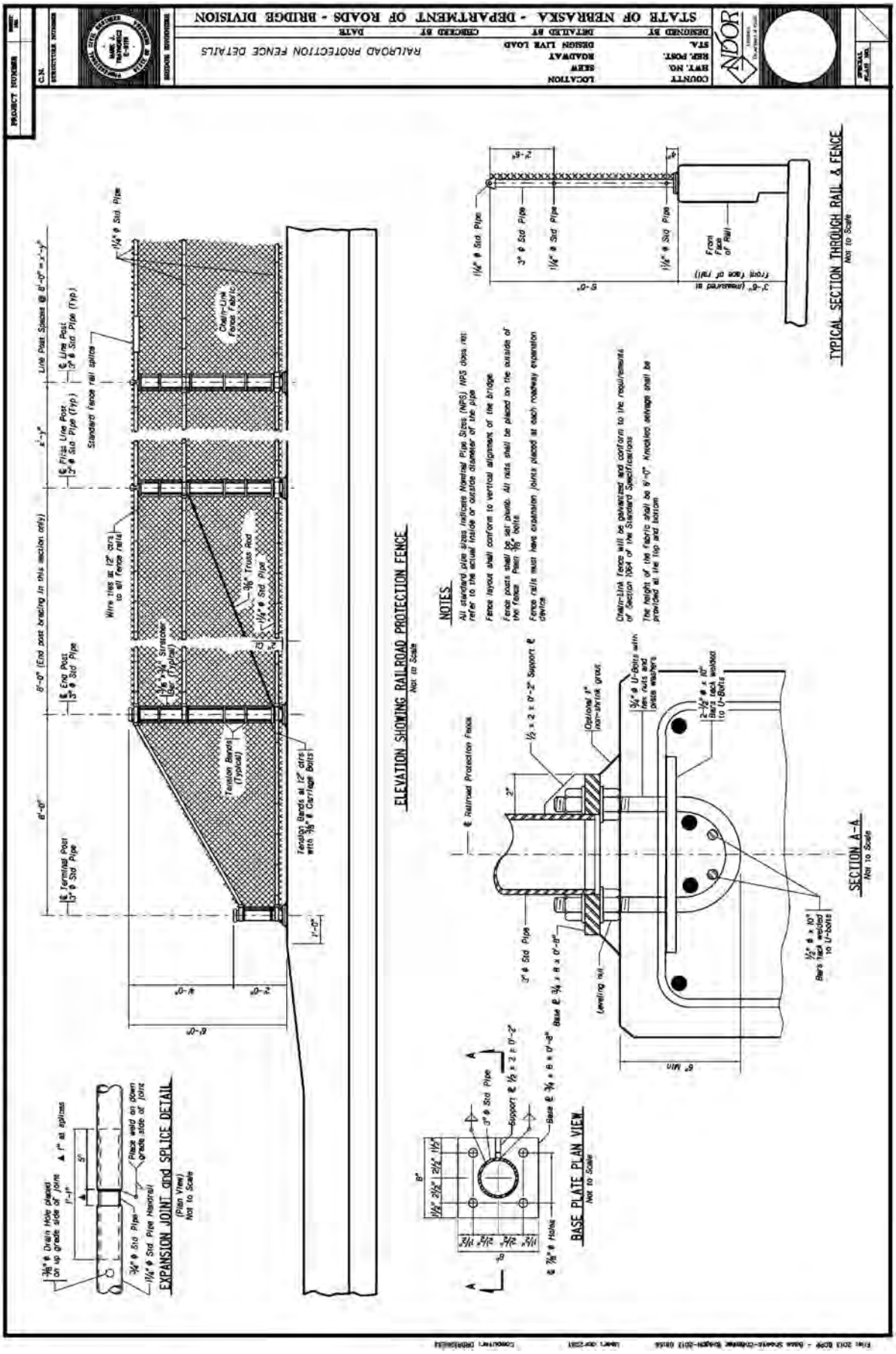

* Shown on this page

* LEVEL 54 = Galvanized coating
LEVEL 55 = Vinyl Coated - Dark Brown
LEVEL 56 = Vinyl Coated - Black

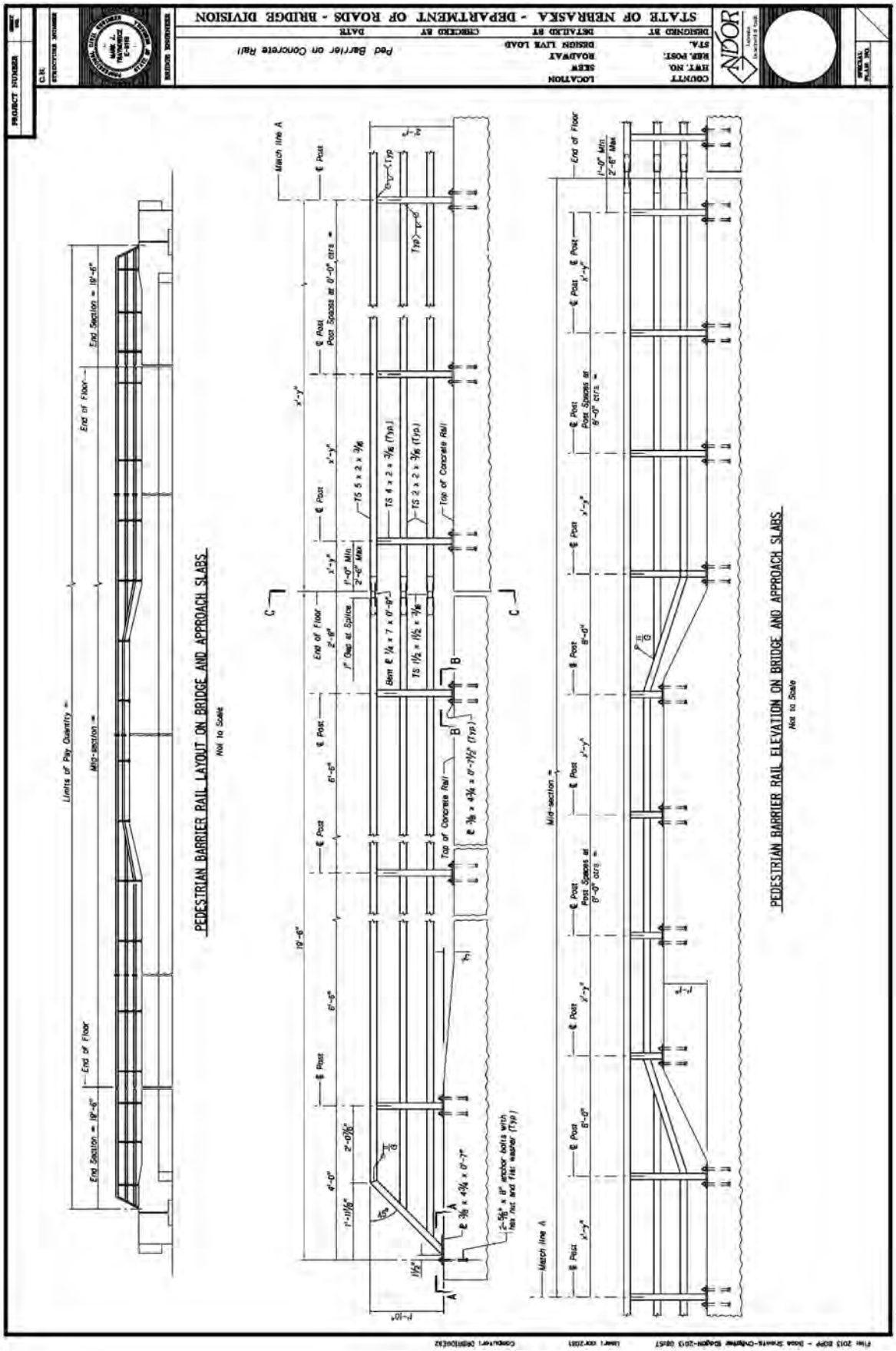
STATE OF NEBRASKA - DEPARTMENT OF ROADS - BRIDGE DIVISION
Ped Barrier on Concrete Rail
PEDESTRIAN BARRIER RAIL LAYOUT ON BRIDGE AND APPROACH SLABS
Not to Scale
PEDESTRIAN BARRIER RAIL ELEVATION ON BRIDGE AND APPROACH SLABS
Not to Scale
Limits of Pay Quantity =
End Section = 19'-6"
End of Floor
Mid-section =
Match line A
Post Spaces at 8'-0" ctrs =
TS 5 x 2 x 3/8
TS 4 x 2 x 3/8 (Typ.)
TS 3 x 2 x 3/8 (Typ.)
Top of Concrete Rail
1" Gap at Splice
Bent ℄ 1/4 x 7 x 0'-9"
TS 1 1/2 x 1 1/2 x 7/8
℄ 3/8 x 4 3/4 x 0'-7 1/2" (Typ.)
℄ 3/8 x 4 3/4 x 0'-7"
2-5/8" x 8" anchor bolts with hex nut and flat washer (Typ.)
1'-0" Min
2'-6" Max
19'-6"
6'-6"
8'-0"
4'-0"
2'-0 7/8"
1'-11 7/8"
1 1/2"
1'-10"
45°
Typ.

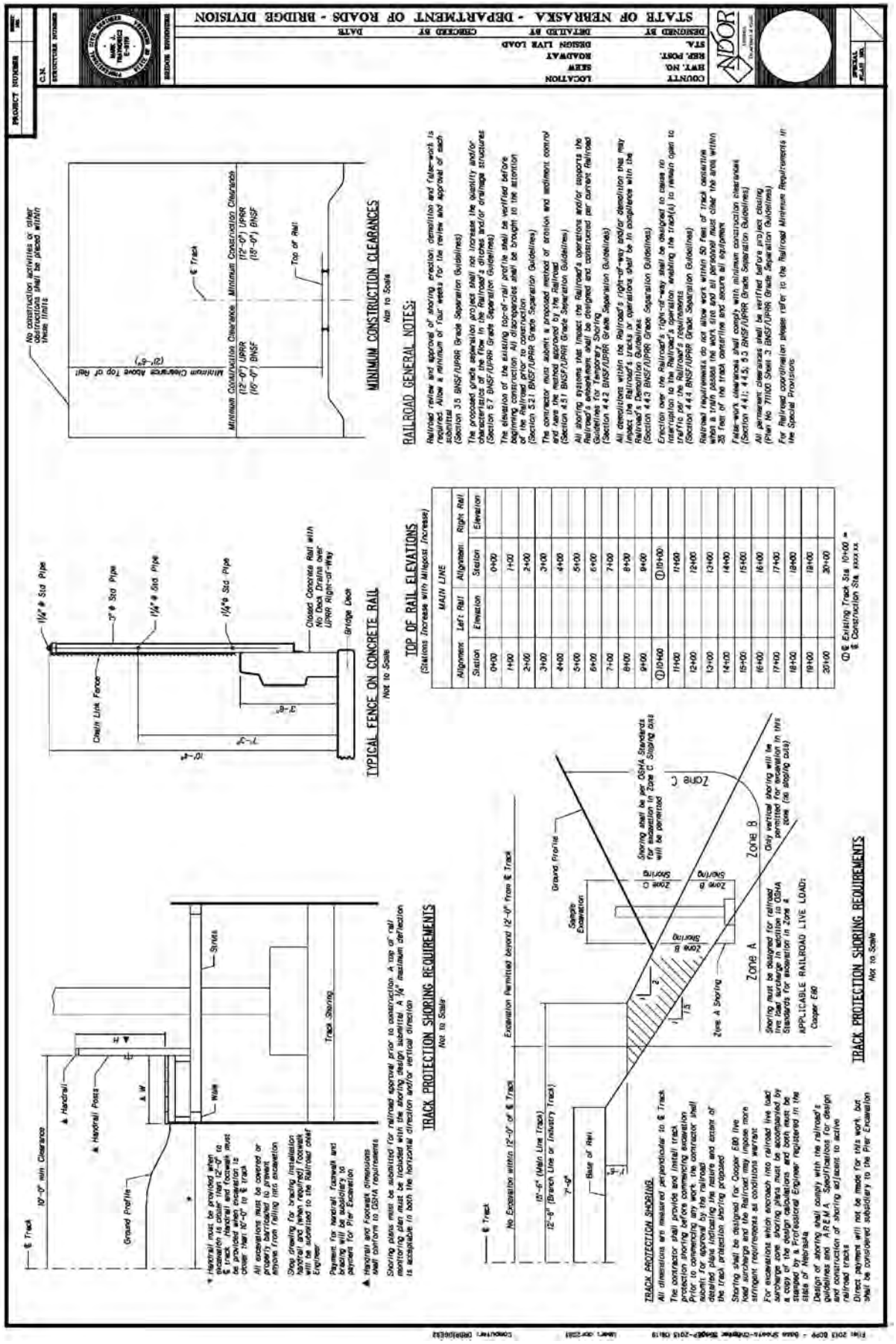
STATE OF NEBRASKA - DEPARTMENT OF ROADS - BRIDGE DIVISION
COUNTY
HWY. NO.
RR. POST.
STA.
LOCATION
SEW
ROADWAY
DESIGN LIVE LOAD
DESIGNED BY
DETAILED BY
CHECKED BY
DATE
PROJECT NUMBER
C.N.
NDOR
MINIMUM CONSTRUCTION CLEARANCES
Not to Scale
RAILROAD GENERAL NOTES:
Railroad review and approval of shoring, erection, demolition and false-work is required. Allow a minimum of four weeks for the review and approval of each submittal (Section 3.5 BNSF/UPRR Grade Separation Guidelines)
The proposed grade separation project shall not increase the quantity and/or characteristics of the flow in the Railroad's ditches and/or drainage structures (Section 5.7 BNSF/UPRR Grade Separation Guidelines)
The elevation of the existing top-of-rail profile shall be verified before beginning construction. All discrepancies shall be brought to the attention of the Railroad prior to construction (Section 5.2.1 BNSF/UPRR Grade Separation Guidelines)
The contractor must submit a proposed method of erosion and sediment control and have the method approved by the Railroad (Section 4.5.1 BNSF/UPRR Grade Separation Guidelines)
All shoring systems that impact the Railroad's operations and/or supports the Railroad's embankment shall be designed and constructed per current Railroad Guidelines for Temporary Shoring (Section 4.4.2 BNSF/UPRR Grade Separation Guidelines)
All demolitions within the Railroad's right-of-way and/or demolition that may impact the Railroad's tracks or operations shall be in compliance with the Railroad's Demolition Guidelines (Section 4.4.3 BNSF/UPRR Grade Separation Guidelines)
Erection over the Railroad's right-of-way shall be designed to cause no interruption to the Railroad's operation, enabling the track(s) to remain open to traffic per the Railroad's requirements (Section 4.4.4 BNSF/UPRR Grade Separation Guidelines)
Railroad requirements do not allow work within 50 feet of track centerline when a train passes the work site and all personnel must clear the area within 35 feet of the track centerline and secure all equipment
False-work clearances shall comply with minimum construction clearances (Section 4.4.1; 4.4.5; 5.5 BNSF/UPRR Grade Separation Guidelines)
All permanent clearances shall be verified before project closing (Plan No. 71100 Sheet 3 BNSF/UPRR Grade Separation Guidelines)
For Railroad coordination please refer to the Railroad Minimum Requirements in the Special Provisions
No construction activities or other obstructions shall be placed within these limits
Minimum Clearance Above Top of Rail
Minimum Construction Clearance
Top of Rail
TYPICAL FENCE ON CONCRETE RAIL
Not to Scale
Chain Link Fence
Closed Concrete Rail with No Deck Drains over UPRR Right-of-Way
Bridge Deck
TOP OF RAIL ELEVATIONS
(Stations Increase with Milepost Increase)
MAIN LINE
Alignment
Left Rail
Alignment
Right Rail
Station
Elevation
TRACK PROTECTION SHORING REQUIREMENTS
Not to Scale
Handrail
Handrail Posts
Walk
Sprdrs
Track Shoring
Ground Profile
Shoring plans must be submitted for railroad approval prior to construction. A top of rail monitoring plan must be included with the shoring design submittal. A 1/4" maximum deflection is acceptable in both the horizontal direction and/or vertical direction
Excavation Permitted beyond 12'-0" from ℄ Track
No Excavation within 12'-0" of ℄ Track
Base of Rail
Grade Profile
Zone A
Zone B
Zone C
Zone A Shoring
Shoring shall be per OSHA Standards for excavation in Zone C. Sloping cuts will be permitted
Only vertical shoring will be permitted for excavation in this zone (no sloping cuts)
APPLICABLE RAILROAD LIVE LOAD:
Cooper E80
TRACK PROTECTION SHORING
All dimensions are measured perpendicular to ℄ Track
The contractor shall provide and install track protection shoring before commencing excavation
Prior to commencing any work, the contractor shall submit for approval by the railroad detailed plans indicating the nature and extent of the track protection shoring proposed
Shoring shall be designed for Cooper E80 live load surcharge and the Railroad may impose more stringent requirements as conditions warrant
For excavations which encroach into railroad live load surcharge zone, shoring plans must be accompanied by a copy of the design calculations and both must be stamped by a Professional Engineer registered in the state of Nebraska
Design of shoring shall comply with the railroad's guidelines and AREMA Specifications for design and construction of shoring adjacent to active railroad tracks
Direct payment will not be made for this work, but shall be considered subsidiary to the Pier Excavation

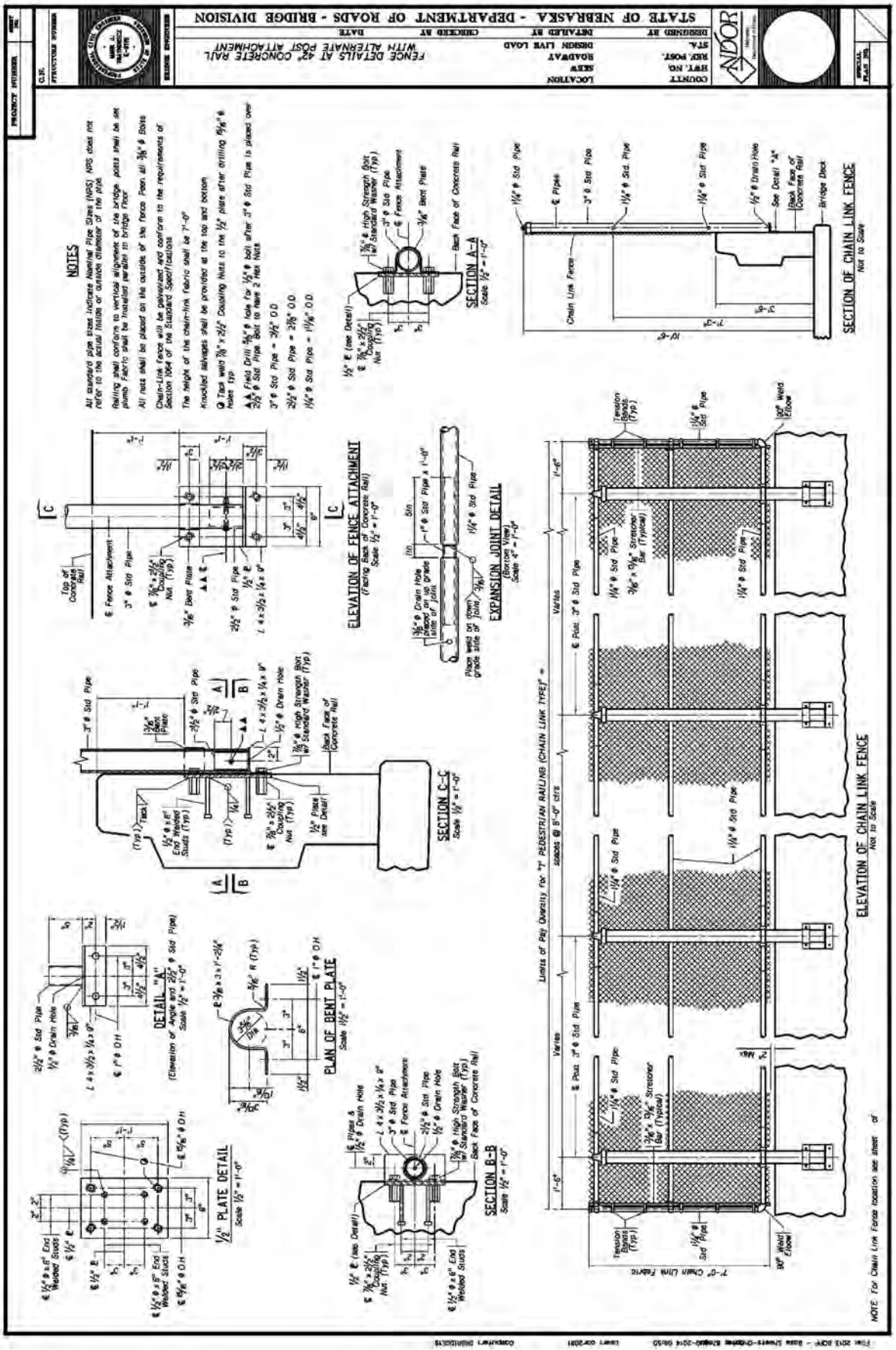
STATE OF NEBRASKA - DEPARTMENT OF ROADS - BRIDGE DIVISION
FENCE DETAILS AT 42" CONCRETE RAIL WITH ALTERNATE POST ATTACHMENT
NOTES
SECTION A-A
SECTION OF CHAIN LINK FENCE
ELEVATION OF FENCE ATTACHMENT
EXPANSION JOINT DETAIL
SECTION C-C
DETAIL "A"
PLAN OF BENT PLATE
1/2" PLATE DETAIL
SECTION B-B
ELEVATION OF CHAIN LINK FENCE
NOTE: For Chain Link Fence location see sheet of

Proposed Revision/Addition to the BOPP Manual

☐ Revised Document ....
Title *Page*

☐ New Document

Proposed by: .....

Date: .....

Proposed Revision/Addition: *(Use space provided or attach proposed Revision/Addition to this form.)*

.....

.....

.....

.....

.....

.....

.....

.....

.....

.....

.....

Reason for Revision/Addition: .....

.....

.....

.....

Benefit of Revision/Addition: .....

.....

.....

.....

How will this proposed Revision/Addition affect the overall cost of the bridge?

☐ Increase $ .....

☐ Decrease

☐ No change

☐ Unknown at this time

Will this proposed Revision/Addition deviate from current AASHTO policy?

☐ Yes .....
Article

☐ No.

Section 7

Revisions

1. March 2014 ..... 7.02
2. April 2014 ..... 7.03
3. May 2014 ..... 7.04
4. July 2014 ..... 7.05
5. July & August 2014 ..... 7.06
6. September 2014 ..... 7.08
7. October 2014 ..... 7.09

March 2014

Pages: 2.15, 2.70, 2.78, 3.16, 3.32, and 5.23

Corrected wording.

Page: 2.16

Added Electronic Shop Plan Review.

Pages: 2.47, 2.48, 2.63, and 2.64

Updated notes and added Pay Items.

Pages: 2.58 and 3.65

Updated elastomeric bearings criteria.

Page: 3.03

Updated cantilever design criteria.

Page: 3.05

Updated girder design policy.

Page: 3.47

Clarified field splice surface conditions.

Pages: 5.14 through 5.17

Revised Concrete Construction.

April 2014

Pages: 3.65 through 3.68

Update Elastomeric Bearing Design.

Page: 4.06

Update Test Pile Data Table.

May 2014

Pages 2.27 and 2.53

Edit wording.

Page 3.75

Update Bearing Pads.

July 2014

Pages 2.77 and 6.15

Remove 2% crossslope in trough.

Page 3.33

Remove concrete diapragm payment for ITs.

Page 3.65

Define thermal source.

Page 3.96

Add Pay Item number.

Page 6.12

Add note requiring galvanization of strip seals.

Page 6.23

Extend tubing to 4” minimum below bottom flange.

July & August 2014

Page 2.07

Update descriptions of work.

Page 2.24 and 2.25

Update Live Load policy.

Page 2.28

Define maximum and minimum shoulder distances.

Page 2.48

Update shop plan for review note.

Page 3.10

Extend floor drian 4” below bottom flange. Remove painting of floor drains for steel girder bridges.

Page 3.17

Update overlay policies.

Page 3.23

Camber shall not be included in vertical clearance calculations.

Page 3.41

Update steel girder design policy.

Page 3.50

Define bearing area for calculations.

Page 5.07 and 5.08

Update Contractor’s Access Bridge and Crossing Special Provisions.

Page 5.15 through 5.19

Update Concrete Bridge Floor Special Provision.

Page 5.20 (5.18 previous page #)

Corrected energy E formula.

Pages 6.57 through 6.65

Close gap at end of floor on open rail on approach base sheet and update details.

Page 6.75

Update details.

September 2014

Page 2.12

Add quantity tolerances.

Page(s) 2.49, 2.51, 3.42, and 3.57

Consistantly refer to shear connectors.

Page 2.54

Add turnbuckles and other hardware to Note # 414.

Page(s) 2.64 and 2.65

Add Pay Item #s for Access Bridge / Crossing and remove Pay Item # for (general) Steel Supersturcture at Station_____.

Page(s) 2.76 and 6.15.

Add concrete slope protection details.

Page 4.14

Correct spelling.

Page 5.22

Update special provision.

October 2014

Page 1.11

Update future freight tracks to be spaced at 20’ and future cummuter tracks at 25’.

Page 1.13

Remove the statement about piers being checked for collision force as the LRFD code has removed the vehicular collision force (CT) for railroads. Current agreements with the railroads require “heavy construction”.

Page 2.47

Update Note 001 to ‘Seventh’ edition of the AASHTO LRFD Bridge design Specifications.

Page 3.11

Require strip seals or modular joints for all expansion joints on bridge decks.

Pages 6.2 through 6.7

Update example title sheets.

2.1.8 - Shop Plans Review Policy

Definitions:

"Shop Plans"

Shop Plans are produced by the Fabricators and define how material is to be prepared, assembled, finished, and/or erected.

"Fabricator"

Fabricator refers to the facility(ies) performing shop activities such as cutting, welding, punching, drilling, cleaning, and painting of structural components.

"Shop Plan Review"

Review of the Fabricator's shop plans is to verify that the plans are consistent with contract documents.

Responsibilities:

"Fabricator"

The Fabricator is responsible for providing shop plans that accurately show the appropriate details, dimensions, materials, and all necessary requirements to fabricate and erect components of the structure in conformance to the contract documents.

"NDOR and Contractor"

NDOR and the Contractor are responsible for reviewing the shop plans to ensure that the Fabricator has correctly interpreted the intent of the contract documents.

In-House Shop Plans Review Procedure

Contractor approves and sends the plans to Construction Division with a stamp or authorization letter.

Construction Division sends the plans to the Bridge Division.

1. The Office Manager records receiving the shop plans.
2. Assistant Bridge Engineer distributes the shop plans.
3. If the Contractor's stamp or authorization letter is missing, the plans shall be returned to Construction for resubmittal.
4. If any shop drawing has welding details, one set will be sent to the Steel Fabrication Inspection Unit for review.
5. Plans are reviewed. (See Shop Plans Review Items) Incorporate any Inspectors' remarks or corrections.
6. Stamp each sheet (preferably in the lower right-hand of each sheet) indicating the level of acceptance. The three options within the stamp are as follows:
   a. No exceptions taken
   b. Make corrections noted
   c. Amend and resubmit
7. Write a letter describing the conditions of acceptance.
   a. There are three form letters available, one for acceptance, one for acceptance if minor corrections are made, and one for rejection.

8. If plans are to be amended and resubmitted, keep one red marked copy and send two red marked copies along with a form letter to Construction. These shop drawings must be resubmitted and be treated as new shop plans.
9. Red mark each set of shop plans if minor corrections are to be made.
10. Distribute accepted shop plans as follows:
    a. File one reviewed copy of shop plans in the project file in the vault.
    b. For all shop plans pertaining to steel fabrication, one copy must be given to the Fabrication Inspection Unit.
    c. Forward all remaining copies along with an attached letter describing the conditions of acceptance to the Construction Division for distribution.
    d. The Construction Division will distribute these copies to Materials and Research, Project Manager, Contractor, and Fabricator.
11. Record the departure on Office Manager's shop plan list.

    Note: The original of every transmittal letter should be placed in the correspondence file.

    Shop Plans are microfilmed after the project is completed in the field.

Electronic Shop Drawing Review

Formatted: Font color: Red

1. Construction Division will notify, by email, Bridge Division's Highway Bridge Data Technician that a shop drawing is in Falcon and ready to be reviewed.
2. The email will contain the Control Number for the project.
3. The Bridge Division reviewer will check out the shop drawing from Falcon at the location Environment / District # / Control Number / Contract Admin / Shop Drawings / Preliminary / Bridge.
4. The reviewer (and Steel Fabrication Inspection Unit if required) will review the drawing and make all necessary markings and stamping in Acrobat.
5. The reviewer will check the file back into Falcon and email the Bridge Division's Highway Bridge Data Technician that the shop plans have been reviewed.
6. The Bridge Division's Highway Bridge Data Technician will send an email to the Construction Division (dor.ShopDrawings@nebraska.gov) stating that the drawing has been reviewed and is ready for distribution.

Formatted: Font color: Red

Formatted: Font color: Red

7. If the reviewer is a Consultant the drawing will be sent to and received back from the Consultant through the NDOR FTP site.

Consultant Shop Plans Review Procedure (If Consultant is under contract for the reviewing)

Contractor approves and sends the plans to Construction Division with a stamp or authorization letter.

Construction Division sends the plans to the Bridge Division.

1. The Office Manager records receiving the shop plans.
2. Section Head distributes the shop plans.
3. If the Contractor's stamp or authorization letter is missing, the plans shall be returned to Construction for resubmittal.
4. If any shop drawing has welding details, one set needs to be sent to the Steel Fabrication Inspection Unit for review.

SECTION 2.3: STANDARD NOTES

2.3.1 - General Notes

001 This structure is designed in accordance with the AASHTO LRFD Bridge Design Specifications, Sixth Edition, including subsequent interim revisions.

002 The concrete bridge deck is designed by the empirical design method.

003 The superstructure is designed for the allowance of stay-in-place forms (5 lb./ft^2) between girders.

004 The girders and substructure are designed for a future wearing surface of 20 psf.

005 The Contractor may substitute any one of the alternate designs shown on the plans for the original design. All quantities are based on the original design and no additions or deductions will be allowed for the use of an alternate design.

006 All dimensions shown are in horizontal plane only. No allowances have been made for vertical curve or roadway cross slope.

007 The existing structure was built under project _____, dated __/__/__. Plans are available from the Bridge Division upon request.

008 The **(Utility Company)** shall furnish all PVC sleeves, conduit, inserts, and hardware required for the utility attachment to the bridge. All material to be installed by the Bridge Contractor shall be delivered to the bridge site by the utility company within 72 hours after notification from the Bridge Contractor. The contact person for the **(Utility Company)** Is Mr. XXXXX and can be reached at (XXX) XXX-XXXX.

009 The Contractor shall install the sleeves and inserts as shown on the plans. The Contractor shall install the conduit from the face of the abutment to the toe of the slopes under the approach slabs but will not be required to install the hangers and conduit between abutments. The installation by the Bridge Contractor will not be paid for directly but shall be subsidiary to the Pay Item, "Class 47BD-4000 Concrete for Bridge".

010 Girder shims that will be provided to the Contractor account for the dead load deflection due to weight of the slab, rail or barrier, and median (if present) only. The Contractor is responsible for making the necessary adjustments for the particular forming system used to achieve the slab grades and elevations shown on the plans.

011 The Pay Item, "Excavation (Established Quantity)" shall include the channel excavation/fill through the bridge as shown on the plans.

012 The Pay Item, "Earthwork Measured in Embankment" shall include the channel excavation/fill through the bridge as shown on the plans.

013 Top soil shall be placed on riprap as shown in the riprap details.

014 The finishing machine shall be supported by the girders of the phase that is being poured. When closure pours are required, the bridge finishing machine shall be supported on the completed Phase I and Phase II slabs, straddling the closure pour opening to pour the Phase III concrete. ~~When closure pours are required, the bridge finishing machine shall be entirely supported by the Phase II girders for the Phase II slab placement.~~

015 Shop plans required for review (Designers shall only list those that apply).

Steel Superstructure

Prestressed Concrete Superstructure

Superstructure Steel (Diaphragms / Separators / Etc.)

Bearing Devices

Roadway Joints

Floor Drains

Pedestrian Barrier Rail

Pedestrian Railing (Chain Link Type)

Chain Link Fence

016 Shop plans required for record (Designers shall only list those that apply)

Stay-In-Place forms

Bridge Shoring

Temporary Bridge Shoring

Temporary Supports

017 Unless noted as "Optional" all construction joints shown are mandatory.

018 Any excavation required for Rock Riprap, Type "X" below the new channel cross section shall be subsidiary to the Pay Item "Rock Riprap, Type "X"".

2.3.7 – Miscellaneous Notes

Abutment Drainage

601 All plastic pipe, galvanized wire screen, and miscellaneous drainage items at the abutments shall be considered subsidiary to the Pay Item, "Subsurface Drainage Matting".

602 Drainage matting shall wrap around the sloping drain pipe and extend 3 ft. along the wings.

Bridge Widening

621 All existing concrete coming in contact with the new work shall be thoroughly cleaned and roughened before placing new concrete.

622 All reinforcing steel encountered in breaking back existing concrete shall be thoroughly cleaned, straightened and extended into the new work a minimum of 2'.

Elastomeric Bearings

631 Elastomeric bearing pads shall be AASHTO LRFD Bridge Construction Specifications Grade 3 or higher and have a hardness (Shore A durometer) of 60±5.

632 Elastomeric bearing pads, furnished and installed, shall be measured for payment by the each. Payment shall be for the Pay Item, "Elastomeric Bearing".

Mechanically Stabilized Earth (MSE) Walls

640 **MSE Wall Piling Notes:**

Abutment and grade beam piling may be driven before or after the construction of the MSE walls. If the piling are to be driven before the construction of the MSE wall, the Contractor shall place Corrugated Metal Pipe (CMP) sleeves around each pile prior to constructing the wall. If the piles are to be driven after the construction of the MSE wall, the Contractor shall place CMP sleeves at the exact location of each pile so that after the completion of the MSE wall the Contractor can drive the piles through the sleeves. The CMP sleeves shall be maintained in a plumb position during construction of the MSE wall. Furnishing and placing of the CMP sleeves shall be included as part of the work for the MSE wall.

After all piling for the abutment and grade beam are driven and the MSE wall is complete, the Contractor shall fill the space between the piling and the CMP sleeves with dry, clean sand. Backfilling with sand shall be considered subsidiary to Pay Item "HP ___ INCH x ___ LB Steel Piling.

Railroad

660 The top of rail elevations shall be verified in the field before beginning construction of the bridge. If the rail elevations are not as shown on the plans, the Project Manager shall contact the Bridge Division.

SBS Modified Base Sheet

670 SBS Modified Asphalt Base Sheet shall be modified bitumen roofing material, with a minimum thickness of 0.090 inches and a minimum weight of 60 lb. per 100 square feet.

Bridge Rehabilitation and Repair

700 The Pay Item "... ", has been given a quantity of 1. XX to establish a set price per XX. This shall be paid for by the contract unit price per XX (XX). Such payment is full compensation for all materials, equipment, tools, labor, and incidentals necessary to complete the work.

STANDARD PAY ITEMS

NOTE	CATEGORY	UNIT OF MEASURE	ITEM NUMBER
	EXPANSION JOINTS		
029	BRIDGE JOINT NOSING	CF	6004.48
030	EXPANSION JOINT	LF	6004.50
031	EXPANSION JOINT REPAIR	LF	6004.60
032	DECK JOINT SEAL, TYPE IV	LF	6005.13
033	PREFORMED SILICONE JOINT, TYPE B	LF	6005.28
034	PREFORMED SILICONE JOINT, TYPE A	LF	6005.31
035	PREFORMED EXPANSION JOINT, TYPE A	LF	6005.32
036	PREFORMED EXPANSION JOINT, TYPE B	LF	6005.33
037	SILICONE JOINT SEALER	LF	6005.34
038	PRECOMPRESSED POLYURETHANE FOAM JOINT, TYPE A	LF	6005.36
039	PRECOMPRESSED POLYURETHANE FOAM JOINT, TYPE B	LF	6005.37
	BEARINGS		
040	ELASTOMERIC BEARING	EA	6005.60
041	EXPANSION BEARING, PTFE TYPE	EA	6005.65
		~~EA~~	~~6005.78~~
042	FIXED BEARING DEVICE, TYPE I	EA	6005.80
043	FIXED BEARING	EA	6005.83
044	GUIDED BEARING DEVICE, TYPE II	EA	6005.85
045	NON-GUIDED BEARING DEVICE, TYPE III	EA	6005.90
	~~DECK FINISHING~~		
~~048~~	~~BRIDGE DECK GROOVING~~	~~SY~~	~~6006.56~~
	SILICA FUME OVERLAY		
050	CLASS I REPAIR	SY	6007.01
051	CLASS II REPAIR	SY	6007.02
052	CLASS III REPAIR	SY	6007.03
053	BRIDGE DECK REPAIR, PARTIAL DEPTH	SY	6007.22
054	BRIDGE DECK REPAIR, FULL DEPTH	SY	6007.23
055	PLACING, FINISHING, AND CURING CONCRETE OVERLAY – SF	SY	6008.40

STANDARD PAY ITEMS

NOTE	CATEGORY	UNIT OF MEASURE	ITEM NUMBER
CONCRETE			
060	FLOWABLE FILL CONCRETE	CY	3089.80
061	CLASS 47B-HE-4000 CONCRETE FOR BRIDGE	CY	6009.94
062	CLASS 47B-3000 CONCRETE FOR BRIDGE	CY	6010.22
	ABUTMENTS	CY	
	PIERS	CY	
062B	CLASS 47B-3000 CONCRETE FOR BRIDGE	CY	6010.22
	ABUTMENTS CY		
	BENTS CY		
063	CLASS 47BD-4000 CONCRETE FOR BRIDGE	CY	6010.26
	SLAB CY		
	HAUNCHES CY		
	CONCRETE RAILS CY		
063B	CLASS 47BD-4000 CONCRETE FOR BRIDGE	CY	6010.26
	SLAB CY		
	HAUNCHES CY		
	CONCRETE BARRIERS CY		
064	CLASS 47BD-5000 CONCRETE FOR BRIDGE	CY	6010.28
065	PRECAST/PRESTRESSED CONCRETE SUPERSTRUCTURE AT STATION _____	LS	6011.11
	GIRDERS	CY	
066	PRECAST-PRESTRESSED/POST-TENSIONED CONCRETE SUPERSTRUCTURE AT STATION _____	LS	6011.12
	GIRDERS	CY	
068	CONCRETE FOR OVERLAYS – SF	CY	6016.02
069	MULTI-LAYER EPOXY POLYMER OVERLAY	SY	6016.20
	REINFORCING		
070	REINFORCING STEEL FOR BRIDGE	LB	6020.00
	PREPARATION		
080	PREPARATION OF BRIDGE AT STATION _____	EA	6030.00
	REMOVE STRUCTURE AT STATION	EA	6040.00
	CONTRACTOR'S CONSTRUCTION ACCESS		
085	ACCESS BRIDGE	LS	6052.52
086	ACCESS CROSSING	LS	6052.55
	PEDESTRIAN BRIDGE		
088	PEDESTRIAN BRIDGE	LS	6070.50

Bill of Bars

There are a Bill of Bars Base Sheets (see Section 6) that will show the bending diagrams for the entire Bill of Bars shown in the Plans. This sheet will also contain the Bill of Bars for the approach slabs. Phased projects will indicate the number of bars in each phase in the Bill of Bars.

- The Bill of Bars for the bridge elements will be shown next to the detailed drawings. A separate Bill of Bars for each bridge element, such as: the abutment, pier (bent), bridge deck and the slab for a slab bridge; will be shown on the respective Plan Sheet where they are detailed. For example, if one detail is used for both abutments in the Plans, two Bill of Bars will be required. The following cells are available in the General Bridge cell library for detailing on the Plan Sheets.

BILL OF BARS													WEIGHT
MARK	NO.	LENGTH	TYPE	"A"	"B"	"C"	"D"	"E"	"F"		PIN	HOOK	Lbs.
												SUBTOTAL =	LBS
NOTE: FOR PIN DIAMETERS, HOOK LENGTHS & BENDING DIAGRAMS SEE SHEET OF .												TOTAL =	LBS

AC=BOB

Bill of Bars														Weight Lbs.	
Mark	Number of Bars		Length	Type	"A"	"B"	"C"	"D"	"E"	"F"		Pin	Hook	Phase 1	Phase 2
	Phase 1	Phase 2													
													Subtotal =	Lbs.	Lbs.
NOTE: For pin diameters, hook lengths & bending diagrams, see Sheet of													TOTAL =		Lbs.

AC=PBOB

- **Bar Lengths**
  The Bridge Division's general policy for calculating bar lengths will be based on 60 ft., with a lap splice provided for bars exceeding that length. 40 ft. barlap lengths shall be used for # 3 bars. Bar lengths should be rounded to the nearest inch.

- **Bar Lengths**
  When bar sets are needed, a single bar number shall be used for the entire set. A minimum, maximum and an average bar length will be shown for each set. Average length for bar sets should be rounded to half-inch increments. The cell BOBST is available in the General Bridge cell library.

BAR SETS				
MARK	MAX. LENGTH	MIN. LENGTH	NO. OF SETS	BARS PER SET

AC=BOBST

- **Bar Lengths**
  All bending diagram dimensions will be given as out-to-out based on the pin diameters for Grade 60 bars. Bill of Bars will show the required pin diameter and hook length according to primary stress or stirrup requirements.

2.5.2 – Riprap Policy

General Criteria

Riprap will be specified on the Plans as indicated on the Data Sheet. Riprap must be placed along the abutment wings, as stated in the Wing Policy, and must be added if it is not specified in the Data Sheet riprap layout.

Broken Concrete

Designers must verify the volume of broken concrete riprap available on the project. Sources may include the existing structure, other locations on the project, or other locations specified by the District. The Plans or Special Provisions must specify the designated areas where the broken concrete riprap may be obtained by the Contractor. If there is not enough existing concrete to provide the required riprap specified on the Data Sheet, the Designer should request the Hydrology Section to modify their riprap layout or specify additional rock riprap (Type A, B, or C).

Broken Concrete Volume

The volume of broken concrete available to be used as riprap will be the actual unbroken (existing) concrete volume. This will allow for approximately 30% losses when the concrete is placed as broken concrete riprap. The in-place density of broken concrete riprap will be 1.35 Ton/CY. See Rock Riprap for calculation of quantities.

Bituminous Overlays

The following paragraph must be included in the Special Provisions; normally in "Preparation of Bridge at Station _____".

> Bituminous material may not be used as broken concrete riprap. Concrete structures that have a bituminous overlay must have the overlay removed prior to removal of the structure if the concrete is to be used as riprap.

Rock Riprap

The in-place density of rock riprap (Type A, B, or C) will be 1.35 Ton/CY. Therefore, the quantity of riprap should be based on the following equation:

(Riprap Volume) CY x 1.35 Ton/CY = Riprap Quantity (Ton)

Salvaging and Placing Topsoil on Riprap

6 inch compacted topsoil shall be shown on the plans at the following locations. Topsoil for environmental requirements shall extend from the higher of the Ordinary High Water elevation or 3 feet above flowline elevation to the top of the natural high bank. This topsoil shall extend out from the drip line protection to the limits of riprap. Riprap for drip line protection is always placed on the natural high bank area and does not normally require topsoil. Topsoil for animal transport shall not be placed on slopes and will go from one limit of riprap to the other including under the structure. 6 foot of clearance is required for topsoil for animal transport. The Designer should contact Roadway Design and Hydraulics about the topsoil requirements.

Payment

NDOR Standard Specifications, Section 905 states that rock riprap will be paid for as **"Rock Riprap, Type A, B, or C"** (Ton). Section 906 states that broken concrete riprap will be paid for as **"Broken Concrete Riprap"** (Ton).

Phased Decks

Bridge decks to be built under phasing shall meet the empirical deck cantilever requirements for the overhang provided in the first phase of construction. Closure pours will be required whenever the dead load deflection exceeds 2 in. When closure pours are required, standard note # 014 should be shown and the intermediate diaphragms left out or bolts left loose until after the Phase II pour. Details are to be shown on the typical cross-section.

Cantilever Design Criteria

Future surfacing shall not be included in cantilever dead load. The effective depth shall not be reduced for a wearing surface.

For slab overhang up to 4 ft.-6 in. on NU and steel girder bridges with empirical decks and inverted tee girder bridges with 8 inch decks..

- Minimum slab thickness shall be 8 in.
- Reinforcement for slab overhang shall be 2 - # 6 bars at 4 in. centers placed between top slab reinforcement (match equivalent area of steel for non empirical decks). The # 6 bars shall be fully developed but shall not be terminated in the same section. (See details below.)

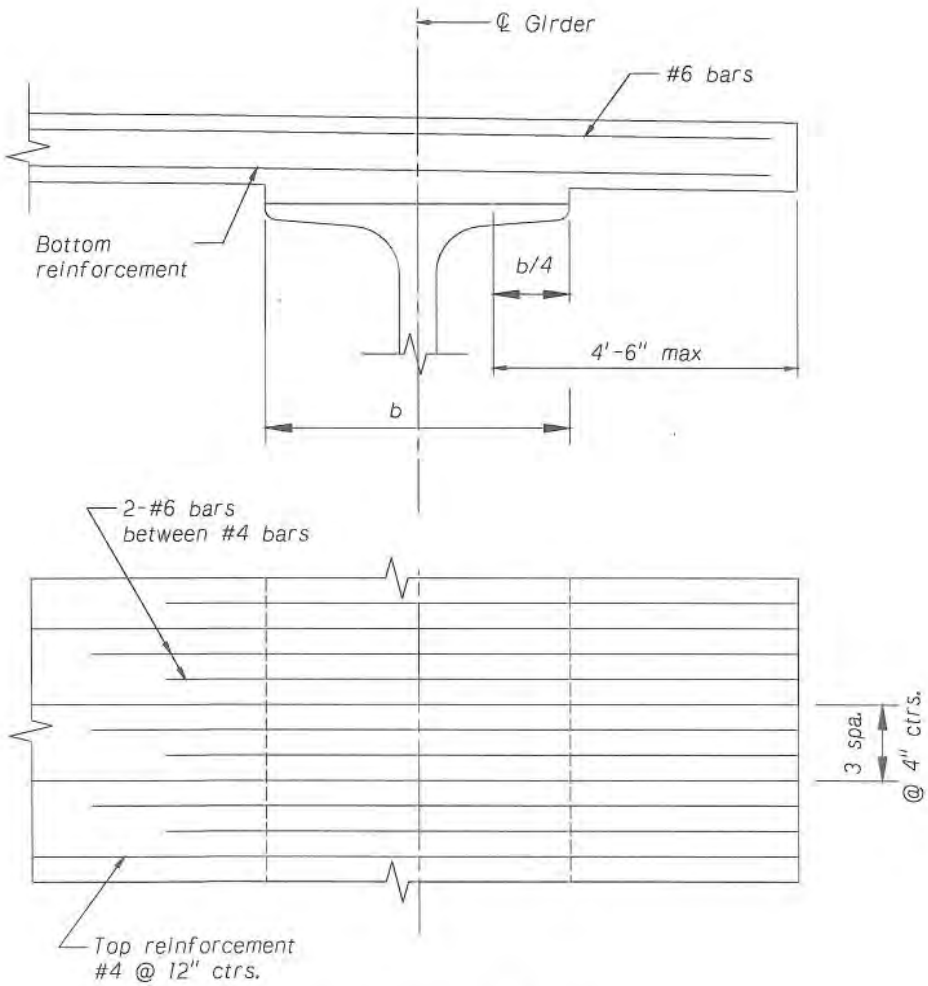

OVERHANG DETAILS
(Showing transverse reinforcement only)
Not to Scale

3.1.2 – Girder Design Policy

The following deflection limits shall be used to control deflection:

- Vehicular load, general span/800
- Vehicular and/or pedestrian loads span/1000
- Vehicular load on cantilever arms span/300
- Vehicular load and/or pedestrian loads on cantilever arms span/375

For up to 5 - girder bridges, minimize overhang and if the exterior girder controls, use exterior girder design for all girders. For more than 5 - girder bridges, minimize the overhang and use the interior girder design for the entire bridge.

For all bridges on the State highway system, the load factor for vehicular live load (LL) and vehicular dynamic load allowance (IM) for Strength I in Table 3.4.1-1, Load Combinations and Load Factors, of the AASHTO LRFD Bridge Design Specifications shall be increased from 1.75 to 2.0.

Design Tandems as per the commentary of Article 3.6.1.3.1 shall be applied on all bridges that carry Interstate and Expressway traffic.

Submerging girders shall be avoided and only permitted when justified hydraulically, with structural analysis on girders, connections and piling, and with the approval of the Bridge Engineer. Vent holes will be required.

Structural concrete overlays, up to the original deck thickness, may be considered part of the deck during analysis.

LFD Review

When reviewing existing girders designed by previous AASHTO Standard Specifications odes, the bonded length of prestressing strands (Section 9.28 in the 17th Edition) shall be based upon a 1.0 factor for girders <= 24 inches in height.

Joint openings shall be designed in increments of 1/4".
Minimum Joint opening @ 50° for TM > 1/2" will be 2".
50° Joint opening size will be rounded up to the nearest 1/4" for TM > 2.0"
PPF joint material shall be ordered for the 50° joint opening size + 0.25"
Formed joint opening size will be the 50° opening size adjusted to the nearest 1/4" of TM for expected casting temperatures above or below 50°. Opening is for PPF, add ¾" for Silicoflex and ½" for Wabo SPS to the nominal joint opening (A).

90' between fixed point and expansion joint
BOPP 2.2.6 TM = $\Delta T \times \alpha \times L$, ~~steel~~concrete superstructure ΔT =130°F, $\alpha = 6.5 \times 10^{-6}$/°F, L = 90'
TM = 0.076' = 0.9126"
Type B ≤ 1", 1" < Type A ≤ 2.5, 0.9126" < 1", therefore Type B joint (range = order size ± 25%)
0.9126" < 2", therefore use 2" design joint opening @ 50°
± 5°F, TM = ± (5) x (0.0000065) x (90) x (12) = 0.0351" <1/8", therefore 2" @ 50° ± 5°
± 10°F, TM = ± 0.0702", 0.0702 < 0.125, therefore 2" @ 50° ± 10°
± 15°F, TM = ± 0.1053", 0.1053" < 0.125", therefore 2" @ 50° ± 15°
+ 20°F, TM = 0.1404", 0.125" < 0.1404" <0.25", therefore 2" - 0.25" @ 70°
+ 25°F, TM = 0.1755", 0.125" < 0.1755" <0.25", therefore 2" - 0.25" @ 75°
+ 30°F, TM = 0.2106", 0.125" < 0.2106" <0.25", therefore 2" - 0.25" @ 80°
+ 35°F, TM = 0.2457", 0.125" < 0.2457" <0.25", therefore 2" - 0.25" @ 85°

Ambient Temperature Range During Pour	Opening
35° - 65°	2.00"
65° - 85°	1.75"

PPF order size 2.25"

3.3.3 – Prestressed Inverted Tee Girder

General Design

The Nebraska University Inverted Tee (IT) prestressed girder sections can be used for short to medium span bridges with depth limitations and to replace deficient concrete slab bridges.

IT Sections

The most commonly used IT prestressed girder sections and properties are listed below.

- Depth is based on the actual geometry and includes a 1 ½ in. notch:

Girder	Height (in)	Web Width (in)	Flange Thickness (in)	Flange Width (in)	Area (in^2)	Centroid * (in)	Inertia (In^4)	Weight (Lb/ft)
IT 300	13.31	6.38	5.50	23.63	178.9	4.50	2,034	186.4
IT 400	17.25	6.38	5.50	23.63	204.0	5.81	4,468	212.5
IT 500	21.19	6.38	5.50	23.63	229.1	7.25	8,331	238.6
IT 600	25.13	6.38	5.50	23.63	254.2	8.75	13,866	264.8
IT 700	29.06	6.38	5.50	23.63	279.3	10.38	21,293	290.9
IT 800	33.00	6.38	5.50	23.63	304.4	12.06	30,827	317.1
IT 900	36.94	6.38	5.50	23.63	329.5	13.75	42,674	343.2

* Measured from the bottom of the girder

Composite Design

To allow for the loss of the wearing surface, the design slab thickness shall be 0.5 in. less than the actual bridge slab thickness when calculating the composite section in the positive moment regions. Composite properties and superimposed dead loads without any future wearing surface load, as shown on the Prestressed Girder Base Sheet must be included in all Plans. The midspan composite section properties refer to the gross concrete area including the effective transformed concrete area of the slab, but do not include the prestressing strands or the slab reinforcement.

Girder Spacing

The maximum girder spacing for the Inverted Tee prestressed girders shall be 37 in.

Distribution of Loads

For prestressed Inverted Tee girders, the distribution factors of live load per lane shall be S/11 for moment and S/5.5 for shear, where S is the beam spacing in feet. These factors are based on research done by the University of Nebraska.

Bridge Deck

Cast-in-place slab thickness is 6 in. Slab reinforcement is a single layer of reinforcement at mid slab thickness. Use # 5 bars @ 6 in. centers for transverse reinforcement and # 5 bars @ 10 in. centers for longitudinal reinforcement. Additional reinforcement shall be provided in the slab on structures continuous over the piers. The maximum overhang length measured from the centerline of the exterior girder shall be 19 in. No additional reinforcing is required in the cantilever and the 6 in. slab thickness shall be maintained. Slab concrete compressive strength is 4000 psi. Up to the maximum girder spacing slab thickness shall be 8 in. on the Interstate (or with 42" NU rail) with # 5 bars transversely and # 4 bars longitudinally spaced at 12" centers in the bottom mat and # 5 bars transversely and # 4 bars longitudinally spaced at 9" centers in the top mat. Cantilever reinforcing per Section 3.1.1.

3.4.2 – Field Splice Policy

General Design Criteria

- Designers should minimize the number of different splice plate thicknesses specified for a bridge.
- Field splice shall be located in a constant web depth area.
- Girder clear gap shall not exceed 0.375 in. and web center shall be used for alignment details (not shown in the plans).
- Connection bolts shall be 7/8 in. ASTM A325 (AASHTO M164).
- Class B surface condition (weathering steel girders blast cleaned) should~~all~~ be used for splice design. Class A condition shall be used for other surfaces (painted).
- Web and flange bolt threads shall be excluded from the shear plane.
- For composite design, only slab reinforcement developed beyond the splice shall be used and slab thickness shall be reduced 1/2 in. for the wearing surface.
- For LFD design, Designers shall use HS20 loading for live load fatigue.
- A minimum of eight bolts must be used for each half of a flange splice on all girders.
- ~~Design slip resistance for slip-critical connections shall be 21 ksi for load factor design.~~

Elimination of Field Splices

Based on construction criteria and the approval of the Engineer, Contractors may eliminate any field splice by extending the heavier section without any change in contract price or quantities. Designers shall include Standard Note # 137 on the Front Sheet of the Bridge Plans. Changes in the plans will be shown in the Shop Plans.

Detailing

The following data tables and detail are available as CAD cells.

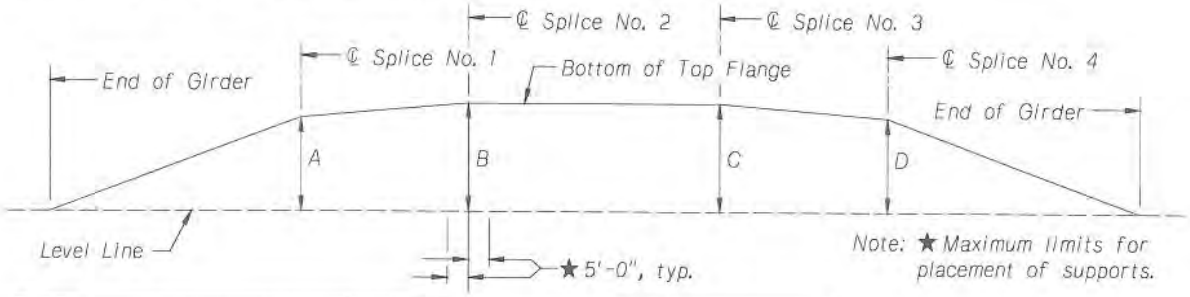

SUPPORT HEIGHT FROM LEVEL LINE				
LOCATION	A	B	C	D
HEIGHT				

Note:
To be used when the contractor elects to connect two or more sections on the ground.

SUPPORT DIAGRAM FOR FIELD ASSEMBLY OF STEEL GIRDERS

Not to Scale

3.5.4 – Elastomeric Bearing

General

- Elastomeric bearings rely on the pad elastic properties in shear to allow translational and rotational movement of the bridge.
- Bridge Office Policy specifies the use of AASHTO LRFD Bridge Design Specifications elastomeric bearing design Method "A" because it has been concluded that Method "B" will rarely, if ever, be cost effective. The testing proceedure for Method "B" must be approved by the Assistant Bridge Engineer.
- The material testing required for bearings designed using Method B could result in higher allowable design stresses, that could produce smaller (less expensive) bearings, but savings in the cost of the bearing are generally more than offset by the cost of the material tests.
- NDOR Designers may use the Elastomeric bearing design spreadsheet in the bearing design spreadsheet Bearings (\\drapps\Bridge\Spreadsheets\Bearing Pad Design).

Design Criteria

- Bearings are designed using service loads (unfactored), without impact.
- For plain and reinforced elastomeric bearings, Designers shall specify~~may use~~ 60 durometer elastomer on the plans and use a shear modulus of ~~(~~G = 130 psi for design~~)~~.
- ~~For plain elastomeric bearings, Designers may use 60±5 durometer elastomer (G = 200 psi).~~ Table 14.7.6.2-1 14-70
- Minimum elastomer thickness for plain pads and internal layers of reinforced pads is 3/8 in.
- All internal elastomeric layers of reinforced bearings will be equal thickness.
- Minimum elastomeric cover layer thickness is ¼ in.
- Minimum steel shim thickness is 11 gage, grade (33-36) Article 14.7.5.3.5 of the AASHTO LRFD Bridge Design Specifications provides minimum steel shim thickness equations for both the service limit state and the fatigue limit state and an ultimate minimum thickness of 0.0625 inch..
- A minimum of (2) steel shims are required for reinforced bearings.
- Maximum total bearing thickness is 5 in. without Section Leader approval.

Horizontal Movement

- Elastomeric bearing pads designed as expansion bearings shall be designed for the sum of horizontal movements Δ_s due to all applicable sources (i.e. thermal, creep, shrinkage, etc.).

Rotation

Plain and reinforced elastomeric bearings will be designed for a minimum rotation of 0.005 radians plus the dead load rotation when a beveled sole plate is not used. Bearings will be designed for a minimum rotation of 0.005 radians when a beveled sole plate is used. A beveled sole plate is required when the girder slope equals for exceeds 1.0% (0.010 Radians). The minimum rotation requirement accounts for construction tolerance and live load rotation.

Note:

See Elastomeric Bearing Design Example or General Bearing Policy for additional design information.

5.G5 – Concrete Construction

~~Section 704 in the Standard Specifications is amended to include the following:~~

~~All concrete rails on bridges and approach slabs shall be cast-in-place.~~

~~Paragraph 8. of Subsection 704.03 is amended to provide that forms for bridge rails over 34 inches in height shall be made of steel. Form material as prescribed in Paragraph 8. of Subsection 704.03 shall be used for bridge rails 34 inches or less in height.~~

~~The fourth subparagraph of Paragraph 8.j. of Subsection 704.03 is void and superseded by the following:~~

~~Steel stay-in-place form material shall conform to the requirements of ASTM A 653/A 653M Coating Designation G165/Z500.~~

CONCRETE CONSTRUCTION
(G-5-1111)

Section 704 in the Standard Specifications is amended to include the following:

All concrete rails on bridges and approach slabs shall be cast-in-place. Slip-forming will not be permitted for concrete rails on bridges and approach slabs.

Paragraph 8. of Subsection 704.03 is amended to provide that forms for 42 inch bridge rails shall be made of steel.

The fourth subparagraph of Paragraph 8.j. of Subsection 704.03 is void and superseded by the following:

Steel stay-in-place form material shall conform to the requirements of ASTM A 653/A 653M Coating Designation G165/Z500.

Paragraphs 8.a., b. and c. of Subsection 704.05 are void and superseded by the following:

8. Payment Deductions:

a. The 28-day compressive strength is determined by the average strength of all cylinders made on a specific day to determine the 28-day compressive strength of all of a group's class of concrete poured that day. Concrete with a 28-day compressive strength not meeting the design compressive strength is subject to removal.

b. If the 28-day compressive strength is less than the design compressive strength, cores may be taken within 45 days after the concrete was poured. The average of the cores will be used to determine the compressive strength. If the average of the cores is equal to or greater than 85% of the design compressive strength, the concrete is acceptable

for use and is not subject to removal or a pay reduction. Cores will be taken by the Department at no cost to the Contractor.

c. If either the 28-day compressive strength or the average core strength is less than the design strength and the Engineer determines that the concrete is acceptable for use, the concrete is subject to a payment deduction. The pay deduction is shown below:

$$\frac{2 \times (\text{Design Compressive Strength} - \text{28-day Compressive Strength})}{\text{Design Compressive Strength}} = \text{Percent Reduction}$$

Or

$$\frac{2 \times (\text{Design Compressive Strength} - \text{Average Core Compressive Strength})}{\text{Design Compressive Strength}} = \text{Percent Reduction}$$

CONCRETE BRIDGE FLOORS (10-DAY WET CURE) (G-5-0314)

The following special provision applies to concrete decks on girder bridges. Slab bridges shall be cured in accordance with Section 706 of the specifications.

Paragraph 8.i.(3) of Subsection 704.03 in the Standard Specifications is void and superseded by the following:

8.i.(3) Typical items which may be constructed in this manner include box culvert walls on floors and pier columns on footings.

Paragraph 5. of Subsection 706.03 in the Standard Specifications is void and superseded by the following:

5. No work shall be performed on the bridge deck, including forming and placing reinforcement for concrete curbs or railing until the concrete deck has cured for 10 days.

Paragraphs 8., 9. and 10. of Subsection 706.03 in the Standard Specifications are void and superseded by the following:

8. a. Finishing
   (1) Immediately following the finishing machine, the Contractor shall give the bridge floor surface a drag finish with wet burlap, carpet or a soft bristled broom. The drag finish shall create a uniform, fine-grained finish on the sealed concrete surface.

b. Grooving
   (1) Transverse grooving or tining in plastic concrete of bridge decks (and bridge approaches on new bridges and bridge deck replacements) will not be allowed unless otherwise stated in the contract documents.
   (2) The Contractor shall cut longitudinal grooves into hardened concrete surfaces using a mechanical cutting device. Perform longitudinal grooving after surface correction grinding.

(3) The longitudinal grooves shall be:
(i) 1/8 inch ± 1/64 inch wide,
(ii) 1/8 inch to 1/4 inch (3 mm to 6 mm) deep, and
(iii) Uniformly spaced at 3/4 inch intervals measured center to center of groove.

(4) Longitudinal grooving shall terminate approximately 6 inches (150 mm) from bridge joints.

(5) Longitudinal grooving on the bridge deck and bridge approach sections shall be discontinued 2 feet from the bridge curb or rail.

(6) For phased bridge and bridge approach construction:
(i) The Contractor may cut longitudinal grooves in the hardened concrete at the end of each phase of construction or wait until all phases have been completed. If the Contractor elects to delay cutting of the longitudinal grooves until completion of all phases, apply an interim broom finish on the concrete deck and bridge approach during placement for all phases opened to traffic.
(ii) The Contractor shall finish all longitudinal grooving for all phases within 30 calendar days following completion of the last phase of the bridge.
(iii) The interim broom finish will not be allowed as a surface texture when opened to traffic over a winter season. If the interim broom texture is present and the Contractor is not in a position to finish all phases of the bridge, the Contractor shall cut longitudinal grooving into the hardened concrete in order to establish an acceptable driving surface texture for the winter season.

9. Curing

a. For this Specification, the bridge deck is defined as the concrete deck and pavement cast between the bridge grade beams. Approaches outside the grade beams are excluded.

b. The Contractor shall cure the concrete deck with wet burlap for at least 240 hours.
(1) The Contractor shall place uniformly saturated wet burlap on the concrete no later than 20 minutes after the finishing machine passes.
(2) The burlap shall be thoroughly wetted prior to placing it on the concrete. The burlap shall be kept continuously wet by means of a sprinkling or wetting system for the 10 days.
(3) The wet burlap shall be secured or weighed down so that it remains in contact with the concrete surface.
(4) After 96 hours, the Contractor may place white opaque polyethylene film over the wet burlap to reduce the amount of water needed.

c. After the 10 day wet cure, the Contractor shall apply an approved white pigment curing compound within 45 minutes of removing the wet burlap.
(1) The total rate of combined applications shall be a minimum of 1 Gal/150 SF of surface area.

(2) The Contractor shall cure the deck with the white pigment curing membrane for an additional 7 days. The Contractor may work on the bridge concrete rail during the 7 days provided caution is used to limit damage to the membrane.

(3) Curing compound shall not be applied to construction joints or reinforcing steel.

d. The Contractor must provide a list of equipment, equipment certification, and the number of personnel that will be dedicated to the curing operation at least 24 hours before the actual casting date.

e. The Contractor shall be responsible for the repair of all visible cracks more than 3 inches (75 mm) in length that develop on the bridge deck up to the time the project is accepted at no additional cost to the Department.

f. Cracks shall be repaired with an approved bridge deck crack sealant (methacrylate). Crack sealants shall be installed in accordance with the manufacturer's recommendations.

g. Concrete Bridge curbs and rails shall be cured in accordance with Subsection 704.03.

10. Grinding

a. The grinding and grooving shall not be done until after the 17 days of curing is complete.

b. Bridge decks shall be ground for smoothness in accordance with Section 733.

(1) For bridge decks and approaches that are not covered by Section 733:

i. The Contractor shall test the cured concrete for surface irregularities with either a 10 foot straightedge placed or operated parallel to the centerline of the roadway or some other device for measuring deviations from a plane. Variations greater than 1/8th inch shall be plainly marked for removal, except that for decks which are to receive a subsequent concrete overlay course, where ¼ inch variations are allowed.

ii. The Contractor shall grind or cut irregularities that exceed the above limits. Bush hammering or other impact methods are not allowed.

Paragraph 15. of Subsection 706.03 in the Standard Specifications is void and superseded by the following:

15. Time for Opening Bridge Floor to Traffic

a. The Contractor shall not open the bridge floor to traffic until approval has been given by the Engineer. The Engineer may open the bridge when

the concrete has reached a minimum age of 17 days and has developed a compressive strength of 3500 psi.

b. Construction equipment meeting legal load limits will be allowed on the deck for bridge work after the 10 day wet curing period provided the deck has achieved 70% of the minimum compressive strength prescribed in the plans.

5.G14 – Precast or Precast/Prestressed Concrete Structural Units

PRECAST OR PRECAST/PRESTRESSED CONCRETE STRUCTURAL UNITS (G-14 - 0311)

Section 705 in the Standard Specifications is void and superseded by the following:

705.01 -- Description

1. This work consists of all labor, materials, and equipment required in the production of precast or precast/prestressed structural units.

2. Contract plans shall be supplemented by Contractor-provided working drawings submitted in accordance with Subsection 105.02.

705.02 -- Material Requirements

1. The materials used shall meet the requirements prescribed in Table 705.01.

Table 705.01

Material Requirements	
Applicable Material	**Section**
Concrete	1002
Admixtures	1007
Water	1005
Fine Aggregate	1033
Course Aggregate	1033
Fly Ash	1008
Spiral Reinforcing Wire	1023
Prestressed Steel Strand	1026
Post-Tensioning Assembly Steel	1025

2. The concrete strength~~class~~ used in the manufacture of precast or precast/prestressed structural units shall be shown in the plans.

3. The Contractor shall be responsible for the concrete mix design. Concrete Mix Designs shall be proportioned in accordance with ACI Standard 318 and the following additional requirements:

   a. The mix designs or change to a mix design shall be submitted for approval to the Engineer 4 weeks before beginning any concrete work. Refer to Table 705.03 for required testing for any mix design.

   b. Concrete shall consist of Type I, Type II, or Type III Portland cement, aggregate, air-entraining admixture, and water. Concrete may also contain Class C or Class F fly ash, Ground Granulated Blast Furnace Slag (GGGBFS) or Silica Fume and ASTM C 494 approved Type A, Type B, Type D, and Type F admixtures.

   c. No change shall be made in the approved concrete mix design during the progress of the work without the prior written permission of the Portland Cement

3.5.4 – Elastomeric Bearing

General

- Elastomeric bearings rely on the pad elastic properties in shear to allow translational and rotational movement of the bridge.
- Bridge Office Policy specifies the use of AASHTO LRFD Bridge Design Specifications elastomeric bearing design Method "A" because it has been concluded that Method "B" will rarely, if ever, be cost effective. The testing proceedure for Method "B" must be approved by the Assistant Bridge Engineer.
- The material testing required for bearings designed using Method B could result in higher allowable design stresses, that could produce smaller (less expensive) bearings, but savings in the cost of the bearing are generally more than offset by the cost of the material tests.
- NDOR Designers may use the Elastomeric bearing design spreadsheet in the bearing design spreadsheet Bearings (\\drapps\Bridge\Spreadsheets\Bearing Pad Design).

Design Criteria

- Bearings are designed using service loads (unfactored), without impact.
- For plain and reinforced elastomeric bearings, Designers shall specify 60 durometer elastomer on the plans and use a shear modulus of G = 130 psi for design.
- Minimum elastomer thickness for plain pads and internal layers of reinforced pads is 3/8 in.
- All internal elastomeric layers of reinforced bearings will be equal thickness.
- Minimum elastomeric cover layer thickness is ¼ in.
- Minimum steel shim thickness is 11 gage, grade (33-36) Article 14.7.5.3.5 of the AASHTO LRFD Bridge Design Specifications provides minimum steel shim thickness equations for both the service limit state and the fatigue limit state and an ultimate minimum thickness of 0.0625 inch..
- A minimum of (2) steel shims are required for reinforced bearings.
- Maximum total bearing thickness is 5 in. without Section Leader approval.

Horizontal Movement

- Elastomeric bearing pads designed as expansion bearings shall be designed for the sum of horizontal movements Δ_s due to all applicable sources (i.e. thermal, creep, shrinkage, etc.).

Rotation

Design for rotation in Method A is now implicit and no longer calculated and checked specifically.~~Plain and reinforced elastomeric bearings will be designed for a minimum rotation of 0.005 radians plus the dead load rotation when a beveled sole plate is not used. Bearings will be designed for a minimum rotation of 0.005 radians when a beveled sole plate is used.~~ A beveled sole plate is required when the girder slope equals for exceeds 1.0% (0.010 Radians). ~~The minimum rotation requirement accounts for construction tolerance and live load rotation.~~

Note:

See Elastomeric Bearing Design Example or General Bearing Policy for additional design information.

ELASTOMERIC BEARING DESIGN EXAMPLE

The following example explains the steps used in the design spreadsheet shown in 3.5.4 and illustrates the required design information and the proper sequence of design calculations for elastomeric bearing design.

Design example assumptions:

- Reinforced expansion bearing required for load and movement conditions
- ~~Slope of the girder at the centerline of bearing θ = 0.0075 radians~~
- Service dead load per bearing DL_s = 158 kips
- Service live load per bearing LL_s = 77 kips
- Total bearing load DL_s+LL_s P = 235 kips
- Design horizontal movement Δ_s = 1.25 in.

Determine the elastomeric shear modulus for 60 durometer elastomer.

G = 0.130 ksi AASHTO LRFD Bridge Design Specifications Table 14.7.6.2.-1/BOPP

Select a layer thickness for internal elastomeric layers.

h_{ri} = 0.5 in. (design option BOPP minimum = 0.375 in.)

Select elastomeric cover layer thickness.

h_{rc} = 0.25 in. (design option) AASHTO LRFD Bridge Design Specifications 14.7.6

$0.7h_{ri}$ = 0.7 * 0.5 = 0.35 in. 0.25 < 0.35 in. OK

Select number of internal elastomer layers to be used in design.

4 (design option)

Calculate total elastomer thickness.

$h_{rt} = 2h_{rc} + (4)h_{ri}$ = 2*0.25 + 4*0.5 = 2.5 in. AASHTO LRFD Bridge Design Specifications 14.7.6.3.4-1

Check elastomer thickness for allowable shear deformation.

$h_{rt} >= 2\Delta_s$ = 2*1.25 = 2.5 in. 2.5 in. = 2.5 in. OK AASHTO LRFD Bridge Design Specifications 14.7.6.3.4

Select a bearing length.

L = 12.00 in. (design option)

Select a bearing width.

W = 20.50 in. (design option)

Calculate design bearing area.

A = LW = 12.00*20.50 = 246 in^2

Calculate shape factors.

$S_I = LW/(2h_{ri}(L+W)$ = 12.00*20.50/(2*0.5(12.00+20.50)) = 7.569

AASHTO LRFD Bridge Design Specifications 14.7.5.1-1

Calculate average compressive stress due to total service load.

σ_s = P/A = 235 kips/246 in^2 = 0.955 ksi

Calculate average compressive stress due to service Dead Load.

$\sigma_d = DL_s/A$ = 158 kips/246 in^2 = 0.642 ksi

Calculate average compressive stress due to service Live Load

$\sigma_L = LL_s/A$ = 77 kips/246 in^2 = 0.313 ksi

Calculate allowable compressive stress.

σ_A = minimum (1.25 ksi, 1.25 GS) AASHTO LRFD Bridge Design Specifications 14.7.6.3.2-6/7

1.25 GS = 1.25*0.13*7.569 = 1.230 < 1.25 therefore σ_A = 1.230 ksi

$\sigma_s \leq \sigma_A$ = 0.955 < 1.230 ksi OK

Note: The design spreadsheet makes this check by comparing design bearing area to minimum allowable bearing area based on allowable compressive stress. This is done to aid the Designer when modifying bearing length and/or width.

Calculate elastomeric compressive strains.

$\varepsilon_{di} = \sigma_D / 4.86GS_i^2 = 0.642 / (4.86*0.13*7.569^2)) = 0.0144$

$\varepsilon_{Li} = \sigma_D / 4.8GS_i^2 = 0.313 / (4.8*0.13*7.569^2) = 0.0088$

$\varepsilon_{Ti} = \varepsilon_{di} + \varepsilon_{Li} = 0.0180 + 0.0088 = 0.0268$

Note: Designers may use the equations above, or AASHTO LRFD Bridge Design Specifications Figure C14.7.6.3.3-1 to determine the compressive strain "ε_{di}".

Calculate ~~initial~~ compressive deflection of an internal layer due to instantaneous live load and initial~~service~~ dead load at the service limit state.

$\Delta_{Tdi} = \varepsilon_{Tdi}h_{ri}$ = 0.0268~~144~~*0.5 = 0.0134~~072~~ ≤ 0.0~~97~~ hri = 0.0~~97~~*0.5 = 0.0435 AASHTO LRFD Bridge Design Specifications 14.7.6.3.3

~~Calculate allowable rotation for design.~~

~~$\theta_A = \sigma_s n / 0.5GS_i(L/h_{ri})^2 = 0.955*5 / 0.5*0.13*7.569(12/0.5)^2 = 0.0168$ Radians~~

~~Note: if $h_{re} \leq 0.5h_{ri}$ then n = design n + 1 (0.25 ≥ 0.5/2 therefore n = 4 + 1 = 5) AASHTO LRFD Bridge Design Specifications 14.7.6.3.5b~~

~~Calculate required rotation.~~

~~$\theta_r = \theta_{calc}$ + 0.005 Radians = 0.0075 + 0.005 = 0.0125 Radians (BOPP)~~

~~$\theta_r < \theta_A$ = 0.0125 < 0.0168 Radians OK~~

Determine allowable steel shim fatigue threshold.

ΔF_{TH} = 24 ksi AASHTO LRFD Bridge Design Specifications T6.6.1.2.5-3

Define steel shim grade.

F_y = 33 ksi AASHTO 16th Edition, interim 1997 Division II C18.4.1.1.2

h_s = 11 gage = 0.1196 in. (BOPP minimum)

Check minimum allowable steel shim thickness (h_s min.)

$h_s = 3h_{ri}\sigma_s/F_y$ = 3*0.5*0.955/33 = 0.0434 in. (service limit state)

$h_s = 2h_{ri}\sigma_L/F_{sr}$ = 2*0.5*0.313/24 = 0.0130 in. (fatigue limit state)

Use BOPP minimum h_s = 0.1196 > 0.0434 OK

Calculate total bearing height

$T = h_{rt} + (5)h_s$ = 2.5 + 5*0.1196 ~ 3.098 in.

Check stability

T < = L/3

3.098 < = 12.00/3 = 4.00 OK

Elastomeric Bearing Design

Project	Structure Number	Bearing Location

AASHTO Method A bearings are limited to a maximum out of parallelism + girder rotation of 0.01 radians.
A beveled sole plate must be used if design girder slope at the bearing exceeds 0.01 radians.

Bearing Type (P - plain, R - reinforced)		R				
Bearing Type (F - fixed, E - expansion)		E				
Service Dead Load (unfactored)	DL_s	158	kips			AASHTO
Service Live Load w/o impact (unfactored)	LL_s	77	kips			Article
Design Movement (65%TM+Creep+Shrinkage+etc.)	Δ_s	1.2500	in.			14.7.6.3.4
Shear Modulus (G = 0.130 for 60 Durometer Elastomer)	G	0.130	ksi			14.7.6.2
Cover Layer Thickness (0.25 in. minimum)	h_{rc}	0.25	in.	OK $h_{rc} <= 0.7\ h_{ri}$		14.7.6.1
Inner Layer Thickness (0.375 in. minimum)	h_{ri}	0.5	in.	OK $h_{ri} >= 0.375$		B.O.P.P.
Design Number of Inner Layers	n	4				
Number of Inner Layers AASHTO spec. checks	n	5		OK $S_i^2 / n < 20$		14.7.6.1
Total Elastomer Thickness	h_{rt}	2.5	in.	OK $h_{rt} >= 2\Delta_s$		14.7.6.3.4
Bearing Length	L	12	in.			
Bearing Width	W	20.5	in.			
Bearing Area	A	246	in.^2			
Minimum Area Required Due to Stress Limits	A_{min}	191	in.^2			
Shape Factor (inner layers)	S_i	7.569			S_i = LW/(2*hri*(L+W))	14.7.5.1
Allowable Compressive Stress	σ_A	1.230	ksi		σ_A = Min (1.25, 1.25GS)	14.7.6.3.2
Average Live Load Compressive Stress	σ_L	0.313	ksi		$\sigma_L = P_{LL}/A$	
Average Dead Load Compressive Stress	σ_d	0.642	ksi		$\sigma_d = P_{DL}/A$	
Average Total Compressive Stress	σ_s	0.955	ksi	OK $\sigma_s < \sigma_A$	$\sigma_s = P_{d+LL}/A$	
Average Total Compressive Strain (inner layer)	ε	0.0267	in./in.		$\varepsilon = \sigma_s / 4.8GS_i^2$	C14.7.5.3.6
Instantaneous LL + Initial DL Deflection of an Internal Layer	δ	0.0134	in.	OK $\delta <= 0.09\ h_{ri}$	$\delta = \varepsilon\ h_{ri}$	14.7.6.3.3
Fatigue Threshold	ΔF_{th}	24.0	ksi			14.7.6.3.7
Shim Steel Grade (BOPP grade 33-36)	F_y	33.0	ksi			B.O.P.P.
Shim Thickness (BOPP min 11 gage = 0.1196 in.)	h_s	0.1196	in.	OK $h_s >= 3h_{ri}\sigma_s/F_Y$ & $2h_{ri}\sigma_L/\Delta F_{TH}$		14.7.5.3.5-1&2
Total Bearing Height (includes shims)	T	3.0980	in.	OK $T <= L/3$		14.7.6.3.6

BEARING DESIGN MEETS ALL AASHTO & BOPP REQUIREMENTS

Spreadsheet created by Terry Holman, Nebraska Department of Roads Bridge Division, 3 / 3 / 98

Last Revision, March / 26 / 2014

Test Piles

Occasionally test piles will be specified by the Geotechnical Engineer to verify the design tonnage and length of the piling. The Geotechnical Engineer will specify which piles are to be the test piles and the Designer must specify these piles in the Test Pile Data Table, (AC=PILETES). In addition, the Pile Data Table attached to AC=PILETESAC=TPILE will be used to specify the tentative pile order lengths to calculate the quantities.

PILE DATA							
LOCATION	PILE NUMBER	CUT-OFF ELEVATION	MINIMUM PENETRATION BELOW CUT-OFF (feet)	TENTATIVE PILE ORDER LENGTH (feet)	PILE ORDER LENGTH (feet)	DESIGN PILE BEARING (kips/pile)	PILE TYPE

AC=PILETES

TEST PILE DATA				
LOCATION	PILE NUMBER	CUT-OFF ELEVATION	PILE ORDER LENGTH (feet)	DESIGN PILE BEARING (kips/pile)

AC=PILETES

Payment

The quantities for bearing piles will be the total length (ft) of pile shown on the Plans. Payment for bearing piles shall be as stated in the Standard Specifications for Highway Construction. See Pay Item Policy in Section 2.3.8 for Standard Pay Items that must be shown on the Front Sheet. Pay Items not published in Section 2 should be verified with the Geological Section before they are used in the Plans.

2.2.4 – Approach Slab Policy

General Design

Approach slabs will be required on all State projects. Plans and elevation views of approach sections should be shown on the General Plan and Elevation Sheet of Bridge Plans.

For bridges that are to be widened, the existing bridge and location should be investigated to determine any deviations from the standard approach layout.

Design Criteria

Approach Section

The approach section length shall be 20 ft. from the end of the bridge floor to CL grade beam; see Grade Beam Policy for more information. The approach section reinforcing details shall be as shown in Section 6 (6.12 thru 6.14), Approach Slab Base Sheets. The depth of the approach section shall be 14 in. and placed above the abutment wing; see Wing Policy for more information.

Paving Section

The paving section length shall be 30 ft. from CL grade beam to the road pavement along CL clear roadway. The joint between the paving section and the roadway shall be perpendicular to CL roadway. For wide bridges and/or large skew angles, Designers shall consult with the Assisant Bridge Engineer on a case-by-case basis.

The thickness of the paving section shall be 14 in. The reinforcing details shall be as shown in Section 6 (6.12 thru 6.14), Approach Slab Base Sheets.

If abutment wings extend beyond the grade beam, changing paving section layouts is not recommended.

Designers shall show elevations of the end of pavement sections at left edge, center and right edge.

Reinforcement Layout

Longitudinal bar spacing is always measured perpendicular to CL roadway and placement is parallel to the CL roadway. Designers should check longitudinal bar lengths to verify if the skew dictates a shorter bar. Field personnel indicated that omission of these slight skew adjustments have caused problems for joint installation. Transverse bar spacing is always measured parallel to CL roadway. Placement may be perpendicular to CL roadway or skewed.

Roadway Joint

When the roadway is concrete pavement, use 3 in. joint filler (Fiber Type) topped with ½ in. joint sealant and 1 ½ in. x 18 in. smooth tie bars at 12 in. centers. When the roadway is asphalt, no joint is required.

Expansion Joint

Joint systems will be placed between the approach section and paving section in the approach slab. For information on approved expansion joint systems, see Section 3.1.7, Expansion Device Policy.

TwoOne layers of SBS Modified Asphaltic Base Sheet placed on a steel troweled smooth surface will provide a bond breaker for bridge expansion between the approach section and the grade beam.

337 The Contractor must provide any temporary intermediate diaphragms and/or bracing necessary to provide lateral and torsional stability for the girders during post-tensioning and construction of the concrete slab. The temporary intermediate diaphragms/bracing shall be removed after the concrete slab has attained 75% of its design strength. The cost for furnishing, installing, and removing the temporary intermediate diaphragms shall be subsidiary to the Pay Item, "Class 47BD-4000 Concrete for Bridge".

Integral Abutments

341 No form work, reinforcing steel, or construction loads shall be placed on the girders (concrete girders need to be 30 days and have reached their design strength) until the abutment concrete has set for 72 hours or reached a minimum compressive strength of 2,000 psi.

Concrete Rehabilitation and Repair

350 All existing concrete surfaces to be in contact with the new construction shall be thoroughly roughened and cleaned before placing any new concrete.

351 Field bend and/or clip reinforcing bars to maintain minimum clearance. Epoxy coat clipped ends.

352 Chamfer all exposed edges of concrete.

353 The Contractor shall place a 1" deep saw cut at the limits of the removal to facilitate a clean, smooth line when breaking back existing concrete.

354 When breaking existing concrete, the use of a 15 lb. maximum hammer applied at a 45° angle is required to chip along the edges of removal, and a 30 lb. maximum hammer applied at a 45° angle is required for all other concretepavement removal.

355 "Class II Repair" and "Class III Repair" shall consist of removing broken, loose or unsound concrete from the bridge deck at the locations designated by the Engineer. "Class II Repair" shall be from the top of the concrete deck to the midpoint and "Class III Repair" shall be from the midpoint to the bottom of the deck. All exposed reinforcing steel shall be sandblaster clean.

356 When breaking existing concrete and existing reinforcing steel is encountered that is broken or has section loss due to corrosion greater than 20%, the Contractor shall lap the existing bar with a new epoxy coated bar of the same size a minimum of 2'.

357 An approved Bonding Agent shall be used prior to placing new concrete against any existing concrete.

358 Concrete placed during expansion joint repairs shall be allowed to cure at least 28 days prior to applying the Multi-Layer Epoxy Polymer Overlay.

359 Actual field conditions may require more or less repair than what is depicted in the plans. The final areas to be repaired shall be determined by the Engineer. The Bridge Office shall be notified when the field conditions impede the implementation of these plans or vary significantly from what is shown.

360 Existing unbroken concrete surfaces to be in contact with the new concrete shall be scarified as shown in Detail X on sheet XX of XX.

361 The minimum clearance, measured from the face of the concrete to the surface of any reinforcing bar, shall be 2", except where otherwise noted.

362 All reinforcing steel shall conform to the requirements of ASTM A615/A615M, Grade 60 steel.

3.5.9 – Bearing Shop Plan Policy

The Bridge Division will be responsible for confirming each applicable item is shown on the Bearing Shop Plans. Checkers should refer to the Standard Specifications and Special Provisions to identify which of the following items are required on a Bearing Shop Plan.

Sole Plates (Upper Assemblies)

1. Sole plates shall conform to the requirements of ASTM A 709 Grade 50W weathering steel.
2. As an alternate, the sole plate may be grade 36 steel, metallized. If the grade 36 alternate is used, all flame cut edges of the sole plate shall be ground to reduce hardness and facilitate blast cleaning. All corners of the sole plate shall be rounded to a 1/16-inch radius. All exposed plan steel surfaces shall be blast cleaned to a near white finish and zinc metallized with a minimum thickness of 8 mils. Zinc metallizing must be performed in accordance with American Welding Society Specification AWS C2.2.
3. An ASTM A 240 Type 304 stainless steel plate (minimum 70 mils to a maximum of 80 miles thickness) shall be attached to the lower surface of expansion bearing sole plates (not applicable to fixed bearing plates).
4. The stainless steel plate in contact with the PTFE sheet shall be polished or rolled to provide a Number B mirror finish.
5. The stainless steel plate shall be attached by welding around its full perimeter.
6. Welding may be done with the shielded metal arc welding process using an AWS E308L-15 electrode, the gas metal arc process using an AWS ER308L electrode, or the gas tungsten arc welding process using an AWS ER308L fillermetal.
7. The weld shall not extend into the area of contact between the upper and lower assemblies.

Bearing Pads (Lower Assemblies)

1. Bearing pads shall consist of a plain elastomeric pad (PEP), a steel-reinforced elastomeric pad, or a cotton duck reinforced elastomeric pad (CDP), conforming to the requirements of the current AASHTO LRFD Bridge Design Specifications, ~~and t~~The CDP shall conform toDepartment of Defense Specification MIL-C-882.
2. The lower assembly for CDP expansion bearings shall consist of a CDP pad with a 94 mil thick, low friction, virgin, unfilled, polytetrafluroethylene (PTFE) sheet bonded to the upper surface.
3. Bonding of the PTFE shall meet the peel test requirements (ASTM D903) of 25 lb/in at an angle of 180 degrees.
4. Bonding must be complete without air gaps under the PTFE sheet to seal out moisture and provide a smooth, flat slide surface.
5. The PTFE sheet shall conform to the requirements of the current AASHTO Bridge Design Specifications and these NDOR Standard Specications.

Flatness

1. Flatness shall be tested in accordance with Section 712 of the NDOR 1997 Standard Specifications.
2. The flatness tolerance for the PTFE sheet and the stainless steel plate shall be 0.0005 x "Nominal Dimension".

Bearing Design

SBS Modified Asphalt Base Sheet(s) may be used. Designers should consider using unreinforced elastomeric pads when the slope at the bearing would exceed 1% and unreinforced elastomeric pads and / or a 4" chamfer when the slope or skew might cause the girder to bear on the face of the substructure.

Strands

The maximum number of strands for the Inverted Tee bottom flange is 22 strands. Two additional top strands shall be tensioned to 2 kips/strand and shall not be accounted for in the design. All strands have a straight profile. With the permission of the Assistant Bridge Engineer, the top two strands can be tensioned up to 75% (but should not be cut) and / or the number of debonded strands increased beyond the AASHTO 25 / 40 % limits (an increase of less than 10% is recommended).

Intermediate Diaphragms

Intermediate diaphragms are required for the Inverted Tee girder bridges. A minimum of one diaphragm at midspan between the three outside girders is required. ~~Payment for the concrete diaphragms will be subsidiary to the Pay Item **"Class 47BD-4000 Concrete for Bridge"** (CY).~~

Bridge Base Sheet

There is a base sheet reference file for the Inverted Tee sections in Section 6 (6.40 thru 6.46).

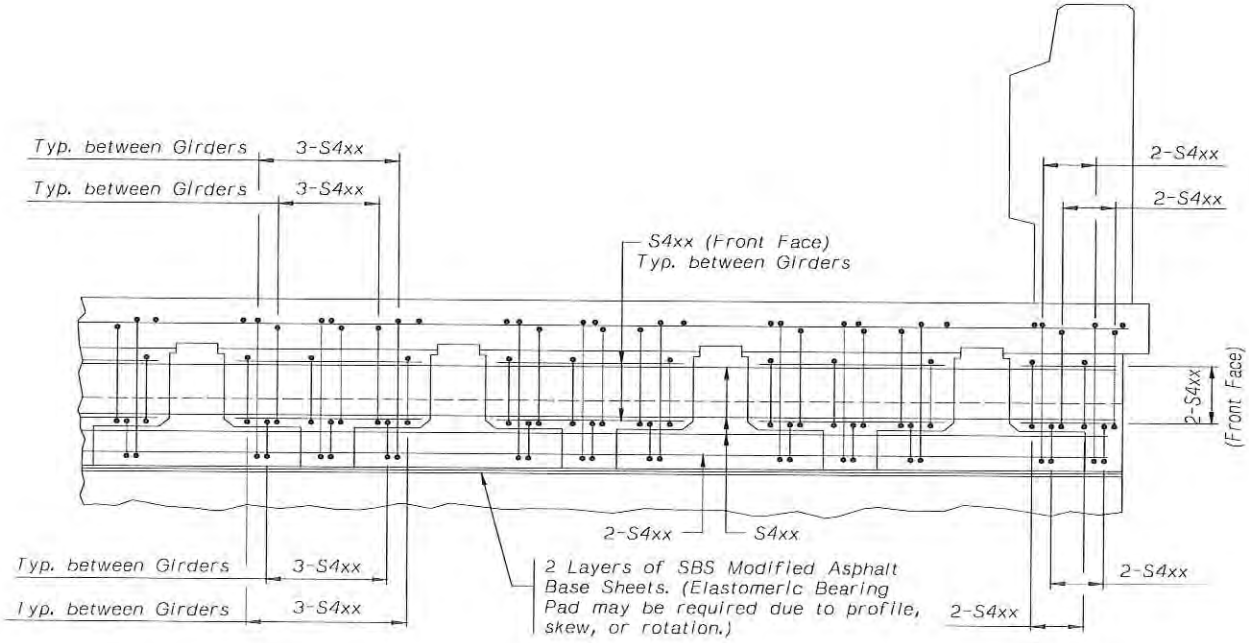

TYPICAL SECTION OF TURNDOWN

3.5.4 – Elastomeric Bearing

General

- Elastomeric bearings rely on the pad elastic properties in shear to allow translational and rotational movement of the bridge.
- Bridge Office Policy specifies the use of AASHTO LRFD Bridge Design Specifications elastomeric bearing design Method "A" because it has been concluded that Method "B" will rarely, if ever, be cost effective. The testing proceedure for Method "B" must be approved by the Assistant Bridge Engineer.
- The material testing required for bearings designed using Method B could result in higher allowable design stresses, that could produce smaller (less expensive) bearings, but savings in the cost of the bearing are generally more than offset by the cost of the material tests.
- NDOR Designers may use the Elastomeric bearing design spreadsheet in the bearing design spreadsheet Bearings (\\drapps\Bridge\Spreadsheets\Bearing Pad Design).

Design Criteria

- Bearings are designed using service loads (unfactored), without impact.
- For plain and reinforced elastomeric bearings, Designers shall specify 60 durometer elastomer on the plans and use a shear modulus of G = 130 psi for design.
- Minimum elastomer thickness for plain pads and internal layers of reinforced pads is 3/8 in.
- All internal elastomeric layers of reinforced bearings will be equal thickness.
- Minimum elastomeric cover layer thickness is ¼ in.
- Minimum steel shim thickness is 11 gage, grade (33-36) Article 14.7.5.3.5 of the AASHTO LRFD Bridge Design Specifications provides minimum steel shim thickness equations for both the service limit state and the fatigue limit state and an ultimate minimum thickness of 0.0625 inch..
- A minimum of (2) steel shims are required for reinforced bearings.
- Maximum total bearing thickness is 5 in. without Section Leader approval.

Horizontal Movement

- Elastomeric bearing pads designed as expansion bearings shall be designed for the sum of horizontal movements Δ_s due to all applicable sources (i.e. thermal, creep, shrinkage, etc.). Use 65% of temperature movement (TM Section 2.2.6) for the horizontal thermal.

Rotation

Design for rotation in Method A is now implicit and no longer calculated and checked specifically. A beveled sole plate is required when the girder slope equals for exceeds 1.0% (0.010 Radians).

Note:

See Elastomeric Bearing Design Example or General Bearing Policy for additional design information.

3.6.4 – Pedestrian Railing (Chain-Link Type)

Layout

The Bridge Division's current policy is to provide an 8 ft. - 3 in. high, curved chain-link fence on all bridges that are over traffic or railroads. This is to provide protection from falling debris for the traffic below. Chain-link fence will be a straight 5 ft. high section when bridges are not over traffic or railroad. All fence layouts should be located on the bridge using dimensions from the end(s) of the bridge floor at the CL of the fence. The maximum post spacing will be 8 ft. for all posts. For consistent bracing details, the first 8 ft. post spacing of the 8 ft. - 3 in. high pedestrian rail will remain unchanged and the second post spacing should vary to accommodate any odd lengths required.

Expansion Joints

Expansion joints will be provided in the top rail and handrail at all bridge expansion locations in the bridge deck. Typical fence bracing should be provided on both sides of expansion joints.

Expansion gaps should be designed for a fixed dimension (i.e., no adjustments for temperature at time of installation). Expansion gaps greater than 2 in. should use a longer pipe on the inside of the joint. All expansion gap information must be added to the base sheet by the Designer. It is not shown by default, since there is not an expansion joint required in the base sheet fence layout.

Base Sheets

One base sheet is currently available for the 8 ft. - 3 in. high pedestrian rail (chain-link type) which has 5 ft. high sections at the ends. Alternate sketches level 50 for New Jersey section and level 51 for Closed Concrete Rail. See Section 6 for base sheet information. The following minimum information will be provided in the base sheets.

1. The clear dimension of the sidewalk should be indicated on the "Typical Section Thru Fence".
2. "Typical Section Thru Fence" will indicate the proper traffic barrier used on the bridge project.
3. The fence layout will indicate the odd post spacing and number of 8 ft. spaces.
4. The Limits of Pay Quantity for **"Pedestrian Railing (Chain-link Type)"** (LF) will equal the sum of the dimensions shown for the fence.
5. The expansion gap distance should be shown in the "Expansion Joint or Splice Detail" when required. This information should be placed with the note for intermediate splice dimensions.

Payment

Measurement will be indicated on the plans as the distance between the outermost CL of the fence posts (1¼ in. diameter pipe), measured along the CL fence (as shown on the base sheet). If fences of different lengths are required on the same bridge, the pay quantity should indicate the different lengths on the base sheet. The total fence length required for the bridge project will be shown in the bridge "Quantities" on the Front Sheet.

8 ft. - 3 in. high chain-link fence, which includes 5 ft. high-end sections, will be paid for using the standard Pay Item number 6404.00, **"Pedestrian Rail (Chain-link Type)"** (LF).

5 ft. high chain-link fence will be paid for using the standard Pay Item number 6404.02, **"Pedestrian Rail (Chain-link Type)"** (LF).

2.1.6 - Bridge Quantity Tolerance Policy

Tolerances

Excavation

Excavation (Established Quantity)	5.0	CY
Earthwork Measured in Embankment	10.0	CY

Concrete

All Concrete Quantities	0.1	CY
Class I Repair	1.0	SY
Class II Repair	1.0	SY
Class III Repair	1.0	SY
Concrete for Overlay – SF	0.1	CY
Placing, Finishing & Curing Concrete Overlay – SF	1.0	SY

Steel

Epoxy Coated Reinforcing Steel	5.0	LB
Structural Steel	5.0	LB
Bearing Piles	1.0	LF
Sheet Piles	1.0	SF

Slope Protection

Broken Concrete Riprap	5.0	TON
Rock Riprap, Type "A"	5.0	TON
Rock Riprap, Type "B"	5.0	TON
Rock Riprap, Type "C"	5.0	TON
Concrete Slope Protection	1.0	SY
Riprap Filter Fabric	1.0	SY

Miscellaneous

Bridge Deck Grooving	5.0	SY
Bridge Joint Nosing	0.1	CF
Railings (Including Chain Link Fence)	1.0	LF
Salvaging and Placing Topsoil	5.0	SY
Granular Backfill	5.0	CY
Subsurface Drainage Matting	1.0	SY
All Expansion Joints (not joint filler)	0.1	LF
All Conduit in Bridge	1.0	LF

Twin Structures

All twin structures must have the pay quantities separated for each structure.

2.3.2 – Rolled Beam Girder Bridge Notes

Grade 36

101 All structural steel shall conform to the requirements of ASTM A709/A709M, Grade 36.

102 All other structural steel shall conform to the requirements of ASTM A709/A709M, Grade 36.

Grade 50

111 All structural steel for rolled beams and all splice material shall conform to the requirements of ASTM A709/A709M, Grade 50.

Weathering Steel

121 All structural steel for rolled beams, stiffeners, separators and all splice material shall conform to the requirements of ASTM A709/A709M, Grade 50W weathering steel.

122 Nuts, bolts, and washers used in the assembly of weathering steel shall be Type 3.

Fabrication

131 All bearing stiffeners and girder ends, except at field splices, shall be vertical after final erection. All other stiffeners and all field splices shall be normal to the top flange.

132 During girder fabrication, the flanges at the splice must line up within 1/8" of parallel to the adjacent flanges without applying external force, before the splice is drilled.

134 All rolled beams and splice plates shall be considered main tension members for the purpose of Charpy-V-Notch tests.

135 All rolled beams shall be placed with mill camber upwards.

137 The Contractor may eliminate any bolted field splice by extending the heavier of the beams so connected. The Contractor shall make all necessary adjustments in bearings and bearing seat elevations caused by these changes. These changes and a revised blocking diagram shall be shown on the shop plans and will be subject to approval by the Engineer. No change in contract price or quantities will be made for this change.

Field Assembly

151 All fasteners shall be 7/8" Φ high strength bolts, ASTM A325.

152 Field tack welding of form hangers or miscellaneous hardware to any part of the steel girder, with the exception of the shear connectors, shall be prohibited.

153 When assembling the girders, they shall be set according to the blocking diagram before any bolts are tightened to a snug-tight condition.

154 Field splices shall be clean and free of all foreign matter before field assembly. The plates shall be in full contact when the bolts are tightened to a snug-tight condition.

155 The girders for this bridge are not designed to resist any torsional or lateral forces due to temporary construction loads. The Contractor must provide any temporary bracing necessary to support the girder web and flanges against all torsional or lateral forces resulting from construction loads.

156 The shim shots may be taken before or after the turndowns and diaphragms are poured.

157 7/8" Φ x 0' – 5" end welded stud shear connectors have an in-place weight of 98.0 lb. / 100 studs.

158 Steel (weight) quantities are based upon 490 pcf and 1 lb. per bolt.

136 Intermediate stiffener plates shall alternate on both sides of the web, at intervals shown, for interior girders. At exterior girders, intermediate stiffeners shall be placed only on the inside of the web plate.

Field Assembly

151 All fasteners shall be 7/8" Φ high strength bolts, ASTM A325.

152 Field tack welding of form hangers or miscellaneous hardware to any part of the steel girder, with the exception of the shear connectors, shall be prohibited.

153 When assembling the girders, they shall be set according to the blocking diagram before any bolts are tightened to a snug-tight condition.

154 Field splices shall be clean and free of all foreign matter before field assembly. The plates shall be in full contact when the bolts are tightened to a snug-tight condition.

155 The girders for this bridge are not designed to resist any torsional or lateral forces due to temporary construction loads. The Contractor must provide any temporary bracing necessary to support the girder web and flanges against all torsional or lateral forces resulting from construction loads.

156 The shim shots may be taken before or after the turndowns and diaphragms are poured.

157 7/8" Φ x 0' – 5" end welded stud shear connectorss have an in-place weight of 98.0 lb. / 100 studs.

158 Steel (weight) quantities are based upon 490 pcf and 1 lb. per bolt.

Steel Girder Repair

400 Girder Repair shall consist of straightening flanges, webs and cross-frames to within ½" of their original position. Straightening may be done by heating, mechanical means, or a combination of both. Gouges shall be ground so that no sides are steeper than 10:1. Areas where the paint is damaged or gets damaged during the repair process shall be cleaned and repainted in accordance with the Nebraska Standard Specifications for Highway Construction using paint from the NDOR Approved Products List. The color of the finish coat shall be a near match to the existing color.

401 The Contractor shall follow the heat application procedures on sheet XX of XX.

402 District personnel and the Contractor shall inspect the existing bottom and top flange web welds to verify there is no damage to those welds. District personnel will contact the Bridge Division if any weld damage is noted.

403 Existing girders and stiffeners are Grade 50 steel. Existing cross-frames are Grade 36.

2.3.5 – Structural Steel Notes

Payment

410 The Pay Item, "Structural Steel for Substructure", shall include the tie rods and nose angles at the piers.

Material Specifications

411 Tie rods shall conform to ASTM A709/A709M Grade 36 Steel. Turnbuckles shall conform to ASTM A668/A668M, Class C.

412 After fabrication, nose angles at the piers shall be galvanized according to ASTM A123/A123M.

413 Structural steel for all "H" piles shall conform to ASTM A 709/A 709M, Grade 36.

414 After fabrication, tie rods, turnbuckles, and all other hardware shall be galvanized according to ASTM A123/A123M.

101 All structural steel shall conform to the requirements of ASTM A709/A709M, Grade 36.

Shear Connectors

End welded stud sShear connectors shall be 7/8 in. diameter and meet the requirements of the current AASHTO LRFD Bridge Design Specifications. The Shear Connector Detail shown, (AC=SHEAR1) will be provided on all Plans.

Stud Diameter inch	Weight (Lb) of 100 studs having in-place length of				
	3 in.	4 in.	5 in.	6 in.	7 in.
1/2	21.0	27.0	33.0	39.0	45.0
5/8	33.6	43.2	52.8	62.4	72.0
3/4	49.0	61.5	74.0	86.5	99.0
7/8	64.0	81.0	98.0	1150	132.0

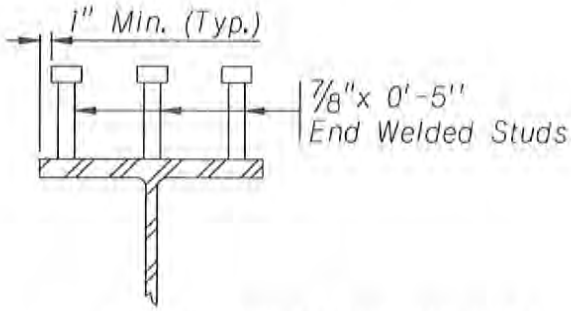

SHEAR CONNECTOR DETAIL

When Shear Connectors (Studs) are field applied, the following notes shall apply:

The Bridge Office shall be notified a minimum of one week prior to the application of the field welded studs.

Stud welding shall be accomplished in accordance with the AWS D1.5 Standard Specifications, Section 7.

All stud welding shall be done by a certified stud welder. At the time of stud welding, the studs and base metal shall be free from rust, rust pits, scale, oil, moisture, falling rain or snow, and any other foreign material. Areas must be wire brushed or cleaned by grinding before any welding can occur.

Any studs that do not exhibit a 360° collar must be repaired by a SMAW fillet weld (E8018-C3 Electrode) and the repair shall extend 3/8" beyond each end of the missing collar.

Mill Certification for the studs shall be submitted to the Engineer.

AC=SHEAR1

3.4.6 – Rolled Beam Girder Policy

Blocking Diagram

Rolled beams will not be cambered unless authorized by the Bridge Engineer. Therefore, Camber Ordinates at the span quarter points will not generally be provided on the Plans. A Blocking Diagram must be provided on the girder sheets as outlined below.

- The Blocking Diagram must provide ordinates at all end supports where the superstructure is discontinuous and at all field splices. The Blocking Ordinates will match the grade offsets at the field splice locations.
- The placement (upward or downward) of the mill camber must be specified on the Blocking Diagram. The computer program, NDOR Camber, is available for "in house" designs to check the vertical offsets between grade and a straight line between field splices. The offset will determine mill camber, end welded stud shear connectorstud length and girder seat adjustments. The Deflection Ordinates output determines end welded stud shear connector length and girder seat adjustments. The Deflection Ordinates output provided by NDOR Camber must not be used as the dead load deflection for shims.
- Since a straight line is assumed between the Blocking Ordinates, the girder seat elevations at the piers (or bents) may need to be adjusted accordingly.
- A table(s) indicating the deflection for shims and the Blocking Ordinates must be shown in the Plans. Camber and Blocking Ordinates shall be in feet, inches, and fraction of inches. Shims may be in decimals of inches.

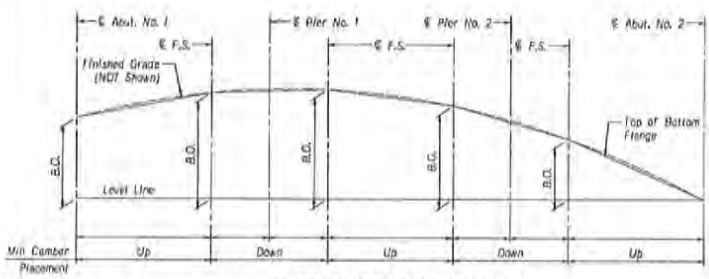

ROLLED BEAM BLOCKING DIAGRAM

Deflection & Blocking		
Location Span 10th points	Blocking Ordinate (in.)	DL Deflection for Shims (in.)
Abut.	0	0
.1		xx
.2		xx
.3		xx
FS No.	xx	
.4		xx

Shims

Plans must indicate the expected shim at the supports as shown in the cell AC=SHIMRB. The minimum shim for rolled beams is the distance from the top of the thickest top flange to the finished grade. The minimum shim must provide ½ in. clear between the top flange and the bridge deck. This provides a ½ in. construction tolerance and a minimum shim at these locations. Field splice top plates may be embedded in the deck no more than 1 in.

Quantities

Quantities for the rolled beam shall be based on the plf provided by AISC. Other structural steel quantities for the girder shall be based on 490 pcf. 1 lb. will be used as the weight per bolt.

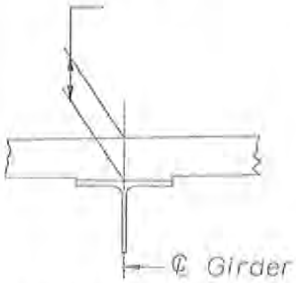

SHIM DETAIL
AC=SHIMRB

SECTION 1.2 – RAILROAD GRADE SEPARATION

1.2.1 – Railroad Policy

The information in this policy is based on the BNSF Railway – Union Pacific Railroad, Guidelines for Railroad Grade Separation Projects and written correspondence with both companies.

Plan Submittals to Railroad (RR)

Preliminary Design

When the preliminary layout (TS&L -Type, Size & Location) has been determined, the TS&L will be submitted to the Railroad Liaison for approval. The submittal should include a Plan View (including the Railroad's Right-of-Way), an Elevation View showing the layout criteria, and the Bridge Cross-Section.

Final Design

Final Plans (4 copies) shall be submitted to the Railroad Liaison for approval.

Layout Criteria

The following sketch illustrates the general layout criteria for UPRR & BNSF.

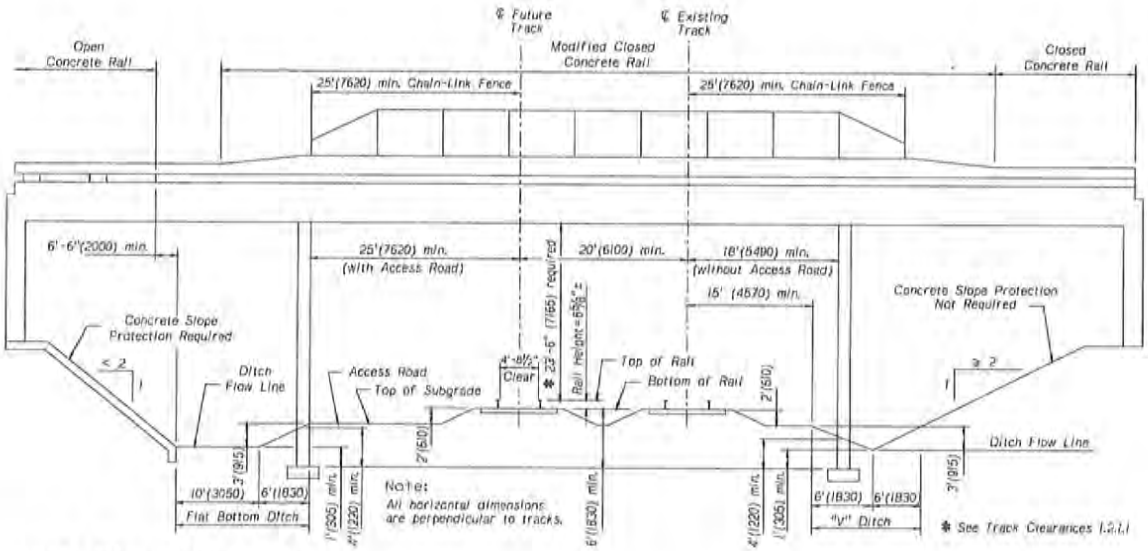

Concrete Slope Protection

Concrete slope protection shall be provided for all slopes.

Future Tracks

UPRR or BNSF may require space be provided for additional future tracks or access roads. Additional clearance may be required for future adjustments in track sag or vertical curve or if future track may be changed for flood considerations. This information should be obtained by the Bridge Division through the Railroad Liaison from UPRR or BNSF before the TS&L stage of planning.

Note: For future tracks, the horizontal spacing between two tracks shall be measured at a right angle from the centerline of the tracks ~~shall be 25 ft.~~ The spacing shall be 20 ft. for freight tracks and 25 ft for commuter tracks.

- Bridge Deck Drainage

  When floor drains are required, a flat bottom ditch will be required by the Railroad to carry any increased drainage from the embankment slope. The Bridge Designer shall take the necessary precaution to minimize erosion and prevent erosion deposits from building up in the ditch. This will interfere with the proper track ballast drainage and lead to settlement of the tracks.

Railroad Barriers

Bridges without sidewalks

BNSF & UPRR: As a minimum, a 3 ft. - 6 in. high closed modified concrete rail with a chain link fence extending 9 ft. - 6 in. above the bridge deck shall extend to the limits of the Railroad Right-of-Way or a minimum of 25 feet beyond the centerline of the outermost existing track, future track, or access road, whichever is greater. Fence is not required past the end of floor. See Railroad Base Sheets in Section 6 (6.71 – 6.75).

In locations where switching or other frequent railroad activities are performed, Union Pacific and Burlington Northern Santa Fe may have additional special requirements.

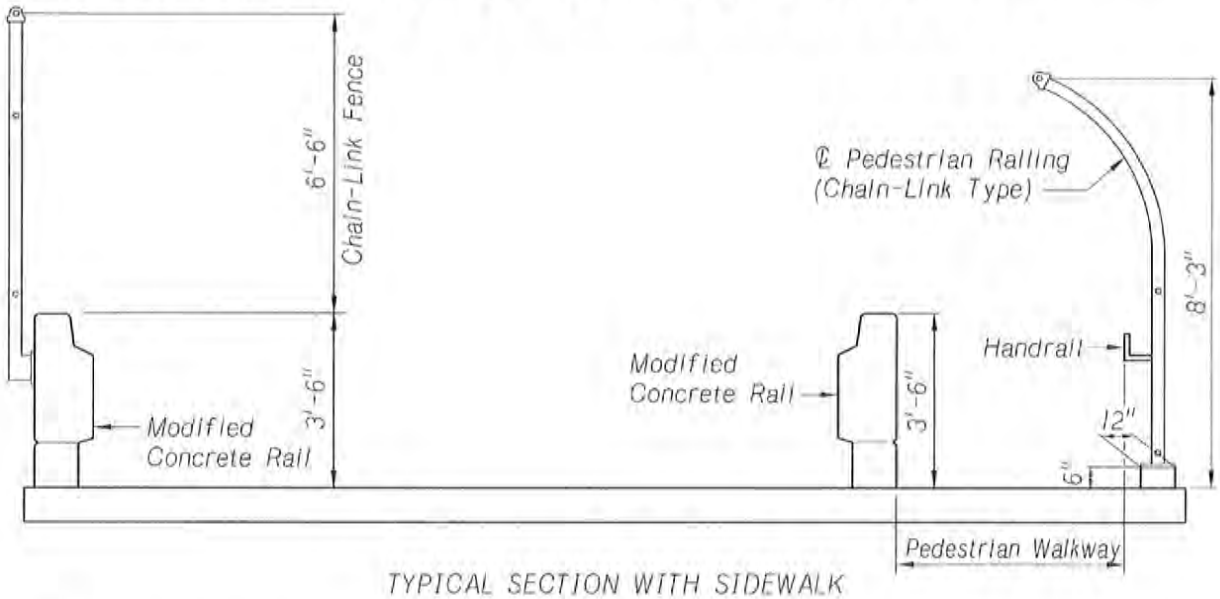

TYPICAL SECTION WITH SIDEWALK

Footings

The top of the footings will be a minimum of 6 feet below the base of the track rail, 4 feet below the natural ground, and a minimum of 1 foot below flow line of ditches for footings located within 25 feet of the centerline of track.

Lighting

Lights are to be installed on the underside of the viaduct for bridges over 80 ft. in width.

Pier Protection

Adjacent to Railroad Tracks

All structures shall comply with the current edition of the American Railway Engineering and Maintenance-of-Way Association Manual for Railroad Engineering (AREMA) requirements for pier protection walls.

~~Piers shall be checked for the collision force specified in the AASHTO LRFD Bridge Design Specifications.~~

SECTION 2.3: STANDARD NOTES

2.3.1 - General Notes

001 This structure is designed in accordance with the AASHTO LRFD Bridge Design Specifications, Seventh~~ixth~~ Edition, including subsequent interim revisions.

002 The concrete bridge deck is designed by the empirical design method.

003 The superstructure is designed for the allowance of stay-in-place forms (5 lb./ft^2) between girders.

004 The girders and substructure are designed for a future wearing surface of 20 psf.

005 The Contractor may substitute any one of the alternate designs shown on the plans for the original design. All quantities are based on the original design and no additions or deductions will be allowed for the use of an alternate design.

006 All dimensions shown are in horizontal plane only. No allowances have been made for vertical curve or roadway cross slope.

007 The existing structure was built under project _____, dated __/__/__. Plans are available from the Bridge Division upon request.

008 The **(Utility Company)** shall furnish all PVC sleeves, conduit, inserts, and hardware required for the utility attachment to the bridge. All material to be installed by the Bridge Contractor shall be delivered to the bridge site by the utility company within 72 hours after notification from the Bridge Contractor. The contact person for the **(Utility Company)** Is Mr. XXXXX and can be reached at (XXX) XXX-XXXX.

009 The Contractor shall install the sleeves and inserts as shown on the plans. The Contractor shall install the conduit from the face of the abutment to the toe of the slopes under the approach slabs but will not be required to install the hangers and conduit between abutments. The installation by the Bridge Contractor will not be paid for directly but shall be subsidiary to the Pay Item, "Class 47BD-4000 Concrete for Bridge".

010 Girder shims that will be provided to the Contractor account for the dead load deflection due to weight of the slab, rail or barrier, and median (if present) only. The Contractor is responsible for making the necessary adjustments for the particular forming system used to achieve the slab grades and elevations shown on the plans.

011 The Pay Item, "Excavation (Established Quantity)" shall include the channel excavation/fill through the bridge as shown on the plans.

012 The Pay Item, "Earthwork Measured in Embankment" shall include the channel excavation/fill through the bridge as shown on the plans.

013 Top soil shall be placed on riprap as shown in the riprap details.

014 The finishing machine shall be supported by the girders of the phase that is being poured. When closure pours are requirred, the bridge finishing machine shall be supported on the completed Phase I and Phase II slabs, straddling the closure pour opening to pour the Phase III concrete.

015 Shop plans required for review (Designers shall only list those that apply).

Steel Superstructure

Prestressed Concrete Superstructure

Superstructure Steel (Diaphragms / Separators / Etc.)

Substructure Steel (Armor Angles / Tie Rods / Etc.)

Steel Sheet Piling

3.1.7 – Expansion Device Policy

General

- Horizontal Movement due to thermal effects (TM) for expansion joints shall be calculated in accordance to the Temperature Movement Policy in Section 2.2.6.
- Strip Seals and Deck Joint Seals shall be used in bridge decks.
- Typical joint details for the joint systems are shown on the Approach Slab Base Sheets (see Section 6, 6.12 thru 6.14).
- Strip seals or modular joints shall be used for all expansion joints on bridge decks.

Approach Slab Expansion Devices

The following types of expansion devices shall be specified by the Bridge Designer based on the Temperature Movement (TM) required at the joint location.

Preformed Joint Filler

Preformed joint filler joints may be specified for TM $\leq$ ½ in. Preformed joint filler, when used as approach slab expansion device, is subsidiary to the Pay Item, "Concrete for Pavement Approaches Class 47BD-4000".

Preformed Expansion Joint

Preformed Expansion Joints may be specified for joints with a Temperature Movement range of ½ in. < TM $\leq$ 2 ½ in. and shall meet the requirements of the Preformed Expansion Joint Special Provision. Temperature Movement in the range of 1 in. < TM ≤ 2 ½ in. shall call for a Type A Joint. TM ≤ 1 in. shall call for a Type B joint. A table will be shown on the plans to provide the contractor with the appropriate joint width to construct based upon the anticipated temperature at the time of pour. See Section 3.1.8 (Concrete Expansion Tables) and 3.1.9 (Steel Expansion Tables) for data.

The Pay Item for this joint system shall be **"Preformed Expansion Joint (Type A or B)"** (LF).

The Preformed Expansion joint may be either a Precompressed Polyurethane Foam joint (PPF) or a Preformed Silicone joint.

Strip Seal

Strip seals shall be specified for 2 1/2 in. < TM $\leq$ 4 in.; and shall meet the requirements of Section 730, "Strip Seals" in the Standard Specifications. Block outs must be provided for installation. All installations must call for a 50 °F. median temperature with a 1/8 in. gap variation for every Y °F. All strip seals shall be paid for by using the Pay Item, **"Strip Seal"** (LF).

Silicone Joint Sealer

Silicone Joint Sealer may be specified for rehabilitation projects to seal existing or new joints on or at the end of decks approximately 2 in. or less in width.