GENERAL HIGHWAY MAP

KIMBALL COUNTY

NEBRASKA

PREPARED BY THE

DEPARTMENT OF ROADS

GIS/MAPPING SECTION

IN COOPERATION WITH THE

U.S. DEPARTMENT OF TRANSPORTATION

FEDERAL HIGHWAY ADMINISTRATION

2014

SCALE: 0–5 MILES / 0–8 KILOMETERS

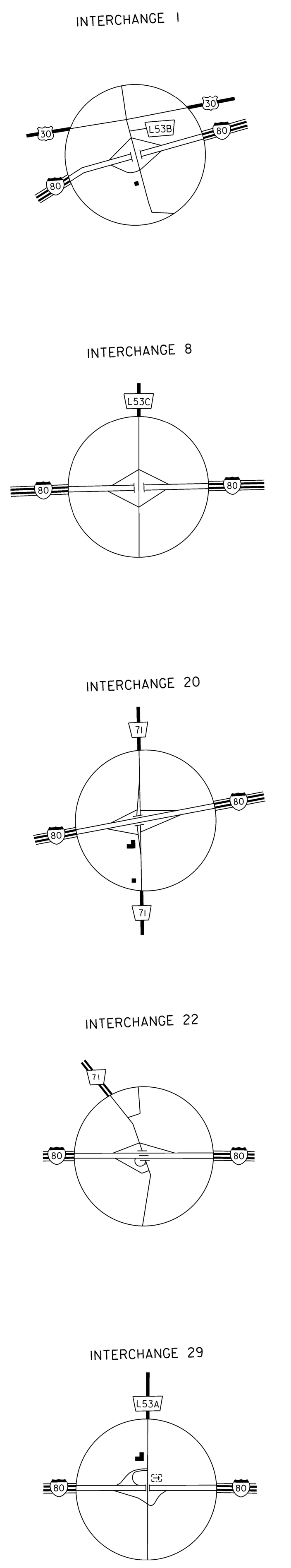

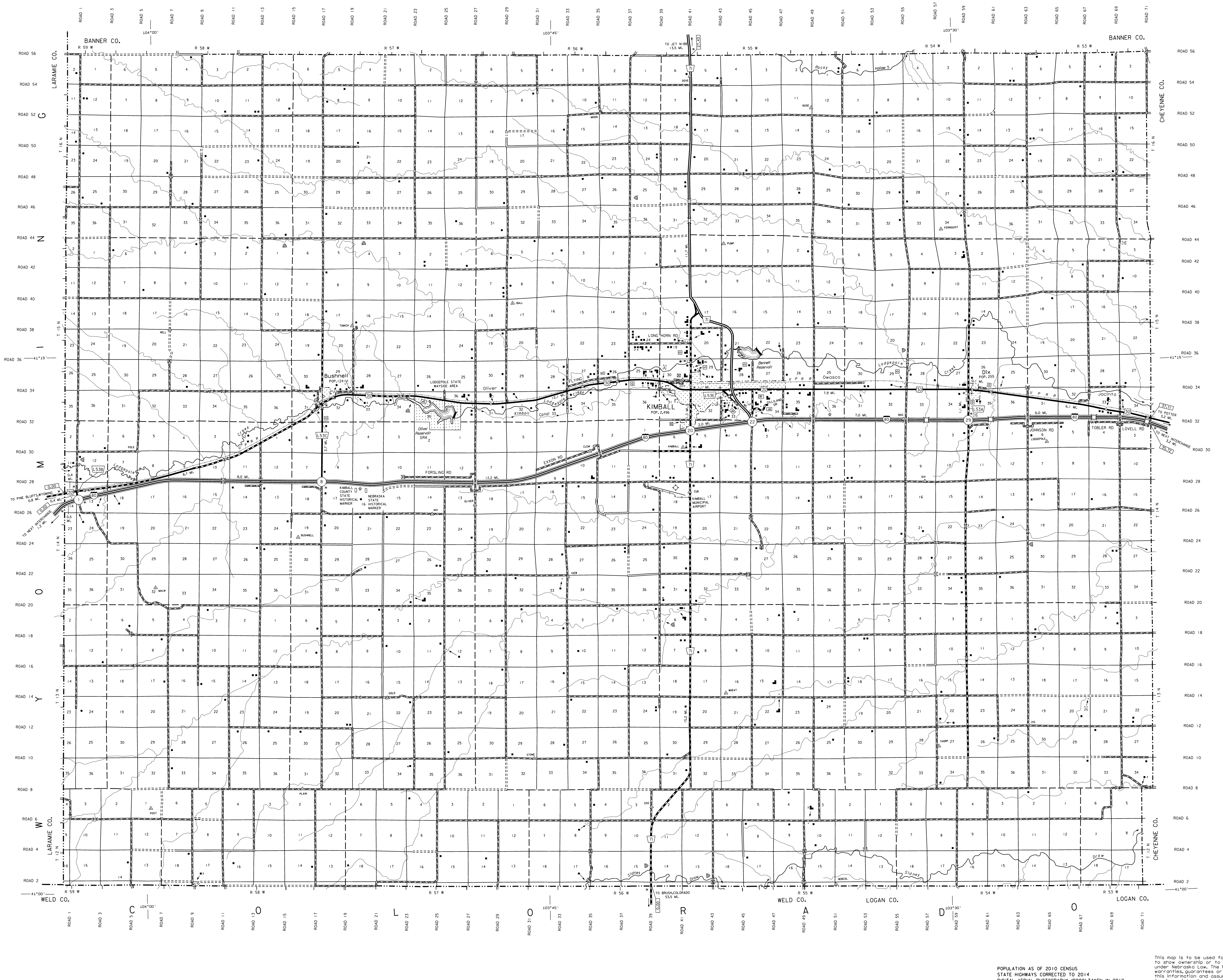

REVISION HISTORY

DATE	REVISION
SEPTEMBER 2014	COUNTY SUPT.
FEBRUARY 2012	911 SYSTEM

LEGEND

- Primitive Road
- Unimproved Road
- Gravel or Crushed Rock
- Asphalt/Bituminous Surface
- Multiple Lane Undivided Highway Asphalt/Bituminous Surface
- Concrete/Brick Surface
- Multiple Lane Undivided Highway Concrete/Brick Surface
- Divided Highway
- Interstate Highway with Full Control of Access
- Side Roads and Streets
- 911 Named/Numbered Roads ... ADAMS ROAD
- Interstate-Numbered Highway
- US-Numbered Highway
- State-Numbered Highway
- State-Numbered Highway Spur
- State-Numbered Highway Link
- Highway Reference Post Number
- Interstate Exit Number
- Wide Stream
- Narrow Stream
- Irrigation Ditch
- Reservoir, Pond or Lake
- Reservoir, With Dam
- Highway Bridge-Any Type (over 20' span)
- Small Bridges-Closely Spaced
- General Bridge
- Arch Bridge
- Truss Bridge
- Pedestrian Underpass
- Pedestrian Overpass
- Railroad Overpass
- Railroad Underpass
- Railroad
- Dam with Road on Top
- Cattle Guard
- Dwelling
- Row of Dwellings
- Cemetery
- Church or Other Religious Institution
- Church with Cemetery Adjacent
- Hospital
- Business
- Industrial Plant
- Filling Station
- Grain Elevator
- Aggregate Pit
- Agricultural Experimental Station
- Educational Institutions
- Public Use Area (camp site, picnic ground, swimming pool, etc.)
- Recreational Facilities (athletic field, country club, fairground, etc.)
- Rest Area
- Ranger Station
- Fish Hatchery
- Community Hall
- Correctional Institution
- Tourist Court or Motel
- Monument-Small
- Museum
- Firestation
- Courthouse
- Armory
- Post Office
- Highway Maintenance Yard
- Dump Area
- Sewage Disposal Plant
- Water Supply Stand Pipe
- Radio or TV Station
- Weight Station or Port of Entry
- Commercial or Municipal Airport
- Airport with Paved Runways
- State Boundary
- County Boundary
- Township Line
- Section Line
- Corporate Limit Lines
- Parks and Other Reservations
- Boundary Limits of Area Shown in Enlargements
- State Capital
- County Seat
- Other Cities and Villages
- Incorporated City or Village
- Triangulation Station
- Points Between Which Distances Are Measured Indicated Thus
- Latitude and Longitude

LAMBERT CONFORMAL CONIC PROJECTION
1983 NORTH AMERICAN DATUM
NEBRASKA COORDINATE SYSTEM

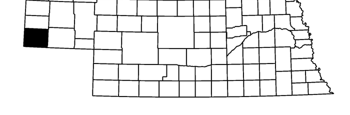

KEY TO COUNTIES

POPULATION AS OF 2010 CENSUS
STATE HIGHWAYS CORRECTED TO 2014
DIGITAL AERIAL PHOTOGRAPHY (DOQQ) TAKEN IN 2012

This map is to be used for information only and is not intended to show ownership or to be definitive on which roads are public under Nebraska Law. The Nebraska Department of Roads makes no warranties, guarantees or representations for the accuracy of this information and assumes no liability for errors or omissions. Any inconsistencies should be reported to NDOR.

Nebraska Department of Roads

www.transportation.nebraska.gov